City of Windcrest

AGENDA
DEPARTMENT HEAD REPORTS AT 5:00 PM
CITY COUNCIL MEETING AT 6:00 PM
APRIL 21, 2025

CITY COUNCIL CHAMBERS - 8601 MIDCROWN **DHR @ 5 PM/CCM @ 6 PM**

NOTICE IS HEREBY GIVEN THAT THE CITY OF WINDCREST CITY COUNCIL WILL HOLD A REGULAR CITY COUNCIL MEETING AT WINDCREST CITY HALL LOCATED AT 8601 MIDCROWN, WINDCREST, TEXAS ON MONDAY, APRIL 21, 2025, STARTING AT 6:00 PM. DEPARTMENT HEAD REPORTS WILL BE HEARD AT 5:00 P.M.

THE CITY COUNCIL RESERVES THE OPTION TO RECESS THE MEETING DURING THE EVENING OF MONDAY, APRIL 21, 2025, AND TO RECONVENE THE MEETING ON THE FOLLOWING BUSINESS DAY, TUESDAY, APRIL 22, 2025, AT 9:00 A.M. AT THE WINDCREST CITY HALL, 8601 MIDCROWN, WINDCREST, TEXAS.

NOTICE OF ASSISTANCE AT THE PUBLIC MEETING

The City of Windcrest Council Chambers are wheelchair accessible, and accessible parking spaces are available. In compliance with Americans with Disabilities Act, the City of Windcrest will provide reasonable accommodations for persons attending the meeting. To better serve you, requests should be received 48 hours prior to the meeting. Please contact the City Secretary's Office, at 210-655-0022 ext. 2150 or Fax 210-655-8776, or 711 Texas Relay.

I. CALL TO ORDER

II. ROLL CALL

III. PLEDGE OF ALLEGIANCE AND INVOCATION

IV. MONTHLY DEPARTMENT HEAD REPORTS FOR MONTH OF MARCH FY24-25

a) Briefing and discussion on the monthly Fire Department reports for the month of March, to include Summary of Calls along with response times for the City, County, and Annex area. [Ivan Hernandez, Fire Chief]

b) Briefing and discussion on the monthly Windcrest Volunteer Fire Alliance financial report for the month of March. [WVFA Representative]

c) Briefing and discussion on the monthly Police Department reports including Code Enforcement and Animal Control reports for the month of March. [David Ellis, Interim Chief of Police]

d) Briefing and discussion on the monthly Municipal Court report for the month of March. [Claudia Carrera, Municipal Assistant Court Administrator]

e) Briefing and discussion on the monthly Public Works reports for the month of March. [Dusty DeHoyos, Public Works Director]

f) Briefing and discussion on the monthly City of Windcrest Economic Development Corporation report for the month of March. [Mario Hernandez, Director of Windcrest Economic Development Corporation]

g) Briefing and discussion on the monthly Office of the City Secretary, Civic Center and special events reports for the month of March. [Rachel C. Dominguez, City Secretary]

THE FOLLOWING ITEMS MAY BE CONSIDERED AT ANY TIME DURING THE REGULAR COUNCIL MEETING:

V. CITIZENS TO BE HEARD/CITIZEN PARTICIPATION

• Citizens may address the Windcrest City Council on topics not on the agenda for no more than three (3) minutes.
• Citizens shall also have the opportunity to address the Windcrest City Council during consideration of posted agenda items for no more than six (6) minutes.
• A City Official may make a statement of specific factual information in response to an inquiry made by a member of the public, or a recitation of existing policy in response to an inquiry made by a member of the public.

VI. PUBLIC HEARING

OPENING OF PUBLIC HEARING

a) City Council will hold a public hearing to receive comments from the public to consider a recommendation from the Windcrest Planning and Zoning Commission regarding a request from Take 5 Oil Change to obtain a special use permit to allow an oil change facility at 5331 Walzem Rd., Windcrest, Texas - BCAD Property ID# 343993.

CLOSING OF PUBLIC HEARING

VII. FINANCIALS

a) Presentation, discussion, and acceptance of the unaudited monthly financial report for the month ending March 2025.

b) Presentation, discussion, and acceptance of the second quarter investment report for fiscal year 2024/2025. []

VIII. CONSENT AGENDA

a) City Council will review, discuss, and may act on a resolution approving the sale of Engine 187 Bravo by the Windcrest Fire Department. [Natalia Witmer, MFO/Interim City Manager]

b) City Council will review, discuss, and may act on a resolution dedicating vacant city-owned property located on the northwest corner of Crestway Drive and Jim Seal Drive, Windcrest, Bexar County, Texas, as parkland/recreation land. [Natalia Witmer, MFO/Interim City Manager]

IX. ORDINANCE

a) City Council will review, discuss, and may take action on an ordinance granting a special use permit for Take 5 Oil Change allowing an oil change facility at 5331 Walzem Rd., Windcrest, Texas - BCAD Property ID# 343993 **1st Reading** [Natalia Witmer, MFO/Interim City Manager]

b) City Council will review, discuss, and may act on an amendment to Chapter 12 of the City of Windcrest Code of Ordinances to amend section 12-21-Fire Marshal, by adding a designee. **1st Reading** [Natalia Witmer, MFO/Interim City Manager]

c) City Council will review, discuss, and may act on an ordinances amending Chapter 1 of the City of Windcrest Code of Ordinances by adopting section 1-12 regarding third party review fees. **1st Reading** [Natalia Witmer, Interim City Manager/MFO]

X. DISCUSSION AND ACTION

a) City Council will review, discuss, and may act on approving the transfer of certain numbers of acres of irrigation water to the Bexar County Water Control Improvement District #10 for the uses necessary for the city's retention ponds. [Natalia Witmer, MFO/Interim City Manager]

b) City Council will review, discuss and may act on the realignment of the vehicle storage and Public Work Maintenance yard property. [Natalia Witmer, Interim City Manager/MFO]

c) City Council will review, discuss and may act on establishing a standing Request for Proposal/Qualification Scoring and Evaluation Committee. [Natalia Witmer, MFO/Interim City Manager]

d) City Council will review, discuss, and may act on an Ordinance amending Section 20-2 of the Windcrest Code of Ordinances. [Natalia Witmer, MFO/Interim City Manager]

e) City Council will review, discuss, and may act on a Request for Qualifications for a Compliance Audit. [Adam Astleford, Council Member Place 5]

f) City Council will review, discuss, and may take action on scoring and selecting a firm for executive search services for the City Manager position. [Adam Astleford, Council Member Place 5]

XI. EXECUTIVE SESSION

The Windcrest City Council of the City of Windcrest reserves the right to adjourn into executive session at any time during course of the meeting to discuss any matter listed below:

a) Pursuant to Govt. Code § 551.071 (consultation with attorney) deliberation regarding existing litigation *Cause No.2025-CI-02429 In the District Court of Bexar County, Texas 57th District Jimmie Cole vs. City of Windcrest and City of Windcrest.* []

XII. CITY MANAGER'S REPORT

Any oral report provided by the city manager will be informational only and not for council action. The city manager may provide updates on community and upcoming city events, the status of the operation of individual departments, any unusual activity from any specific department which has occurred since the posting of the agenda, or to provide potential topics of discussion which may appear on a future agenda.

XIII. General Announcements & Future Agenda Items Requested

Per Ordinance No. 618, repealing Ordinance No. 593; Section 9: Every agenda shall include an item entry granting a member the opportunity to propose an item for consideration of future agendas for Regular or Special Meetings. Any member may request the inclusion of such items at any meeting.

XIV. Adjournment

Decorum Required: Any disruptive behavior, including shouting or derogatory statements or comments may be ruled out of order by the Presiding Officer. Continuation of this type of behavior could result in a request by the Presiding Officer that the individual leave the meeting, and if refused, an order of removal.

Action by Council Authorized: The City Council may vote and/or act upon any item within this Agenda. The Council reserves the right to retire into executive session concerning any of the items listed on this Agenda, pursuant to and in accordance with Texas Government Code § 551.072 (Deliberations about Real Property); § 551.073 (Deliberations about Gifts & Donations); § 551.076 (Deliberations about Security Devices); §551.087 (Economic Development); §551.074 (Personnel Matters) and, § 551.071to seek the advice of its attorney about pending or contemplated litigation, settlement offer or on a matter in which the duty of the attorney to the governmental body under the Texas Disciplinary Rules of Professional Conduct of the State Bar of Texas conflict with the Open Meetings Act and may invoke this right where the City Attorney, the Mayor or a majority of the Governing Body deems an executive session is necessary to allow privileged consultation between the City Attorney and the governing body, if considered necessary and legally justified under the Open Meetings Act. The attorney may appear in person or appear in executive session by conference call in accordance with applicable state law.

Executive Sessions Approved by City Attorney: This agenda has been reviewed and approved by the City's legal counsel and the presence of any subject in any Executive Session portion of the agenda constitutes a written interpretation of Texas Government Code Chapter 551 by legal counsel for the body and constitutes an opinion by the attorney that the items discussed therein may be legally discussed in the closed portion of the meeting considering available opinions of a court of record and opinions of the Texas Attorney General known to the attorney. This provision has been added to this agenda with the intent to meet all elements necessary to satisfy Texas Government Code Chapter 551.144(c) and the meeting is conducted by all participants in reliance on this opinion.

Attendance by Other Elected or Appointed Officials: It is anticipated that members of other city boards, commissions and committees may attend the meeting in numbers that may constitute a quorum of such other city boards, commissions and committees, so that notice is hereby given that the meeting is also a meeting of the other city boards, commissions and committees whose members are in attendance. The members of the other city boards, commissions and committees may participate in discussions which occur at the meeting, but no action will be taken by the other boards, commissions, and committees whose members are in attendance.

I, the undersigned authority, do hereby certify that the above Notice of Meeting of the City Council of the City of Windcrest is a true and correct copy of said Notice and was posted on the bulletin board at City Hall of said City in a convenient place to the public and said Notice was posted more than seventy-two (72) hours prior to the meeting on April 21, 2025.

BY:

Rachel C. Dominguez, TRMC
City Secretary

Windcrest Fire Department

Monthly Report for April 21, 2025

Summary Calls 2025

	JAN	FEB	MAR	APR	MAY	JUN	JUL	AUG	SEP	OCT	NOV	DEC	Total
Fire	82	70	86										238
EMS	121	113	119										353

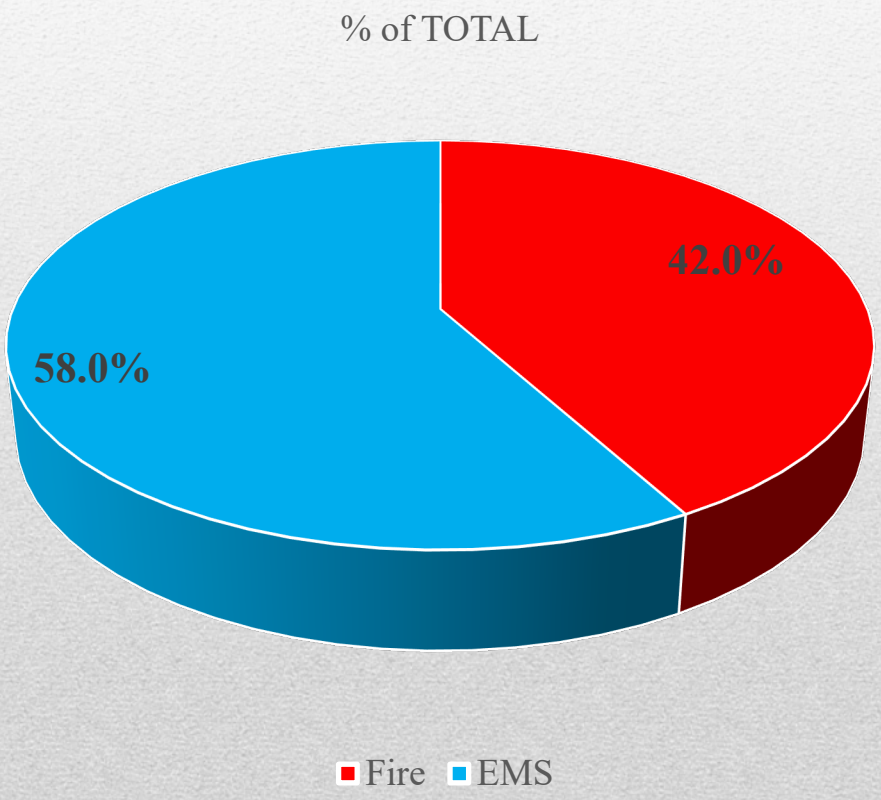

Historic Total Monthly Call Volume

	Jan	Feb	Mar	Apr	May	June	July	Aug	Sep	Oct	Nov	Dec	Total
2020	94	95	103	101	80	106	107	113	84	104	75	91	1153
2021	98	144	101	95	95	110	92	127	123	84	94	135	1298
2022	130	136	126	131	130	110	142	120	102	139	137	140	1543
2023	158	134	154	142	201	172	164	155	158	130	110	103	1781
2024	139	148	123	163	155	150	167	208	192	222	179	214	2060
2025	203	183	205										591

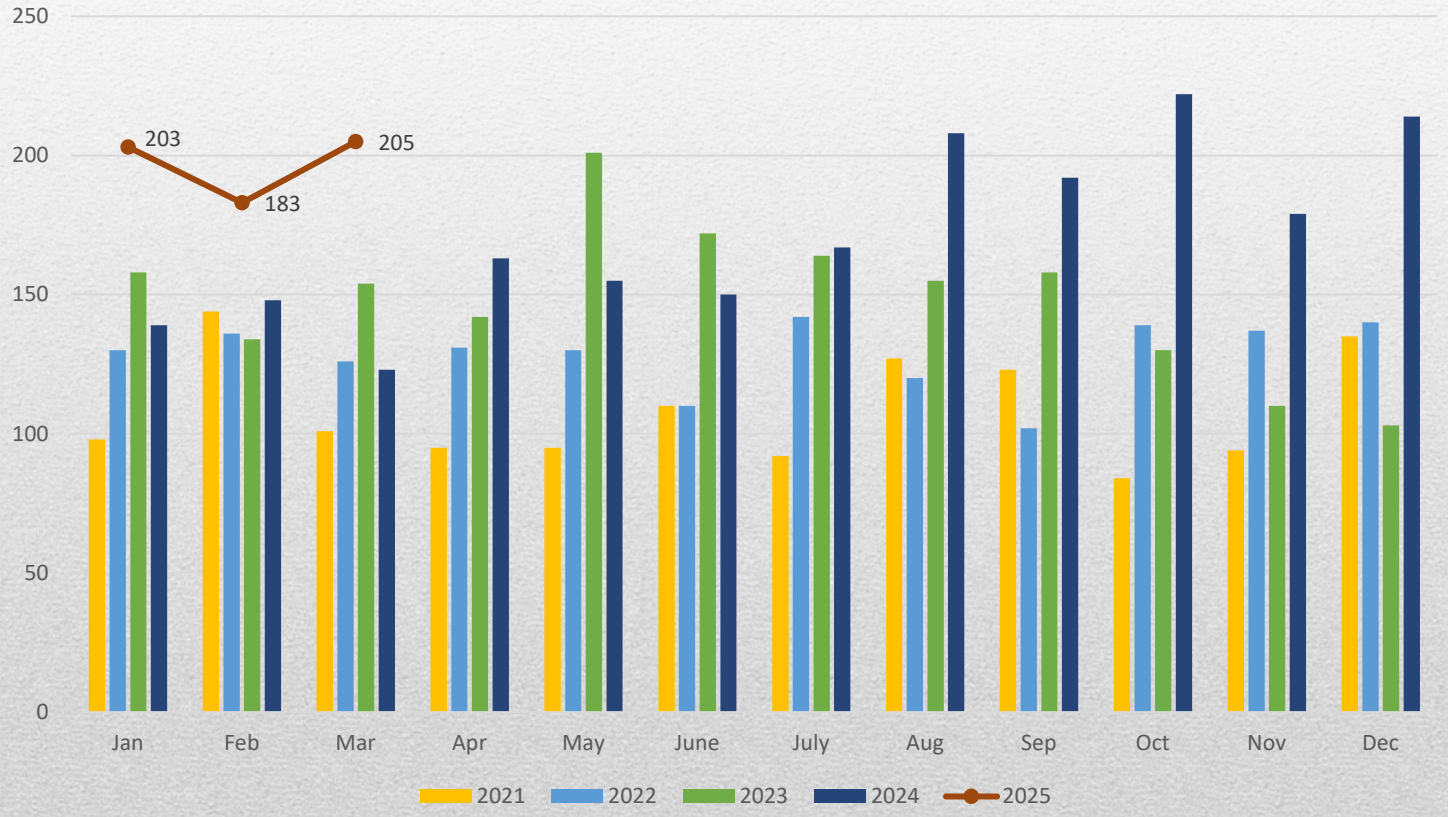

Percentage of Calls by District

Responses by District													
	Jan	Feb	Mar	Apr	May	June	July	Aug	Sep	Oct	Nov	Dec	Total
Residential	59	55	43										157
Business N Walzem	36	36	78										150
Business S Walzem	24	35	16										75
County- ESD 10	73	49	57										179
County- ESD 11	1	0	0										1
County- Bexar Bulverde	3	4	3										10
Converse	7	4	8										19

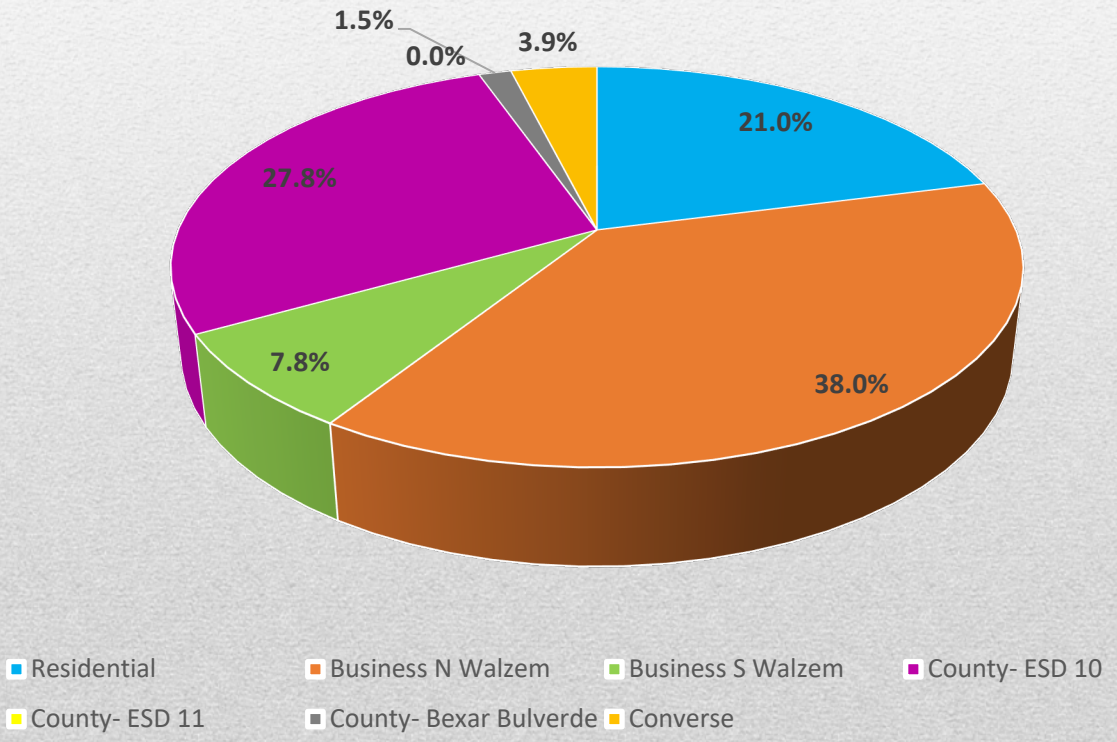

Automatic Aid/ Mutual Aid Received

Automatic/ Mutual Aid Received													
	Jan	Feb	Mar	Apr	May	June	July	Aug	Sep	Oct	Nov	Dec	Total
County- ESD 10	3	5	5										13
County- ESD 11	3	4	4										11
County- Bexar Bulverde	3	4	4										11
Converse	3	4	4										11
Fort Sam	3	4	4										11

- Automatic aid is when other departments are dispatched at the same time Windcrest is dispatched for fire response.
- Converse EMS had been utilized when Allegiance EMS and Acadian EMS are unavailable.

Automatic Vehicle Locator (AVL) Response

AVL Response													
	Jan	Feb	Mar	Apr	May	June	July	Aug	Sep	Oct	Nov	Dec	Total
County- ESD 10	59	40	45										144
County- ESD 11	0	0	0										0
County- ESD 11	1	0	0										1

- July 22, 2024, Windcrest joined ESD 10 and 12 with utilizing Automatic Vehicle Locator (AVL) responses for medical calls
  - Sends closest First Responder to call
  - We are in a trial phase and have meetings with the other Bexar County Fire Departments
  - ESD 11 and Bexar Bulverde (ESD 3) started using AVL

Automatic Vehicle Locator (AVL) Received

	Jan	Feb	Mar	Apr	May	June	July	Aug	Sep	Oct	Nov	Dec	Total
County- ESD 10	7	5	8										20
County- ESD 11	3	0	1										4

- Number of AVL calls that Windcrest received assistance
  - Windcrest FD on another call and a second or third call came in at the same time
  - Windcrest continues to be notified of the calls, but instead of Windcrest units on the first call having to ask for assistance, the system utilized by Fire Dispatch sees that Windcrest unit is unavailable and will automatically dispatch the next closest unit.

Fire Inspector/ Investigator

Fire Inspections 2025													
	January	February	March	April	May	June	July	August	September	October	November	December	Total
Fire Inspections	20	25	39										84
Re-Inspections	2	2	7										11
Fire Code Consult	22	25	22										69
System Test-Insp.	1	2	0										3
Fire Code Complaints	18	21	18										57
Food Truck Inspections	0	0	0										0
Plan Reviews	3	1	1										5
Fire Final / C of O Insp.	1	0	0										1
Home Inspections	1	1	1										3
Fire Investigations	2	1	2										5
Fire Code Compliance	21	23	20										464
Fire Pre-Plans	20	25	39										84
Code Violations	53	72	87										212
Total	164	198	236	0	0	0	0	0	0	0	0	0	598

Fire Inspector/ Investigator

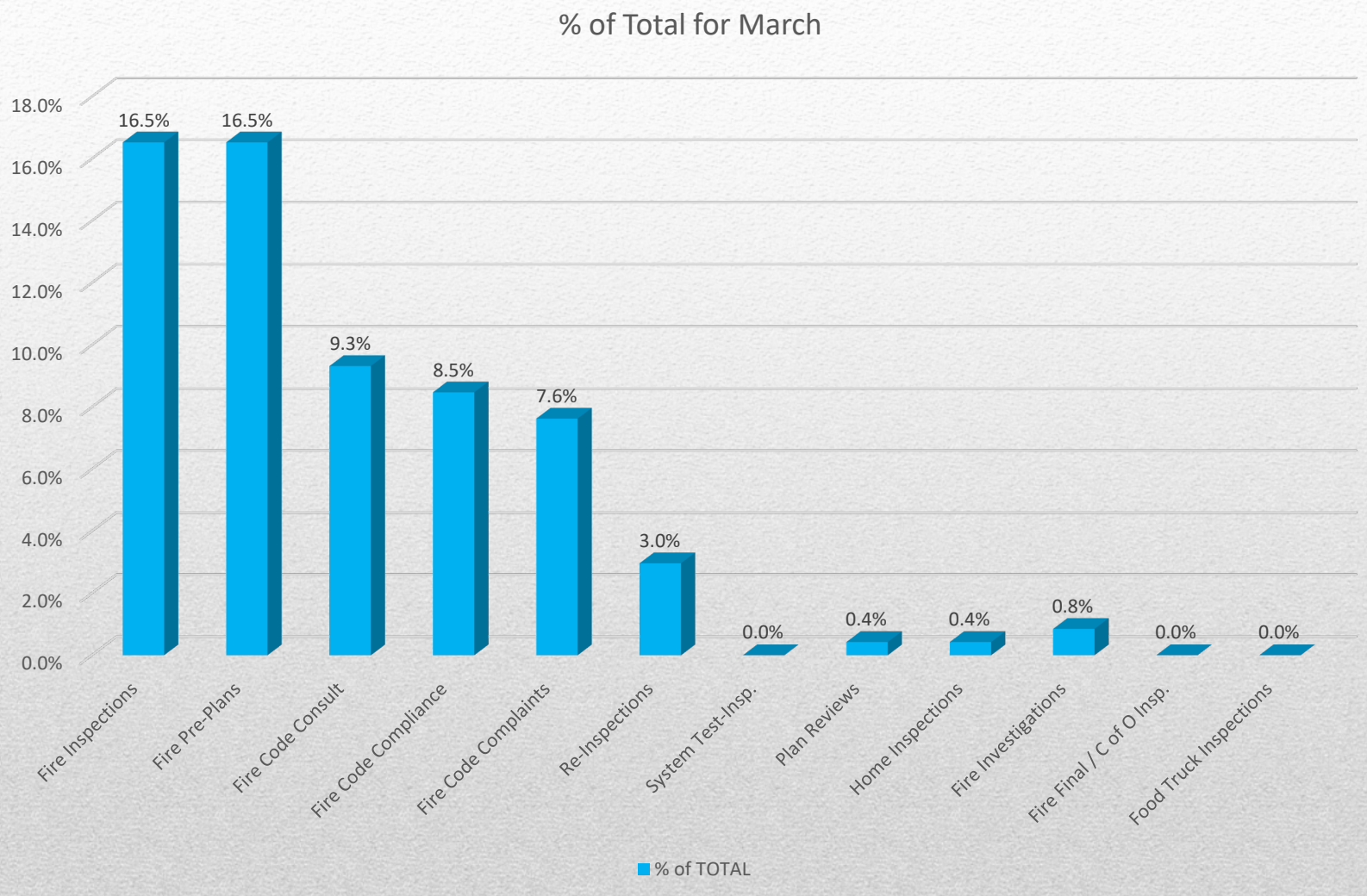

Volunteer Hours

Volunteer Hours FY 24/25							
Name	Oct. 2024	Nov. 2024	Dec. 2024	Jan. 2025	Feb. 2025	Mar. 2025	Total
FF R. Acosta	142.47	29.09	103.49	3.95 *	17.06	20.01	312.12
FF L. Ayala	22.96	17.06	20.3	21.63	0	22.45	104.4
FF A. Basen	33.06	39.88	4.75	33.27	26.92	13 *	137.88
FF J. Basen	4.35	24.27	0	25.23	23.15	0 *	77
FF W. Baumann	16.33	21.01	31.85	20.06	25.95	22.2	137.4
Dorm FF. A. Benavidez			126.68	135.65	156.94	193.29	612.56
FF Benson	66.35	1.67	94.65	41	0 *	31.6	235.27
FF Budzinski	51.37	88.45	118.63	65.06	70.4	56.2	450.11
Medic J. Gonzales	21.6	23.88	37.62	21.78	20.67	25.62	151.17
FF. J. Hernandez					99.33	72.08	171.41
Dorm FF Martinez	113.91	141.12	114.41	160.45	153.68	126.16	809.73
FF Vehle	7.42	21.42	22.43	6.4 *	24.23	10.47	85.97
Dorm FF D. Villanueva	102.82	127.27	166.26	150.01	149.59	163.64	859.59
FF T. Woodley					27.29	0	27.29
Total	602.89	535.12	841.07	674.14	795.21	743.72	4192.15

- 20 Hours a month and 2 out of the 6 trainings a month
- Dorm Members= 106 hours a month
- * Joined in the middle of the month or special arrangement with Office of the Chief

Volunteers on calls

Volunteers	# of Calls attended	Percentage of Calls
D. Villanueva	17	8.29%
J. Budzinski	7	3.41%
J. Hernandez	3	1.46%
P. Martinez	0	0.00%
T. Woodley	0	0.00%
B. Vehle	1	0.49%
R. Acosta	1	0.49%
W. Baumann	6	2.93%
A. Basen	0	0.00%
A. Benavidez	5	2.44%
J. Basen	0	0.00%
J. Benson	5	2.44%
J Gonzales	0	0.00%
L. Ayala	0	0.00%
March 2025 total calls	205	

Volunteers Percentage of calls attended

Volunteers	% of calls attended Jan. 2025	% of calls attended Feb. 2025	% of calls attended March 2025
J. Budzinski	8.90%	4.92%	3.41%
D. Villanueva	7.90%	9.29%	8.29%
W. Baumann	3.40%	1.09%	2.93%
A. Basen	2.50%	0.55%	0.00%
J. Benson	2.50%	0.00%	2.44%
J. Basen	2.00%	0.55%	0.00%
J. Hernandez	1.50%	4.37%	1.46%
J Gonzales	0.50%	0.00%	0.00%
L. Ayala	0.50%	0.00%	0.00%
P. Martinez	0.50%	3.28%	0.00%
T. Woodley	0.00%	3.28%	0.00%
A. Benavidez	0.00%	0.55%	2.44%
B. Vehle	0.00%	2.37%	0.49%
R. Acosta	0.00%	1.09%	4.90%

Current Projects

- Fire Department Budget FY 25/26
  - Presented to Finance Director
- Reviewing Policies and updating
  - Continuing to update
- Reviewing Fire Codes
  - Ordinances passed
    - Working with Court Clerk to enter into system

Events

- Attended the following
  - ICP meetings
  - CESO Meeting
  - First Responder Meeting
  - Medical Training
  - Install Smoke Detectors
  - Install Knox Box

Apparatus Status

- Engine 187 is in Service
- Engine 187B is in Reserve
- Platform 187 is in Service
- Brush 187 is in Service
- Squad 187 is in Service
- Chief 187 is in Service
- AC 187 is in Service
- FM 187 is in Service

Ivan Hernandez
Fire Chief/Emergency Management Coordinator
Windcrest Fire Department
firechief@windcrest-tx.gov
210-655-0022 ext. 2180

Windcrest Police Department Monthly - March 2025

PATROL OPERATIONS SECTION

	JAN '25	FEB '25	MAR '25	APR '24	MAY '24	JUN '24	JUL '24	AUG '24	SEP '24	OCT '24	NOV '24	DEC '24	TOTAL
PROACTIVE POLICE ACTIVITIES	3415	2751	2364	2568	2485	3294	2130	3273	3306	3270	3718	3904	36478
TOTAL CALLS FOR SERVICE	3570	3492	4013	3528	3677	4179	3899	4015	3760	3654	3222	3070	44079
COVER CALLS (2 PLUS OFFICERS)	792	519	508	360	330	308	316	395	841	529	763	662	6323
FELONY CHARGES	15	18	10	64	30	39	31	22	15	10	17	43	314
MISDEMEANOR CHARGES	46	41	43	124	78	78	73	67	46	39	56	10	701
D.W.I. ARREST	1	1	2	1	1	1	0	0	1	0	3	2	13
CITY ORDINANCE ENFORCEMENT	42	29	15	23	10	16	30	41	69	23	25	17	340
ARREST ON-CALL	25	23	21	25	17	22	40	29	19	27	24	22	294
ARREST ON-SIGHT	24	17	29	23	26	29	26	24	21	9	25	17	270
WARRANTS CLEARED	9	7	14	18	7	12	10	12	3	4	8	3	107
MUNICIPAL COURT CITATIONS	1001	851	663	735	668	1041	1043	1232	924	1006	1107	983	11254
WARNING CITATIONS	126	104	86	86	106	96	134	130	215	130	161	188	1562
PARKING VIOLATION NOTICES	18	10	10	14	9	20	4	11	0	13	22	14	145
CRIME PREVENTION NOTICES	1193	889	832	850	854	1033	986	973	879	1067	1168	1230	11954
BUSINESS / RESIDENTIAL CHECKS	1142	953	825	923	925	1155	1041	992	982	1134	1356	1447	12875
IMPOUNDED VEHICLES	17	14	16	24	13	30	22	29	23	23	26	22	259
MENTAL HEALTH	8	6	7	5	3	1	2	6	4	5	5	5	57

SCHOOL RESOURCE OFFICER

SCHOOL SAFETY PATROL HOURS	20	25	15	21	22	0	0	30	21	20	22	14	210
ORGANIZATION AND PREP HOURS	0	0	0	0	0	0	3	0	3	5	2	4	17
TOTAL EVENTS	0	0	0	0	3	0	2	2	2	3	2	2	16
TOTAL PRESENTATIONS	0	0	0	0	3	0	0	0	2	2	2	2	11

DISPATCHER ACTIVITY

OFFICER INITIATED CALLS	3078	3023	3525	2945	3126	3669	3359	3494	3239	3008	2676	2538	37680
TELEPHONE CALLS FOR SERVICE	369	345	376	373	358	362	356	343	355	464	415	381	4497
911 CALL FOR SERVICE	109	117	111	180	173	127	160	165	157	177	126	141	1743
WALK IN CALL FOR SERVICE	14	7	1	29	19	21	24	13	9	5	4	10	156

City Ordinance Enforcement New Data Report (Patrol Only)

ORDINANCE VIOLATIONS BY PATROL ONLY

* WARRANTS CLEARED = ALL WARRANTS TO INCLUDE WINDCREST WARRANTS (PATROL ARREST ONLY)

ONE ACTIVITY IN ONE CALL)

Windcrest Police Department Monthly - March 2025

CRIMINAL INVESTIGATIONS UNIT SUMMARY

SPECIAL OPS DIVISION	JAN '25	FEB '25	MAR '24	APR '24	MAY '24	JUN '24	JUL '24	AUG '24	SEP '24	OCT '24	NOV '24	DEC '24	TOTAL
FILED with DA	27	35	17	31	35	16	26	17	17	25	11	17	274
Closed, Pending Further Information	10	17	5	46	24	27	5	17	28	33	30	27	269
ACTIVE ARREST CASES PREPARING FOR THE DA	25	12	3	23	9	22	25	16	18	10	13	9	185
ACTIVE FUGITIVE	6	1	1	0	0	0	9	3	0	10	6	7	43
EXCEPTIONAL CLEARED	1	1	1	5	4	0	3	4	1	4	2	4	30
FILED w/ DA PENDING LABS	5	8	4	7	7	4	9	9	11	3	1	6	74
ACTIVE TOTAL	150	94	126	98	101	97	122	102	147	31	33	136	1237
UNFOUNDED	1	1	3	3	0	1	1	1	0	2	0	1	14
ASSIGNED	50	18	46	75	58	57	53	42	66	41	65	50	621
FELONY CASES ASSIGNED	14	27	19	31	22	30	22	19	24	22	27	21	278
MISDEMEANOR CASES ASSIGNED	14	47	27	37	35	23	28	23	34	17	38	29	352
EVIDENCE VIDEO FOR COURT	89	151	145	161	111	112	165	142	123	99	43	94	1435
EVIDENCE SUBMITTED TO CRIME LAB	8	6	17	28	29	125	15	10	8	14	18	7	285
BACKGROUND INVESTIGATIONS APPLICANTS	0	3	1	3	8	4	3	3	0	12	5		42

CITIZENS' PATROL SUMMARY													
PATROL HOURS	33	18	25	49	38	51	21	66	51	62	45	40	499
ORGANIZATION AND PREP	0	0	0	0	0	0	0	2	0	0	0	0	2
EVENTS	0	0	0	0	0	0	0	1	1	1	0	0	3
TRAINING AND MEETINGS HOURS	1	0	0	0	0	0	0	0	0	0	0	0	1
CITIZEN PATROL PARTICIPANTS	16	18	17	25	22	18	8	23	21	22	19	15	224

Windcrest Police Department Current Crime Map - March 2025

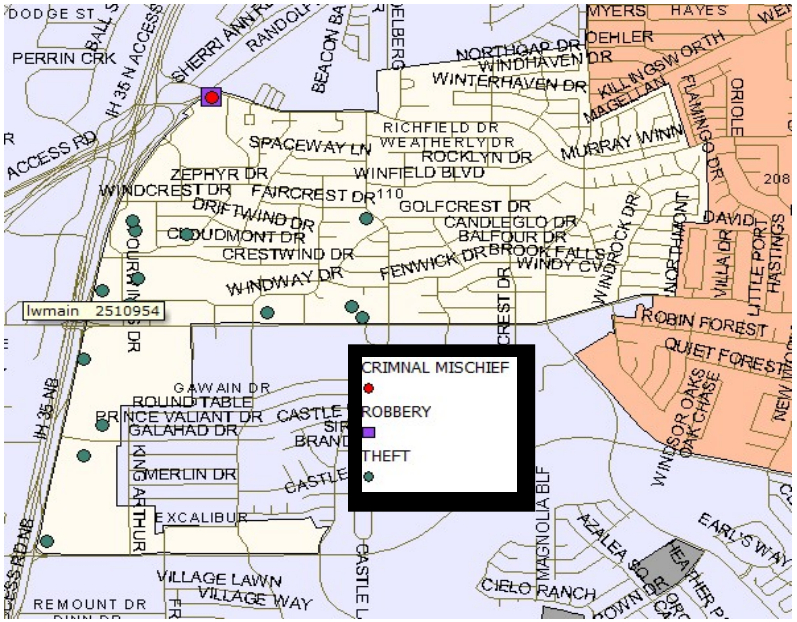

Case	Reported	Nature	Incident address
2510184	21:01:06 03/24/25	Crim Mischief <$100	5100 CRESTWAY RD CIRCLE K
2508094	18:48:22 03/08/25	Robbery	5100 CRESTWAY RD; CIRCLE K
2507755	11:49:14 03/06/25	Theft <$100	7280 IH 35 N; QUIK TRIP
2507528	16:05:16 03/04/25	Theft <$100	8640 FOURWINDS DR; CAVENDERS BOOT CITY
2507547	18:24:31 03/04/25	Theft Property $750-$2500	4909 WINDSOR HILL; HOME DEPOT
2507552	19:50:37 03/04/25	Theft Under $2500 Enhanced	7500 IH 35 N; TEXAS THRIFT STORE
2507607	09:07:12 03/05/25	Theft <$100	7280 IH 35 N; QUIK TRIP
2507788	23:10:53 03/06/25	Theft	4801 WALZEM RD; CIRCLE K
2507908	14:53:20 03/07/25	Theft	5100 CRESTWAY RD; CIRCLE K
2507922	17:00:12 03/07/25	Theft $750-$2500	4900 WINDSOR HILL; FROST BANK
2507957	20:40:01 03/07/25	Theft $100- $750	5465 WALZEM RD; WSS
2508060	12:39:51 03/08/25	Theft <$100	4909 WINDSOR HILL; HOME DEPOT
2508063	13:36:05 03/08/25	Theft $100- $750	7500 IH 35 N; TEXAS THRIFT STORE
2508225	15:42:14 03/09/25	Theft <$100	5100 CRESTWAY RD; CIRCLE K
2508375	20:36:53 03/10/25	Theft <$100	5239 WALZEM RD; SPINXPRESS
2508469	13:52:38 03/11/25	Theft <$100	5465 WALZEM RD; WSS
2508480	16:10:37 03/11/25	Theft <$100	8601 MIDCROWN DR
2508641	20:57:43 03/12/25	Theft <$100	4909 WINDSOR HILL; HOME DEPOT
2508706	11:14:15 03/13/25	Theft $100- $750	222 CLOUDMONT DR
2508725	13:28:00 03/13/25	Theft $100- $750	5465 WALZEM RD; WSS
2508849	11:45:23 03/14/25	Theft <$100	7280 IH 35 N; QUIK TRIP
2509025	20:14:51 03/15/25	Theft <$100	5405 WALZEM RD SUITE 3; DOLLAR TREE
2509186	02:09:32 03/17/25	Theft <$100	5100 CRESTWAY RD; CIRCLE K
2509195	04:28:54 03/17/25	Theft <$100	5100 CRESTWAY RD; CIRCLE K
2509344	08:06:31 03/18/25	Theft <$100 Enhanced	7280 IH 35 N; QUIK TRIP
2509417	19:45:11 03/18/25	Theft <$100	4801 WALZEM RD; CIRCLE K
2509486	09:36:05 03/19/25	Theft <$100	7280 IH 35 N; QUIK TRIP
2509517	18:50:17 03/19/25	Theft <$100	4801 WALZEM RD; CIRCLE K
2509547	01:34:40 03/20/25	Theft <$100	5100 CRESTWAY RD; CIRCLE K
2509548	01:34:53 03/20/25	Theft <$100	5100 CRESTWAY RD; CIRCLE K
2509605	12:27:56 03/20/25	Theft <$100	7280 IH 35 N; QUIK TRIP
2509651	22:48:17 03/20/25	Theft Property $100- $750	7920 IH 35 N; OLIVE GARDEN
2509743	12:02:03 03/21/25	Theft $750-$2500	7702 IH 35 N; GOODWILL
2509794	19:15:45 03/21/25	Theft <$100	7280 IH 35 N; QUIK TRIP
2510053	18:53:52 03/23/25	Theft <$100	5100 CRESTWAY RD; CIRCLE K
2510157	14:05:27 03/24/25	Theft <$100	5100 CRESTWAY RD; CIRCLE K
2510291	12:54:22 03/25/25	Theft <$100	7280 IH 35 N; QUIK TRIP
2510298	15:41:36 03/25/25	Theft $100 < $750	8640 FOURWINDS DR; CAVENDERS BOOT CITY
2510554	17:12:24 03/27/25	Theft $100 < $750	8540 FOURWINDS DR; ROSS DRESS FOR LESS
2510592	21:26:27 03/27/25	Theft <$100	8206 IH 35 N; CHIPOTLE
2510858	05:39:16 03/30/25	Theft <$100	4801 WALZEM RD; CIRCLE K
2510859	06:13:14 03/30/25	Theft <$100	4801 WALZEM RD; CIRCLE K
2510871	11:40:09 03/30/25	Theft <$2500 2/More Convictions	4909 WINDSOR HILL; HOME DEPOT
2510954	04:47:33 03/31/25	Theft <$100	4801 WALZEM RD; CIRCLE K

Windcrest Police Department Monthly - March 2025

WINDCREST POLICE DEPARTMENT CODE COMPLIANCE UNIT

SUPPORT SERVICES SECTION	JAN '25	FEB '25	MAR '25	APR '24	MAY '24	JUN '24	JUL '24	AUG '24	SEP '24	OCT '24	NOV '24	DEC '24	TOTAL
JUNK VEHICLE	3	10	2	0	0	1	0	0	0	2	2	2	22
STREET USED FOR STORAGE (VEHICLE)	0	1	4	0	0	0	0	0	0	0	0	0	5
RV-BOAT-TRAILER ON DRIVEWAY/STREET	10	14	10	5	3	1	3	6	6	4	3	3	68
VEHICLES ON GRASS	1	0	0	2	0	0	2	0	0	4	0	0	9
OVERGROWN VEGETATION (FRONT)	7	3	8	44	21	12	2	17	19	33	10	12	188
OVERGROWN VEGETATION (ALLEY)	1	0	0	1	118	117	75	3	4	3	3	3	328
VACATED PROPERTY	0	0	0	0	0	0	0	0	0	0	0	0	0
OVERHANGING TREE LIMBS (STREET-ALLEY)	0	0	0	1	0	1	2	5	4	8	0	0	21
NO ALARM PERMIT (RESIDENTIAL)	0	0	1	0	0	1	0	0	0	0	0	0	2
NO ALARM PERMIT (COMMERCIAL)	0	0	0	0	0	0	0	0	0	0	0	0	0
NO BUILDING PERMIT (RESIDENTIAL)	0	1	3	3	2	4	4	1	2	1	2	3	26
NO BUILDING PERMIT (COMMERCIAL)	1	0	1	0	1	0	1	3	1	0	1	1	10
LICENSES AND PERMITS	0	0	1	0	0	0	0	0	0	0	0	0	1
ZONING	0	0	1	0	0	0	0	0	0	0	0	0	1
NON-REPUBLIC DUMPSTER	0	0	2	0	0	0	0	0	0	3	0	0	5
SWIMMING POOLS (STAGNANT)	0	0	0	1	0	0	1	0	0	0	0	0	2
SWIMMING POOLS (UNSECURED)	0	0	1	0	0	2	0	0	1	0	0	0	4
SOLID WASTE-REFUSE COLLECT (NON-PAY)	0	0	0	3	0	0	0	0	0	0	0	0	3
UNSIGHTLY-UNSANITARY CONDITION	4	0	11	5	5	7	10	6	19	7	5	5	84
CAMPING	1	0	0										1
GRAFFITI AND TOOLS	0	0	0	0	0	0	0	0	1	0	0	0	1
NOISE NUISANCE	0	0	0	0	0	0	1	0	0	0	0	0	1
SIGN ORDINANCE (VIOLATION)	0	0	0	0	0	0	0	0	0	0	0	0	0
EXTERIOR LIGHTING	0	0	0							1	5	4	10
BUSINESS/RESIDENTIAL FOLLOW UP	139	126	185	150	97	26	65	103	96	179	105	136	1407
SOLICITORS (VIOLATIONS)	22	1	0	0	0	0	0	0	0	0	1	0	24
SIGNS (BANDIT)	14	7	20	14	7	8	34	5	1	14	18	18	160
TOTAL ISSUES ADDRESSED	203	163	250	229	254	180	200	149	154	259	155	187	2383
CITATIONS ISSUED (CODE)	1	5	4	5	4	2	1	0	6	2	15	15	60
WRITTEN NOTICES ISSUED (CODE)	27	24	35	65	145	141	84	34	50	56	19	23	703
TOTAL ENFORCED	28	29	39	70	149	143	85	34	56	58	34	38	763

Windcrest Police Department Monthly - March 2025

WINDCREST POLICE DEPARTMENT ANIMAL CARE AND CONTROL UNIT

SUPPORT SERVICES SECTION	JAN '25	FEB '25	MAR '25	APR '24	MAY '24	JUN '24	JUL '24	AUG '24	SEP '24	OCT '24	NOV '24	DEC '24	TOTAL
CALLS FOR SERVICE (DISPATCHED)	40	19	22	36	47	41	52	21	51	64	43	27	463
CALLS FOR SERVICE (DIRECT)	2	0	5	0	0	0	0	4	0	4	0	3	18
TOTAL CALLS	42	19	36	36	47	41	52	25	51	68	43	30	490
DOGS RECOVERED	15	9	10	12	10	16	14	7	15	6	10	13	137
DOGS REGISTERED	13	5	2	5	3	5	5	2	4	10	11	2	67
DOGS QUARINTINED	1	0	1	0	0	1	0	0	0	0	0	1	4
DOGS IMPOUNDED	8	6	9	5	8	5	4	3	10	3	4	4	69
DOGS ADOPTED	1	1	1	3	2	2	0	7	0	0	1	0	18
DOGS FOSTERED	0	0	4	1	1	4	0	0	0	0	1	0	11
DOGS TRANSFERRED TO RESCUE	0	0	4	0	0	0	0	7	0	0	0	1	12
DOGS EUTHANIZED	8	5	1	0	0	1	0	0	0	0	0	0	15
DOGS RETURNED TO OWNER (DIRECT)	6	3	1	9	2	3	8	4	8	2	5	8	59
DOGS RETURNED TO OWNER (IMPOUND FACILITY)	1	0	0	1	1	2	1	0	2	1	0	1	10
DOMESTIC CATS REGISTERED	1	0	0	0	0	0	0	0	0	0	2	0	3
TNR	1	0	0	5	1	0	0	0	0	1	2	0	10
DECEASED DOMESTIC ANIMAL	5	1	0	0	0	3	3	1	0	1	2	4	20
DECEASED WILDLIFE	4	1	3	4	7	4	2	1	5	9	3	2	45
CITATIONS - NO LEASH	1	0	0	0	0	0	0	0	0	0	0	0	1
CITATIONS - ANIM AT LARGE	1	0	4	2	2	2	4	0	3	2	4	0	24
CITATIONS - ANIM VAC	1	0	0	2	2	2	0	1	1	1	2	0	12
CITATIONS - ANIM REG	1	0	2	2	2	2	4	0	0	1	0	0	14
WARNING - ANIM AT LARGE	1	2	1	3	0	1	1	2	1	2	2	4	20
WARNING - ANIMAL VAC	0	0	0	0	0	1	1	0	0	0	0	0	2
WARNING - ANIMAL REG	0	0	0	0	0	1	1	0	0	0	1	2	5
COST - IMPOUND/SHELTER	$50,170.00	$32,125.00	***	$14,112.21	$19,293.58	$23,034.11	$53,656.86	$47,082.82	$38,355.00	$43,665.00	$42,910.00	$44,510.00	$408,914.58
COST - VETERINARY/CARE	$3,889.61	$13,895.07	$6,026.15	$5,180.05	$2,684.87	$3,223.44	$4,954.45	$8,179.02	$2,271.24	$6,238.09	$2,982.95	$15,571.60	$75,096.54
TOTAL COST	$54,059.61	$46,020.07	$6,026.15	$19,292.26	$21,978.45	$26,257.55	$58,611.31	$55,261.84	$40,626.24	$49,903.09	$45,892.95	$60,081.60	$484,011.12

No invoice received yet

April 11, 2025

David Ellis
Interim Chief of Police

Please contact me with any questions concerning this report.
This reporting is required by the City of Windcrest Charter δ 5.02.3(h).

CITY OF WINDCREST MUNICIPAL COURT - OFFICIAL MONTHLY ACTIVITY REPORT FY 2024-2025

	Oct. 2024	Nov. 2024	Dec. 2024	Jan. 2025	Feb. 2025	Mar. 2025	Apr. 2025	May. 2025	Jun. 2025	Jul. 2025	Aug. 2025	Sept. 2025	TOTAL	Medium Average
Cases Filed	1101	743	793	991	878	1120							5626	938
Fines Paid	38	29	31	52	49	53							252	42
Bond Forfeiture	0	0	0	0	0	0							0	0
Not Guilty	0	0	0	0	0	2							2	0
Guilty	418	371	291	513	427	538							2558	426
Dismissed	143	216	172	235	179	208							1153	192
Compliance Dismissals	18	36	32	56	31	55							228	38
Defensive Driving	18	22	12	30	11	18							111	19
Deferred Disposition	55	30	87	81	65	55							373	62
Insurance	4	4	6	8	4	7							33	6
Online Payments	475	386	457	343	323	413							2397	263.00
Orders for Community Svc.	11	0	1	5	0	1							18	3
Appeals	0	0	0	0	0	0							0	0
TOTAL CASES HEARD	705	688	630	984	766	937							4710	785
Failure to Appear/Warrants	841	232	566	524	219	775							3157	526
Warrant Officer Fine/Fee Addressed	$31,892.91	$30,986.60	$ 21,624.67	$42,099.00	$52,962.21	$45,908.75							$225,474.14	37,579
Warrant Officer Activity	194	197	138	239	281	251							1300	217
Court Fines	$82,313.69	$ 63,563.13	$ 55,363.04	$102,142.56	$ 83,629.11	$ 93,893.48							$480,905.01	$80,150.84
State Fees	$43,130.28	$ 39,042.30	$ 31,168.68	$66,187.46	$ 40,849.97	$ 49,510.60							$269,889.29	$44,981.55
City Share of State Fees (10%)	$4,313.03	$ 3,904.23	$ 3,116.87	$ 6,618.75	$ 4,084.99	$ 4,951.06							$26,988.93	$4,498.16
Court Technology Fund	$2,111.78	$ 1,929.60	$ 1,546.16	$ 2,434.26	$ 2,101.80	$ 2,499.59							$12,623.19	$2,103.87
Court Building Security Fund	$2,511.84	$ 2,329.59	$ 1,868.45	$ 2,942.33	$ 2,523.94	$ 3,055.83							$15,231.98	$2,538.66
Fee to Omni/State	$1,692.35	$ 1,316.02	$ 898.12	$ 2,227.42	$ 1,316.02	$ 1,995.09							$9,445.02	$1,574.17
Collection Agency Fees	$3,561.24	$ 2,676.11	$ 2,409.89	$ 4,667.80	$ 6,522.93	$ 10,132.63							$29,970.60	$4,995.10
TOTAL CITY REVENUE	**$86,626.72**	**$67,467.36**	**$58,479.91**	**$108,761.31**	**$87,714.10**	**$98,844.54**							**$507,893.94**	$84,648.99
PRIOR Year Total Revenue	**$88,354.15**	**$ 65,307.25**	**$ 53,460.98**	**$ 95,053.96**	**$ 84,798.43**	**$ 89,869.10**	**$ 91,580.68**	**$ 82,734.26**	**$ 65,593.35**	**$ 84,648.80**	**$ 66,300.04**	**$ 80,806.04**	**$948,507.04**	$ 79,042.25
												Percentage of Revenue Reached from Prior Year	**54%**	

Persons Arrested (Held in WCPD)	0	0	0	0	0	0	0	0	0	0	0	0	$ -
Persons Incarcerated (HELD IN GC)	0	0	0	0	0	0	0	0	0	0	0	0	$ -
Cost of Incarceration	$ -	$ -	$ -	$ -	$ -	$ -	$ -	$ -	$ -	$ -	$ -	$ -	$ -

2023/2024 Court Activity

Cases Filed	1005	1188	967	1184	931	768	828	732	1020	1183	1255	1143	12204	
Court Fines	$ 83,510.21	$ 61,560.44	$ 50,348.38	$ 89,581.73	$ 80,356.86	$ 85,127.00	$ 87,643.00	$ 78,770.35	$ 61,965.25	$ 79,929.09	$ 62,482.23	$ 76,528.73	$ 897,803.27	
TOTAL CASES HEARD	784	676	582	878	784	753	710	730	689	634	764	802	8786	
Persons Arrested	0	0	0	0	0	0	0	0	0	0	0	0	$ -	
Persons Incarcerated	0	0	0	0	0	0	0	0	0	0	0	0	$ -	
Cost of Incarceration	$0	$ -	$ -	$ -	$ -	$ -	$ -	$ -	$ -	$ -	$ -	0	$ -	
Warrant Officer Fine/Fee Addressed	$33,727.00	$34,045.80	$ 21,865.90	$41,114.74	$48,384.62	$ 52,087.42	$35,462.60	$35,170.47	$38,508.60	$34,428.82	$ 28,452.82	$ 37,758.74	$ 441,007.53	$36,750.63
Warrant Officer Activity	252	300	184	273	277	345	198	180	182	188	209	237	2825	235

CASES FILED

FY 2022/2023 vs. FY 2023/2024

(Citations from Police Department, Code Enforcement, Animal Control)

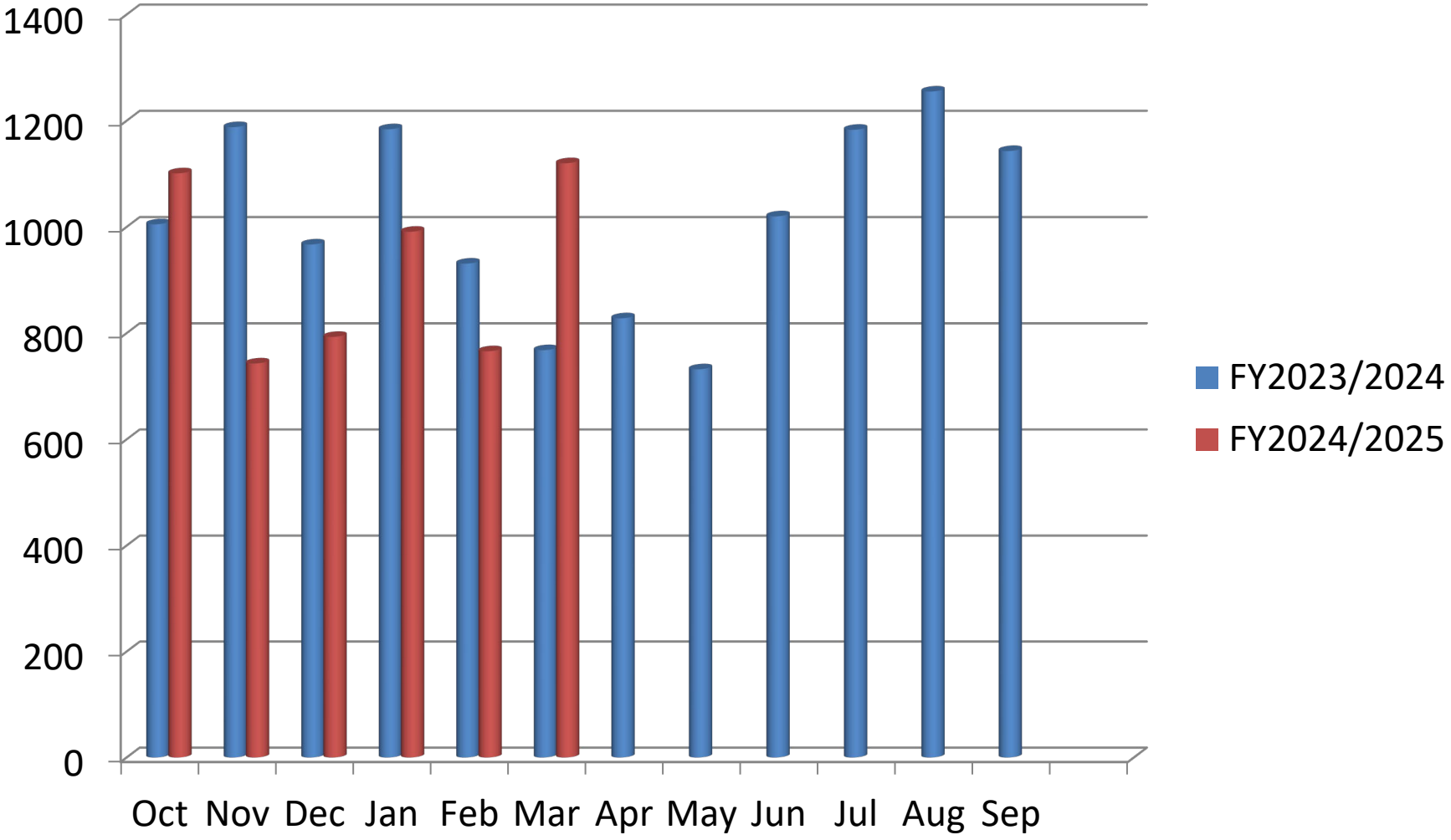

FINES PAID

FY 2021/2022 vs. FY 2022/2023

(Number of cases in which defendants came in and paid in full and case was closed. Does not include defendants who were granted Deferred Disposition or Defensive Driving)

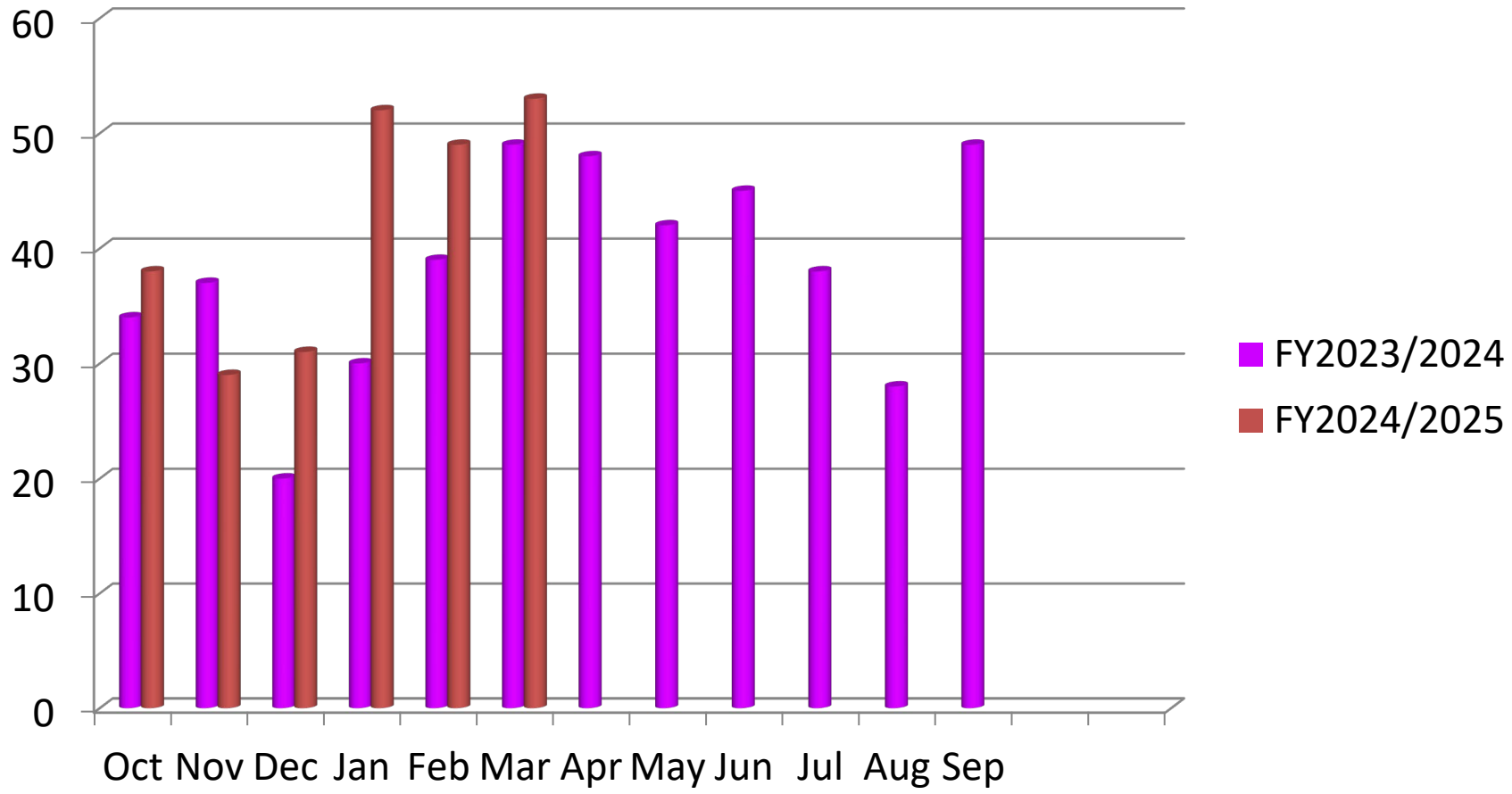

NOT GUILTY / GUILTY

(Numbers only, not $ amounts. Guilty column correlates with defendants who paid fines in FY 2024/2025 from above slide)

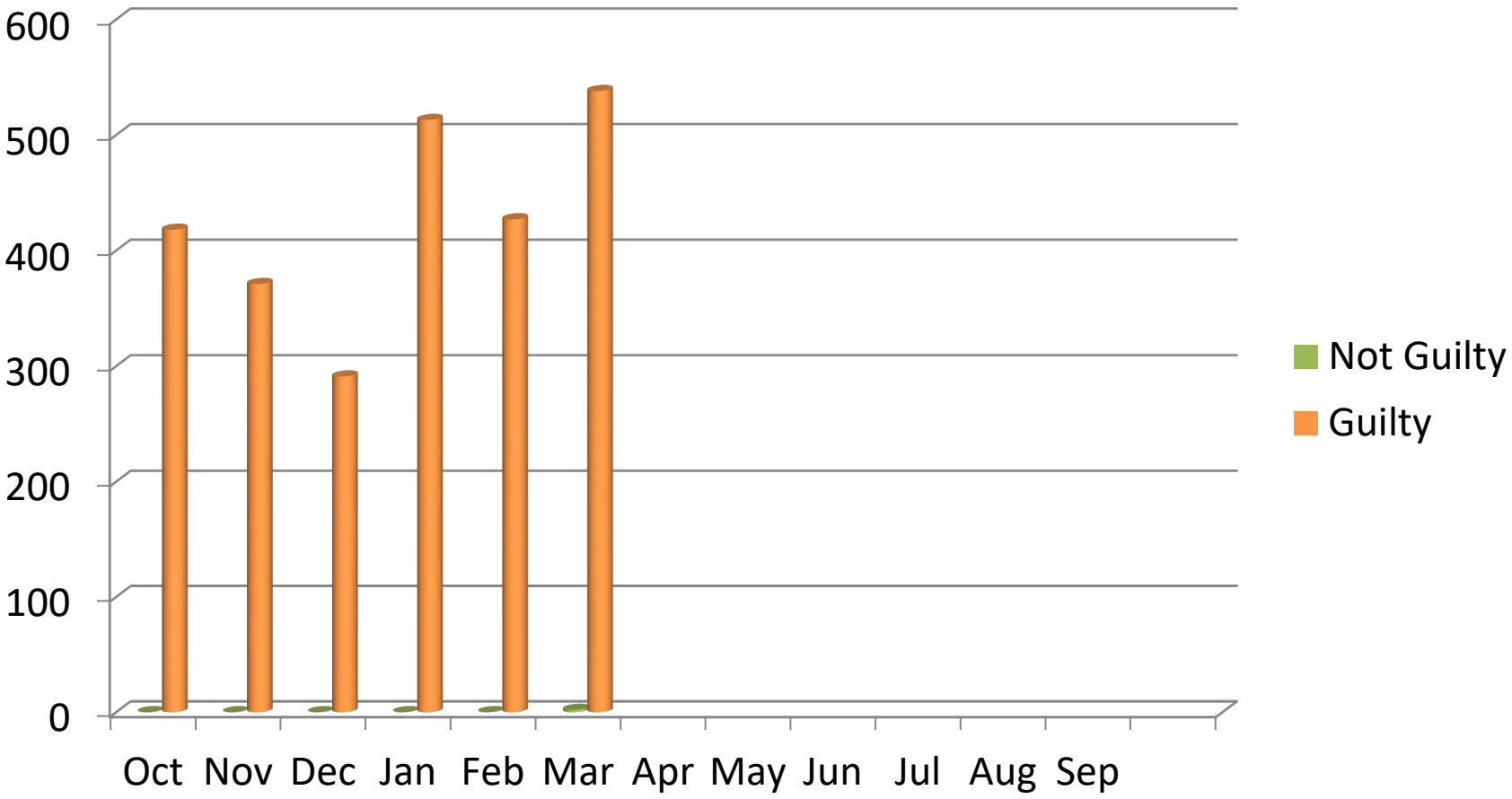

DISMISSALS

(Numbers only, not $ amounts)

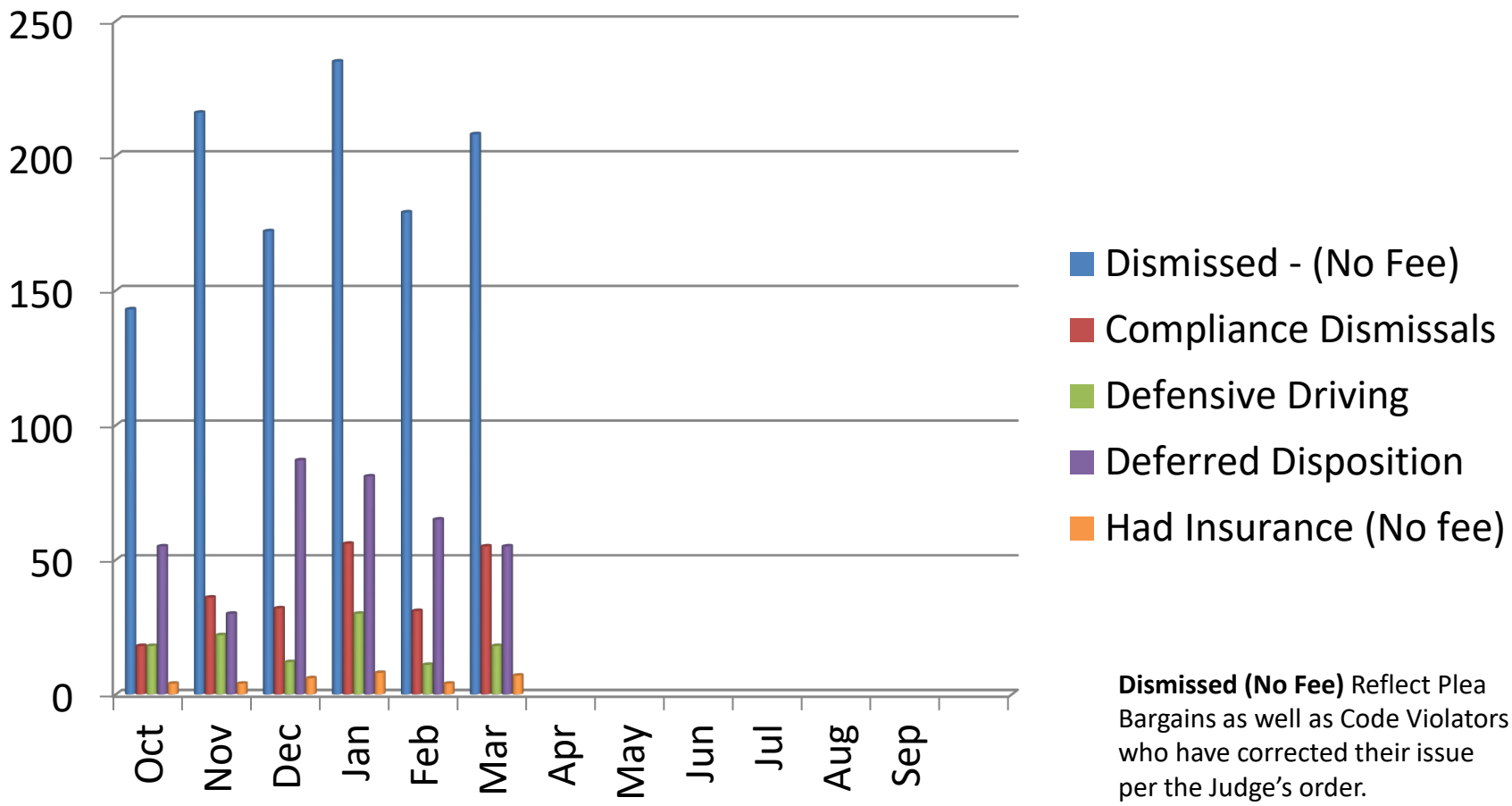

Dismissed (No Fee) Reflect Plea Bargains as well as Code Violators who have corrected their issue per the Judge's order.

DISTRIBUTION OF TOTAL COURT COLLECTIONS

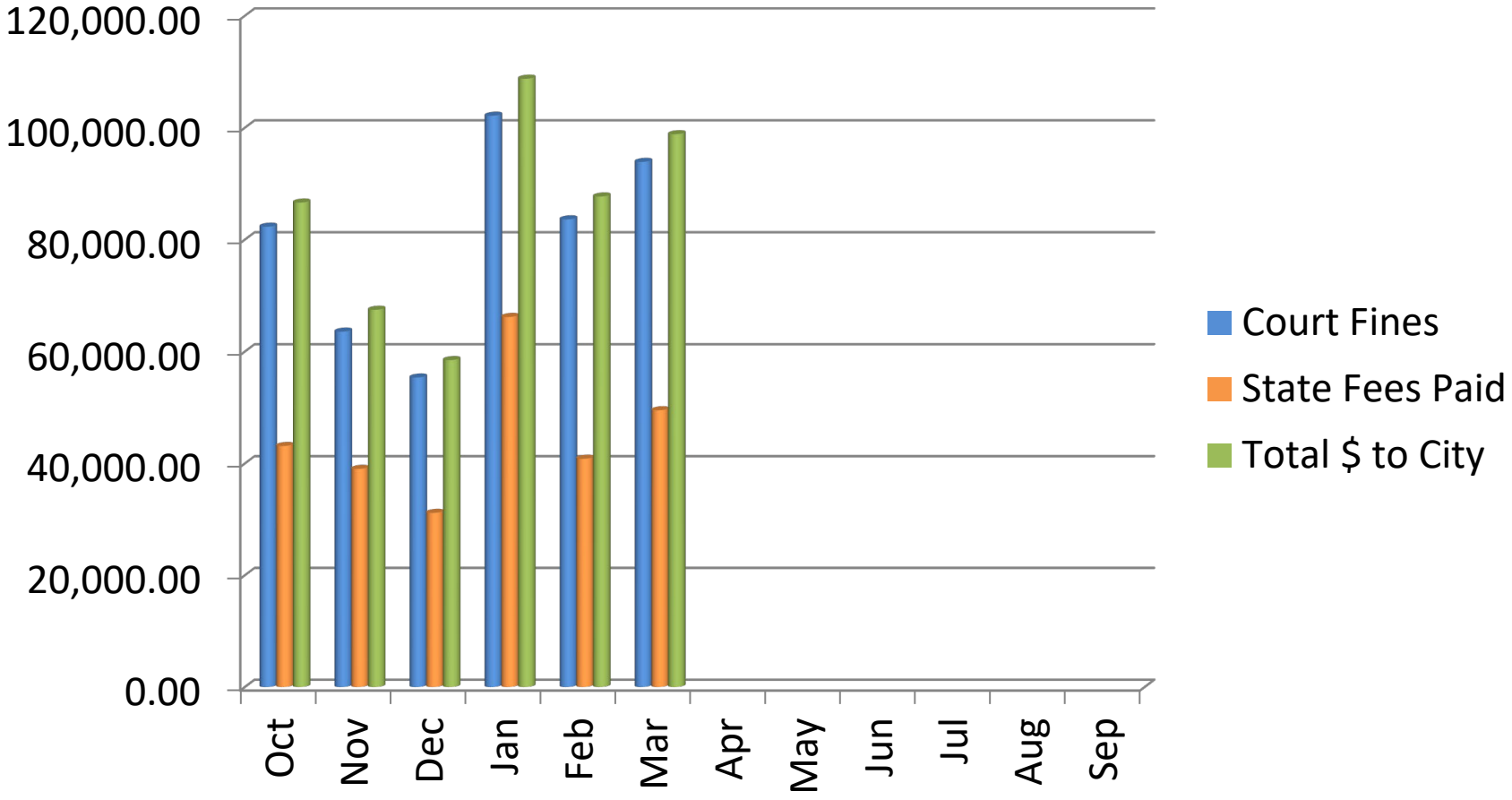

TOTAL CITY REVENUE FROM COURT

(4 year comparison)

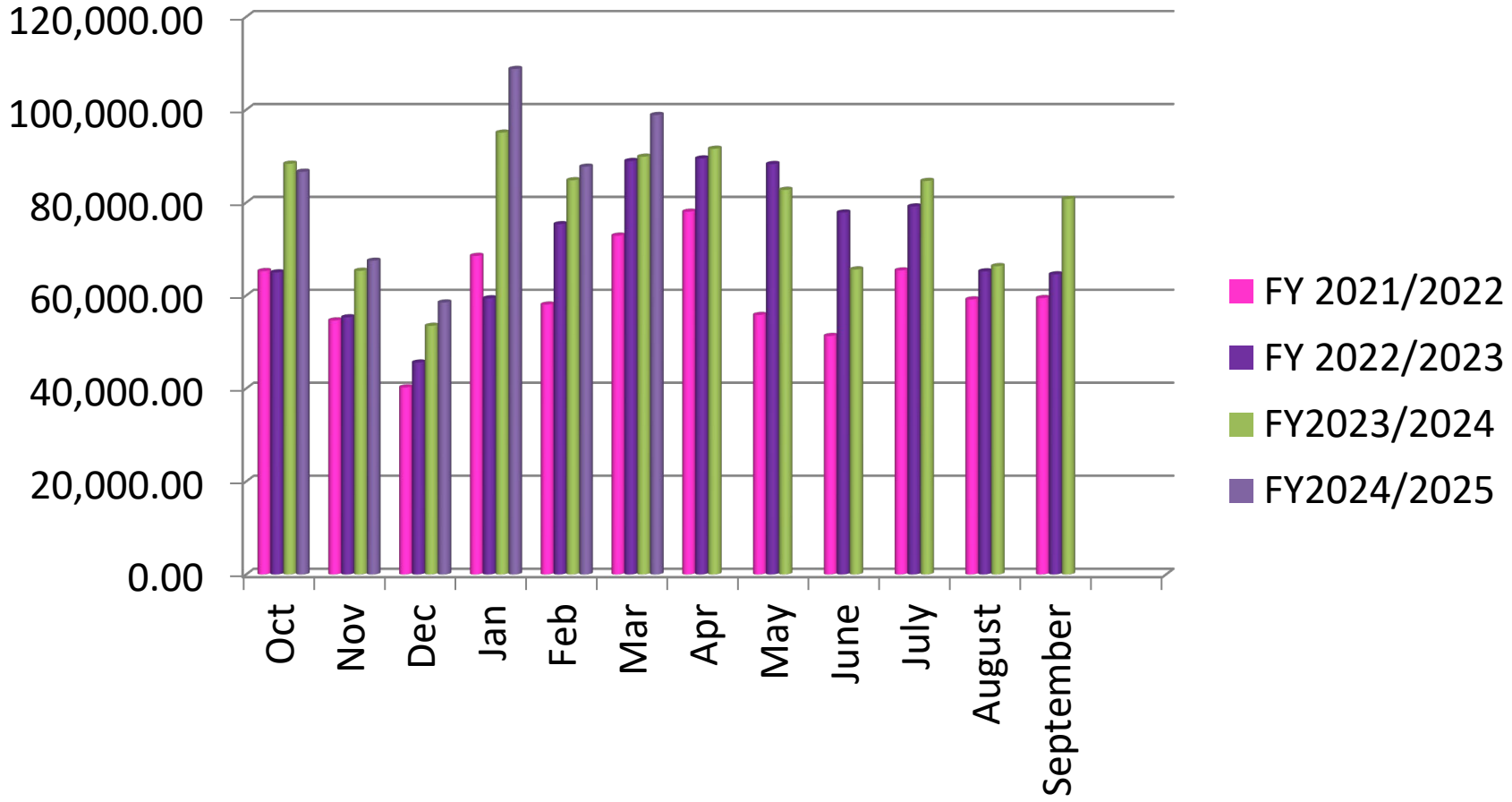

WARRANT COMPARISON OF FINES AND FEES COLLECTED

(FY 2023/2024 vs FY 2024/2025)

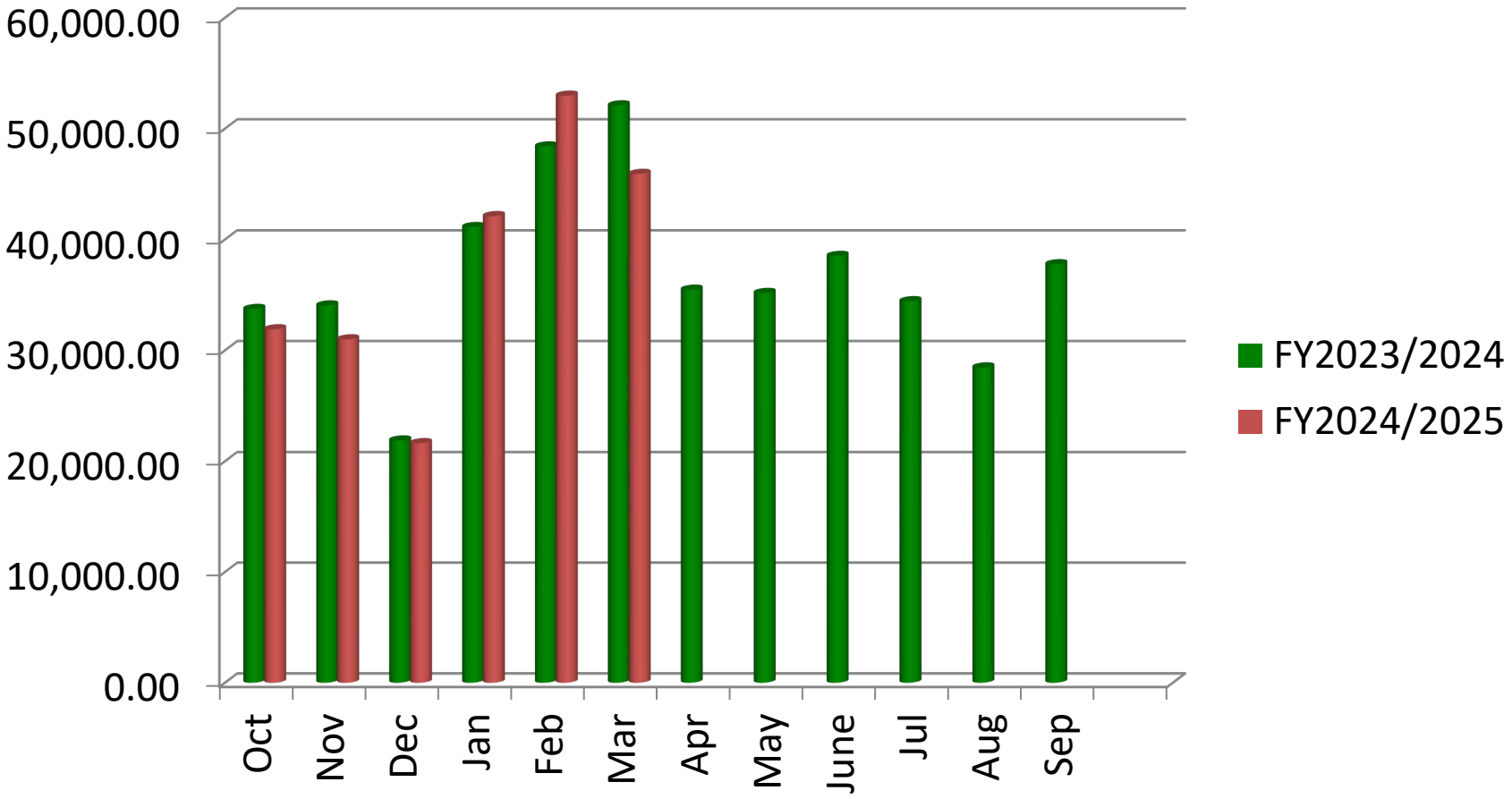

PROJECT HIGHLIGHTS

- WLL granite entrance – 36 yards - $1600 (Fig. 1&2)
- Assist WLL with field prep and clean up for opening
- Assist Bueche dead tree removal
- Homeless encampment removed – Jim Seal
- Homeless encampment removed – 4800 Walzem
- Homeless encampment removed – 8940 Fourwinds (Fig.3)
- Cleared fallen tree from walking trail (Fig. 4)
- Cleared fallen tree from street – Bayou Bend
- Dead tree removal from Windy Hollow Pond
- Dead tree removal drainage and green spaces – 11 trees. 15 removed FY 24/25 more to come
- Alley repairs- Paved alleys – 3,650 lbs asphalt - $1125 (Fig. 5)
- Drainage mud blockage cleared- Crosswind
- Walzem Creek drainage ditch repair -72 yards base, 9,712 lbs cement, 4 days - $3400 (Fig. 6-8)
- Windy Hollow Drainage repairs– 10 yards base, 1750 lbs cement, 2 days - $800 (Fig. 9&10)
- Dog Park minor accessibility improvements
- New Dog Park gate latches
- Tennis court windscreen repair – looking replacement possible funding opportunities
- Aeration and fertilization – City Hall, Civic Center, Windway Island
- Irrigation repair – Civic Center
- Irrigation repair – Windway Island
- Maint. Yard back lot clean up
- Assist with Palladium brush fire – NE perimeter & hot spots, used 7 extinguishers. (Fig. 11)
- Work begun on Brook Falls fountains repairs
- Deploy and remove Citywide Yard Sale signs
- Deploy brush and bulk pick up section signs

Special Mentions:

New XUV transfer from PD/FD
New Certification Pay – Training

Street Sweeping:

- Total recorded sweeping hours: 144
- Total # of days equaling: 18
- Total out of service days: 3- Dr. Appointments

Future projects:

- Alley repairs.
- Non oak trimming.
- Tree planting in spring/ ”Adopt a Tree” Program
- Continue Crack Seal
- Additional stop sign flashers
- Willmon Way alley light poles

City wide sidewalk and curb repairs

Mission Statement

The Windcrest Public Works Department strives to create a safe, beautiful, and inclusive environment for all residents and visitors.

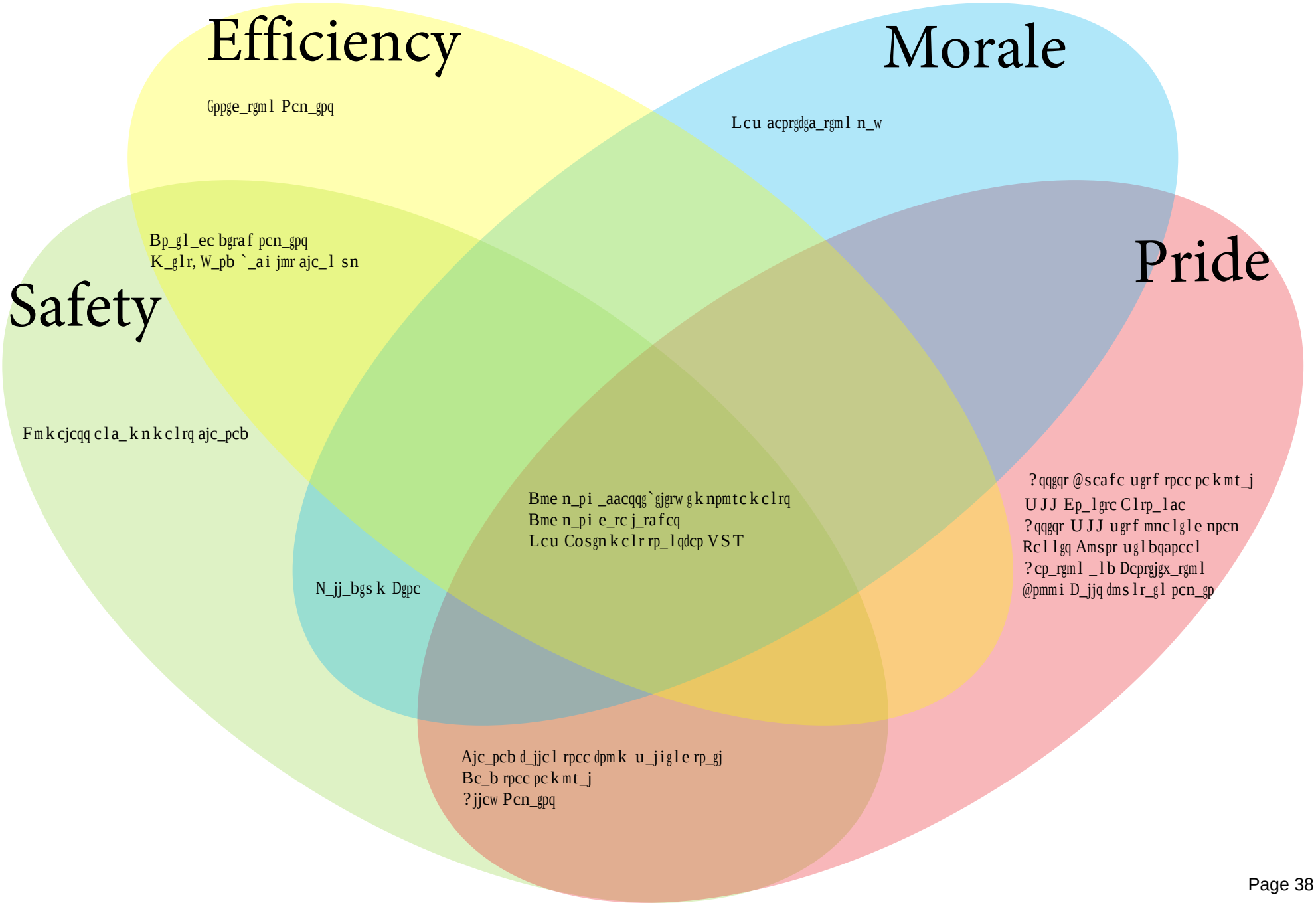

Fig.1

Fig. 2

Fig.3

Fig.4

Fig.5

Fig. 6

Fig.7

Fig.8
CAT

Fig.09

Fig. 10

Fig. 11

WINDCREST
ECONOMIC DEVELOPMENT CORPORATION
SMALL TOWN, BIG OPPORTUNITY

WEDC Report to the City Council – April 21, 2025
Jennifer Newman, President of the Board

Project Activity

In March, three active prospects visited Windcrest: an international bakery and café company considering a building on Walzem, a local franchisee of a national chain searching for space in the area, and a regional restaurant operation exploring a site on Interstate 35 for a new building. All three have identified Windcrest as a finalist location. These prospects represent food and beverage operations that would introduce new offerings to the northeast region.

Leads and Prospect Development

We generated six additional leads in March through cold calling, state referrals, and local broker collaborations. We are currently analyzing and screening these leads to assess their suitability for Windcrest.

We met with ICP leadership to review the leads and discuss building renovations. During the meeting, WEDC and the Mayor shared ideas for prospective development efforts and identified sectors that could be a good fit for the park. While challenges with the demolition contractor have delayed site preparation and column removal, ICP is confident these issues will be resolved shortly.

Business Retention/Expansion/Technical Assistance

We continued our Business Retention and Expansion (BRE) visits, meeting with nine local businesses, including Smoothie King, Streams of Joy, Alamo Classroom Solutions, Buffalo Wild Wings, Lonestar Pest Solutions, Ability Backflow, TA-CU Counseling & Administration, and the Wesley Nurse Program, to gather information and offer technical assistance.

Real Estate

The WEDC board has approved the agreement for permanent access points to the Builders Mark property. Both the prospective new owner, represented by MERIT Real Estate, and the current owner's counsel have agreed to the proposal, which is now awaiting final approval from ICP. With the inspection period ending soon, we aim to finalize this agreement in April.

New Businesses

There were no announcements of new businesses in March.

Other Business

Karen participated in two professional development webinars in March. The first, hosted by the Texas Municipal League and titled "Keep Your Finger on the Pulse," discussed pending legislative bills that could impact cities, EDCs, and other governmental agencies. The second, presented by the Texas Economic Development Council, focused on Municipal Development Districts (MDDs) and covered best practices and strategies for success.

WEDC Social Media Analytics
January 2025 through March 2025

	January	February	March
FACEBOOK			
Total Followers	328	336	347
Total Posts/Reels/Stories	40	34	68
Facebook Reach	806	665	4.7K
Content Interactions	198	167	383
GOOGLE			
Business Profile Interactions	34	35	38
Business Profile Views	336	334	208
Called Us	0	2	1
Map Direction Requests	18	26	30
Clicks from Google to Website	16	7	7
INSTAGRAM			
Total Followers	759	757	756
Total Posts/Reels/Stories	29	29	40
Instagram Reach	738	520	998
Content Interactions	62	73	67
LINKEDIN			
Total Followers	104	104	104
# of Posts	29	24	34
Page Views	4	4	3
THREADS			
Total Followers	167	168	169
Total Posts/Reels/Stories	15	11	29

If you wish to receive a more detailed report with additional statistics, please contact Karen at the WEDC.

Office of City Secretary

Department Head Report for the month of March 2025

Contracted Building Official

- Permit Inspections: 48
- Health Inspections: 12
- Plan Reviews: 25
- Total Expense: $6,170.00

Building Permits

- Permits Issued: 81
- Total Payments: $24,718.25

Public Information Requests

Requests Received: 40

- 3 Court Records
- 16 OCS/Permits Division
- 15 PD Incident Report Requests
- 5 PD Audio/Video Requests
- 1 Crash Report Requests

MPN Project Volume
March 2025

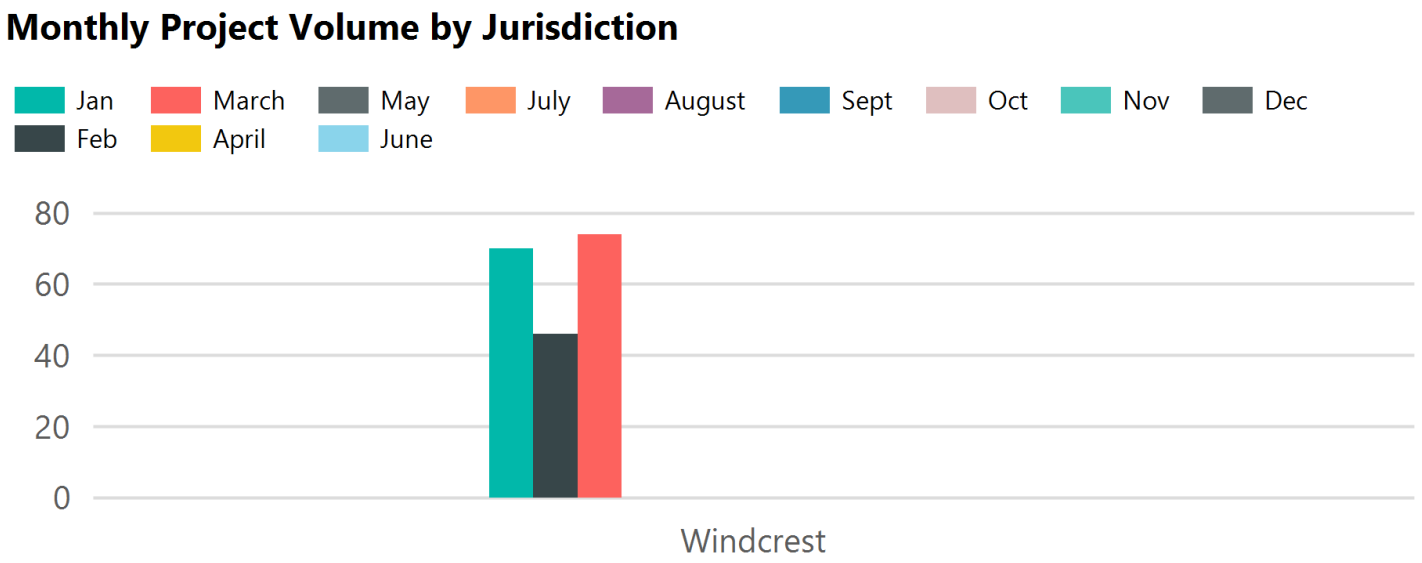

Jurisdiction	Jan	Feb	March	April	May	June	July	August	Sept	Oct	Nov	Dec	Year Total
Windcrest, TX	70	46	74	0	0	0	0	0	0	0	0	0	190
Totals:	**70**	**46**	**74**	**0**	**0**	**0**	**0**	**0**	**0**	**0**	**0**	**0**	**190**

Public Information Request Monthly Summary

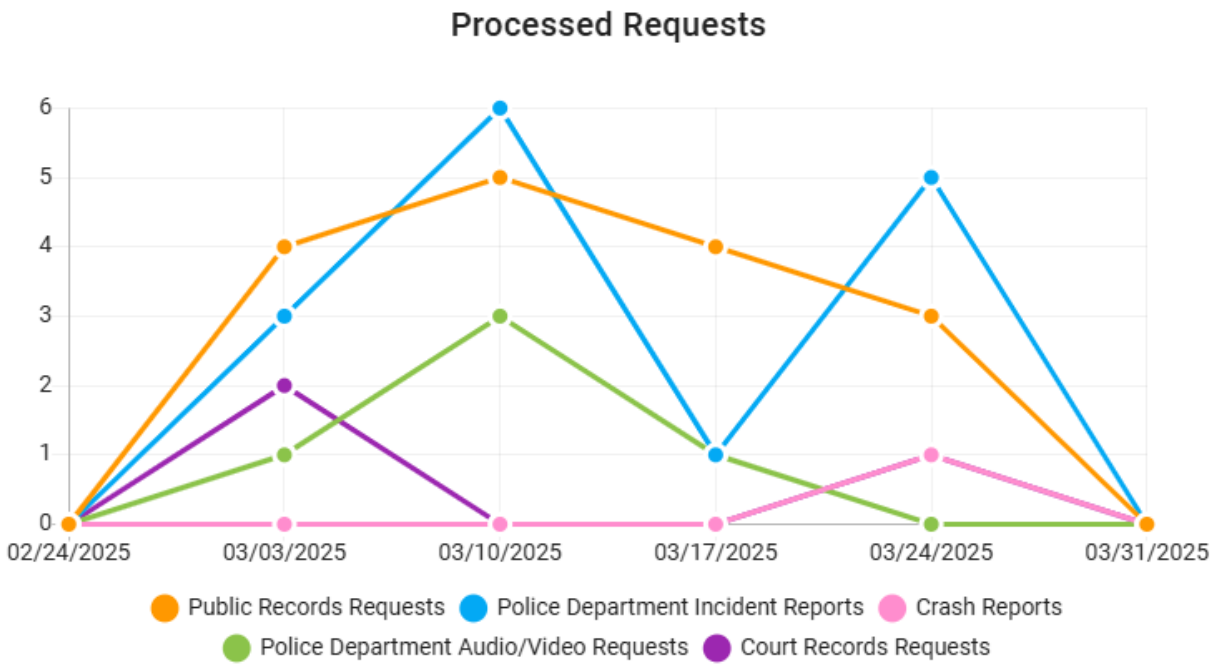

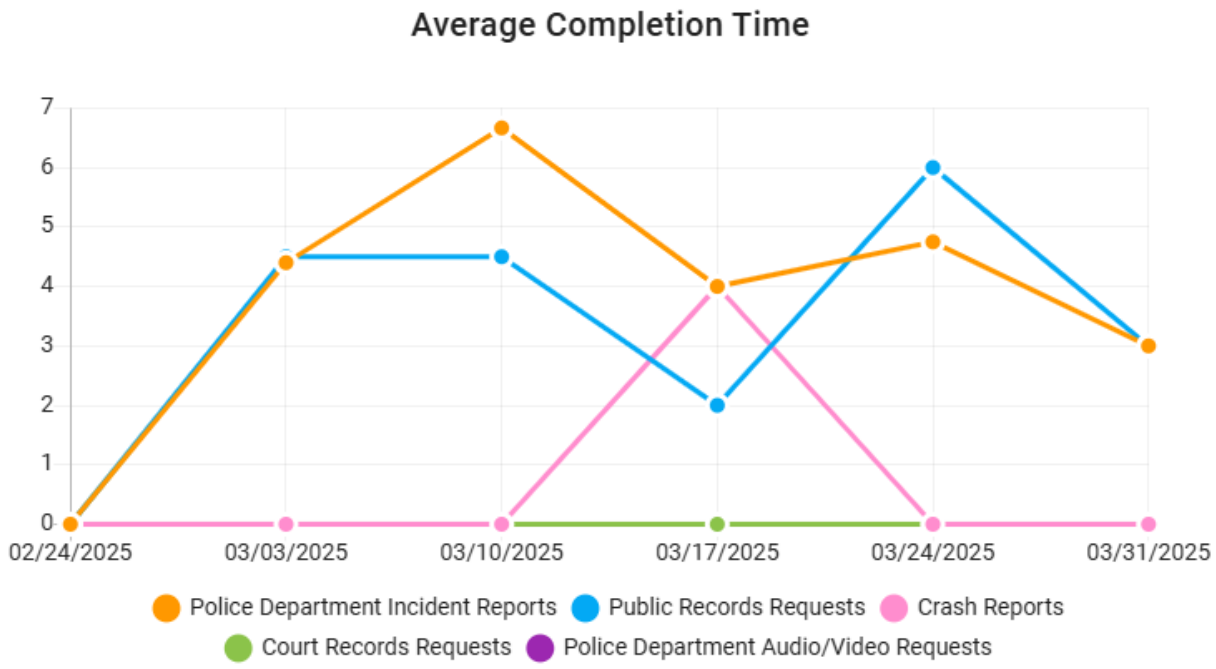

16	15	1
Public Records Requests	Police Department Incident Reports	Crash Reports
5	3	
Police Department Audio/Video Requests	Court Records Requests	

4.75	3.67	4
Police Department Incident Reports	Public Records Requests	Crash Reports
0	0	
Court Records Requests	Police Department Audio/Video Requests	

Public Information Request YTD Summary

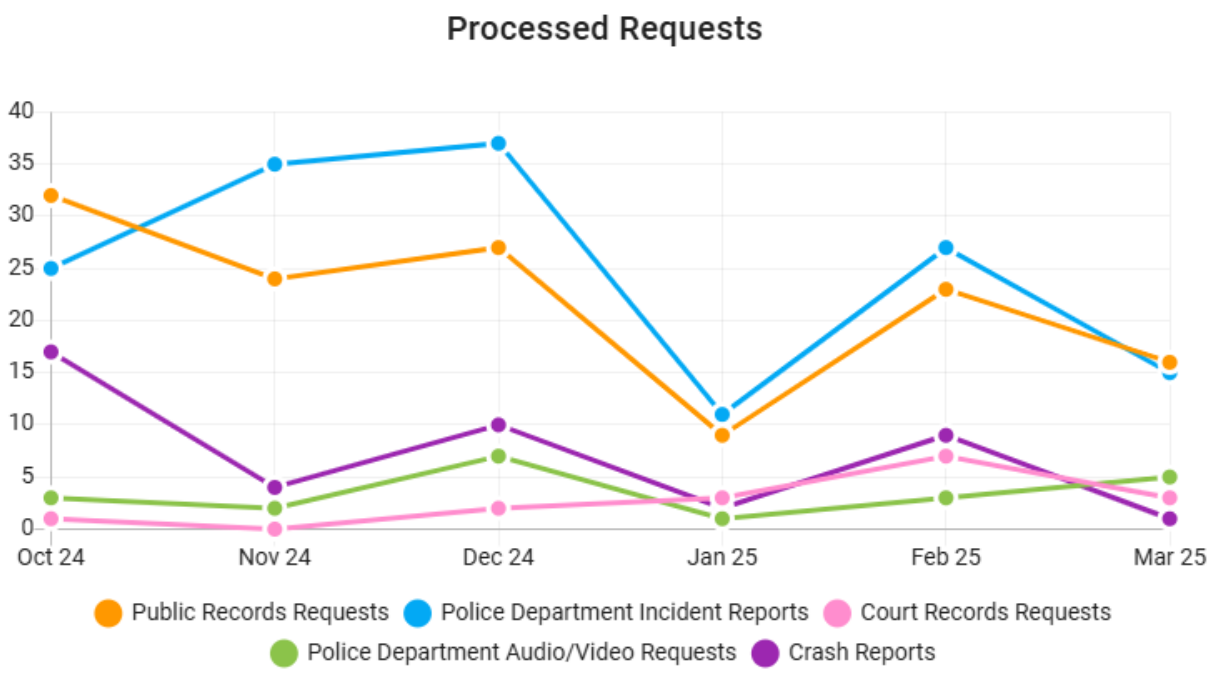

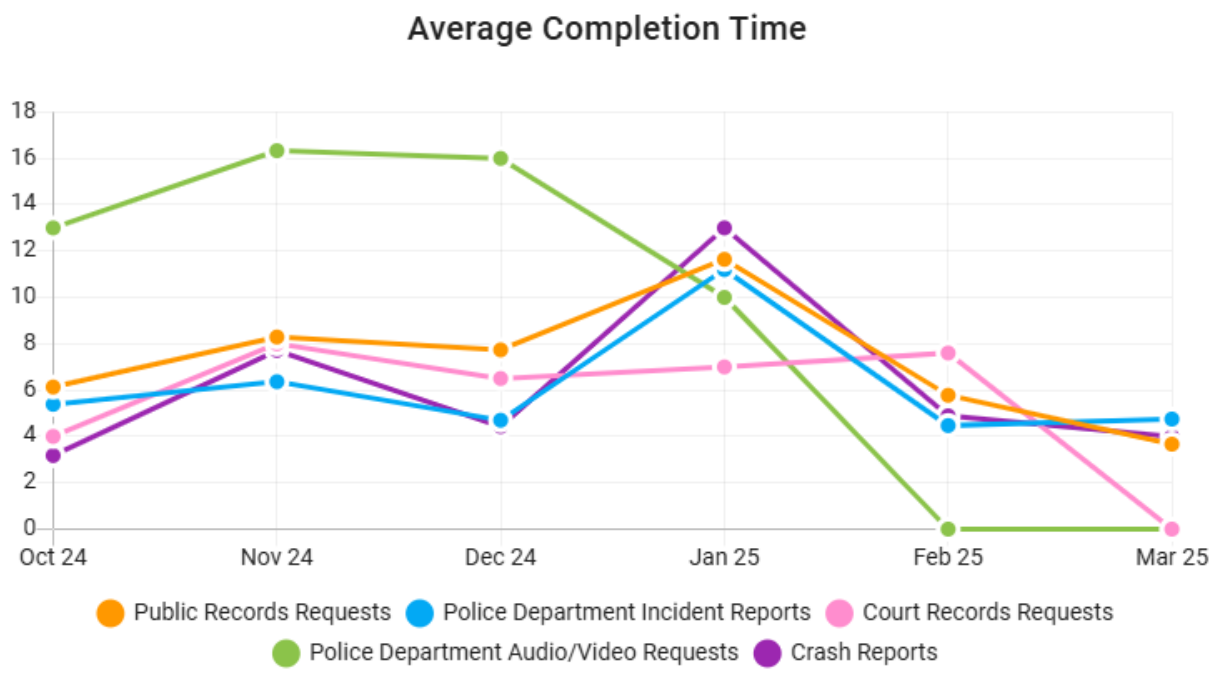

131	150	16
Public Records Requests	Police Department Incident Reports	Court Records Requests
21	43	
Police Department Audio/Video Requests	Crash Reports	

7.28	5.87	6.53
Public Records Requests	Police Department Incident Reports	Court Records Requests
14.73	4.76	
Police Department Audio/Video Requests	Crash Reports	

Public Information Request Annual Summary

TYPE OF REQUEST	21/22	22/23	23/24	24/25
Public Records Requests	355	188	158	131
Police Department Incident Reports	0	265	216	150
Crash Reports	244	139	169	43
Police Department Audio/Video Requests	0	24	39	21
Court Records Requests	0	21	20	43
Total # Requests	**599**	**637**	**602**	**361**
Average Total by Month	**50**	**53**	**50**	**60**

March Post Office Sales

Department	Item Name	Qty Sold	Ext Price
110 Meter Postage	First Class Flat	201	433.47
110 Meter Postage	Certified Mail	65	315.25
110 Meter Postage	Flat Rate Legal Mailer	1	10.4
110 Meter Postage	Ground Advantage	239	2,421.65
110 Meter Postage	Express Mail	8	297.98
110 Meter Postage	First Class Letter	262	192.83
110 Meter Postage	Certified Return Receipt ONLY	37	331.15
110 Meter Postage	Media Mail	10	55.3
110 Meter Postage	Priority Flat Rate Envelope	63	636.3
110 Meter Postage	Return Receipt	6	24.6
110 Meter Postage	Insurance	5	167
110 Meter Postage	Priority Mail	69	1,105.30
110 Meter Postage	Medium Flat Rate	21	402.15
110 Meter Postage	Padded Flat Rate Mailer	5	54.25
110 Meter Postage	Express Flat Rate Envelope	4	125.6
110 Meter Postage	Large Flat Rate	12	315.6
110 Meter Postage	Small Flat Rate	18	191.7
110 Meter Postage		1,026	7,080.53
090 Global/Envelopes	Stamped Envelope	26	24.7
090 Global/Envelopes	Global Daisy Intl.	37	61.05
090 Global/Envelopes		63	85.75
007 Forever Stamps	Madona & Child Book	3	43.8
007 Forever Stamps	Book of Flags	77	1,124.20
007 Forever Stamps	Flag Coil	9	657
007 Forever Stamps	Purple Heart Stamp	1,214	886.22
007 Forever Stamps		1,303	2,711.22
		2,392	9,877.50

March Post Office Sales

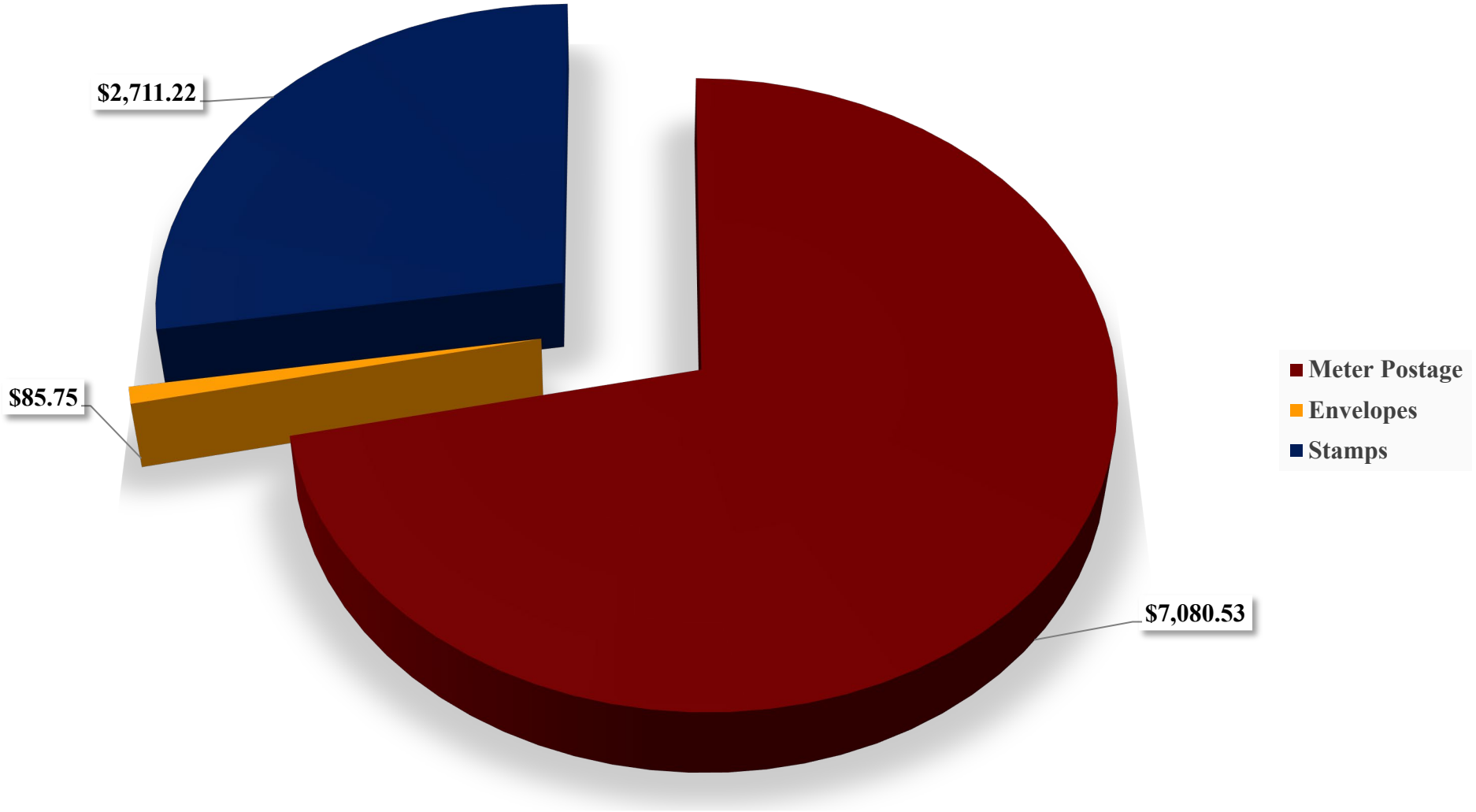

Monthly Sales FY 24-25

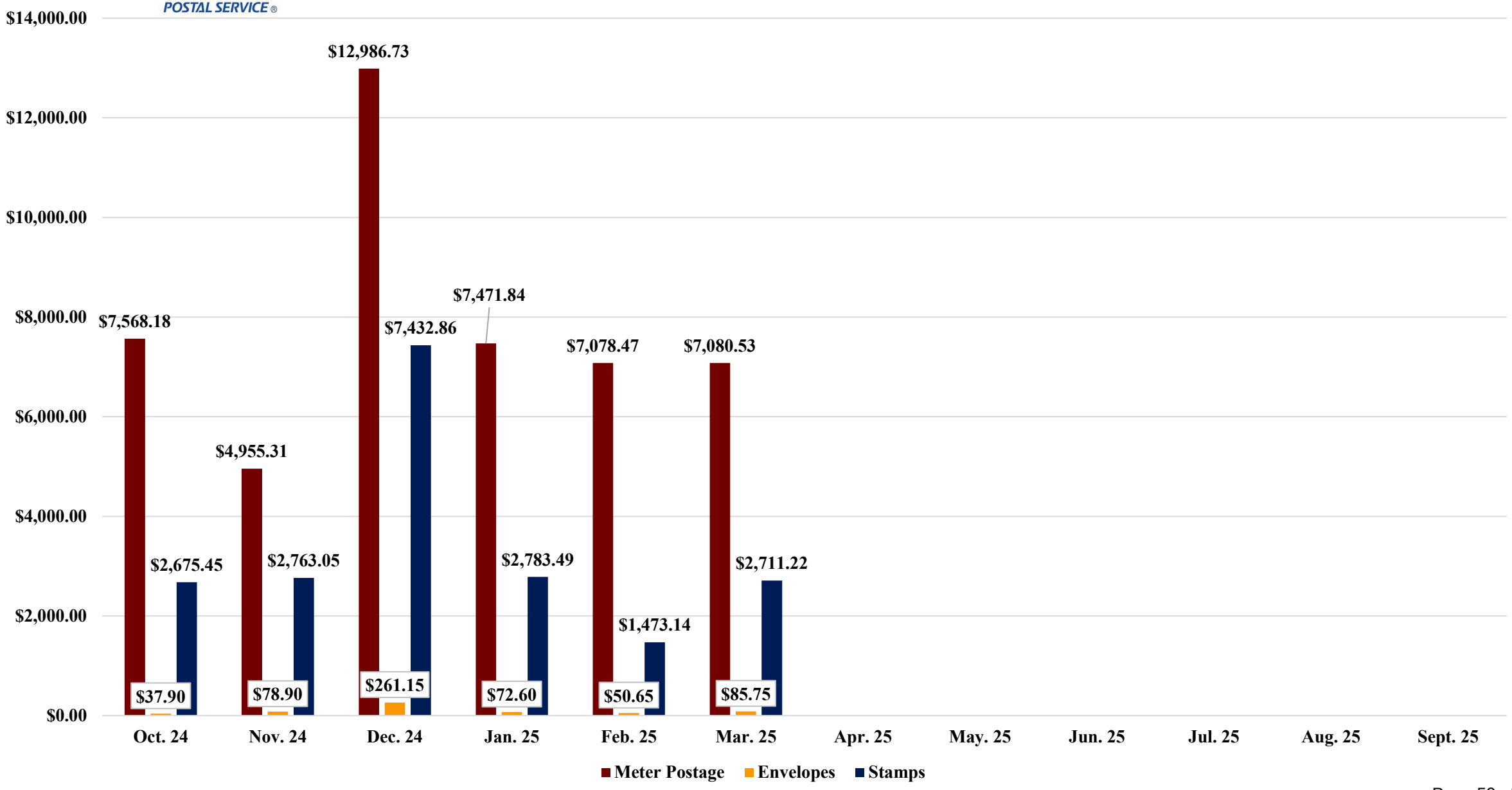

Customers FY 24-25

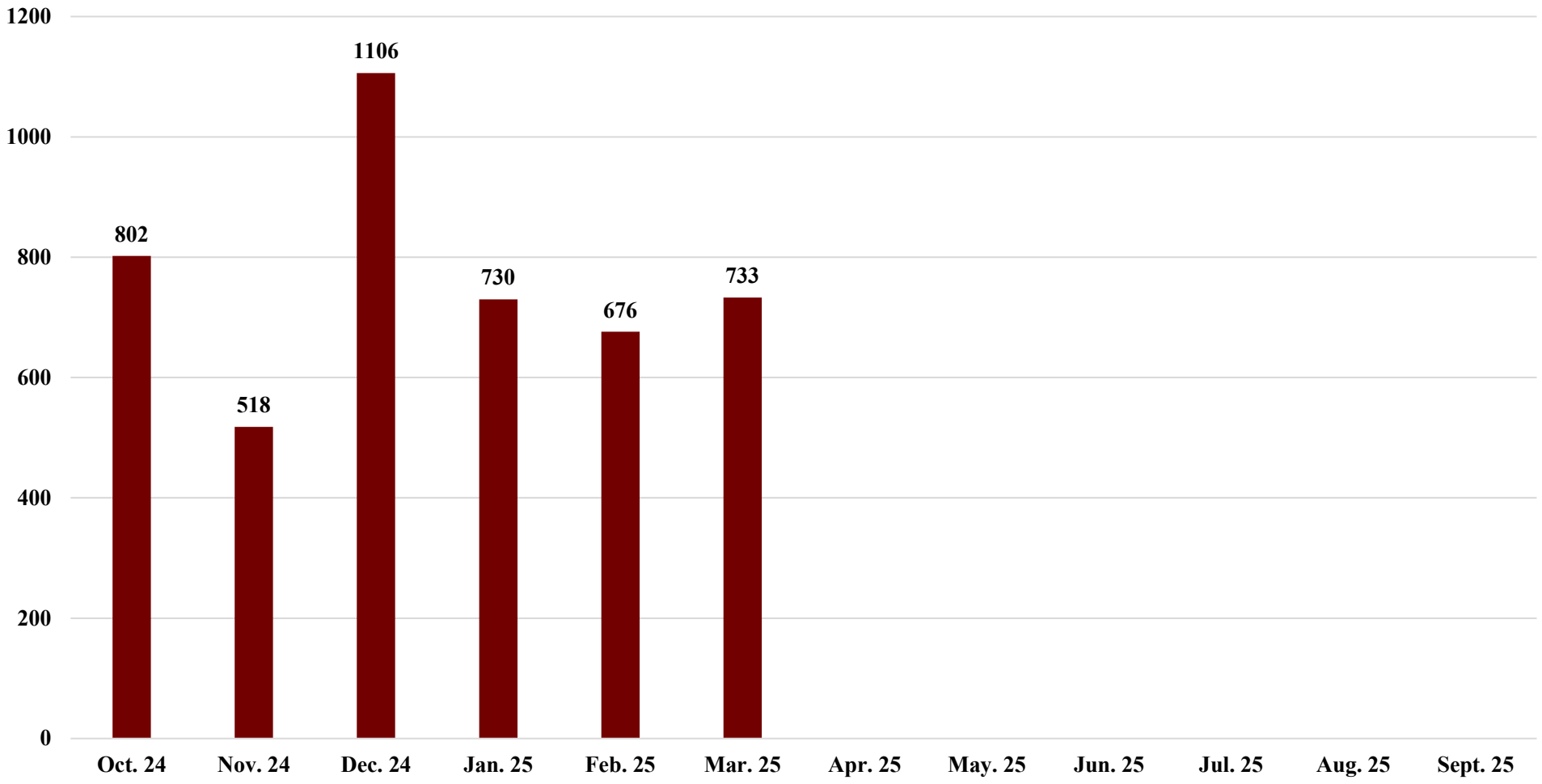

Post Office Closures

- January 1, 2025 – New Year's Day
- January 20, 2025 – Martin Luther King Jr. Day
- January 21-31, 2025 – Closed 1 hour for Lunch (12pm-1pm)
- February 1-28, 2025 – Closed 1 hour for Lunch (12pm-1pm)
- February 17, 2025 – President's Day
- March 1-31 – Closed 1 hour for lunch (12pm-1pm)

of Events Per Month

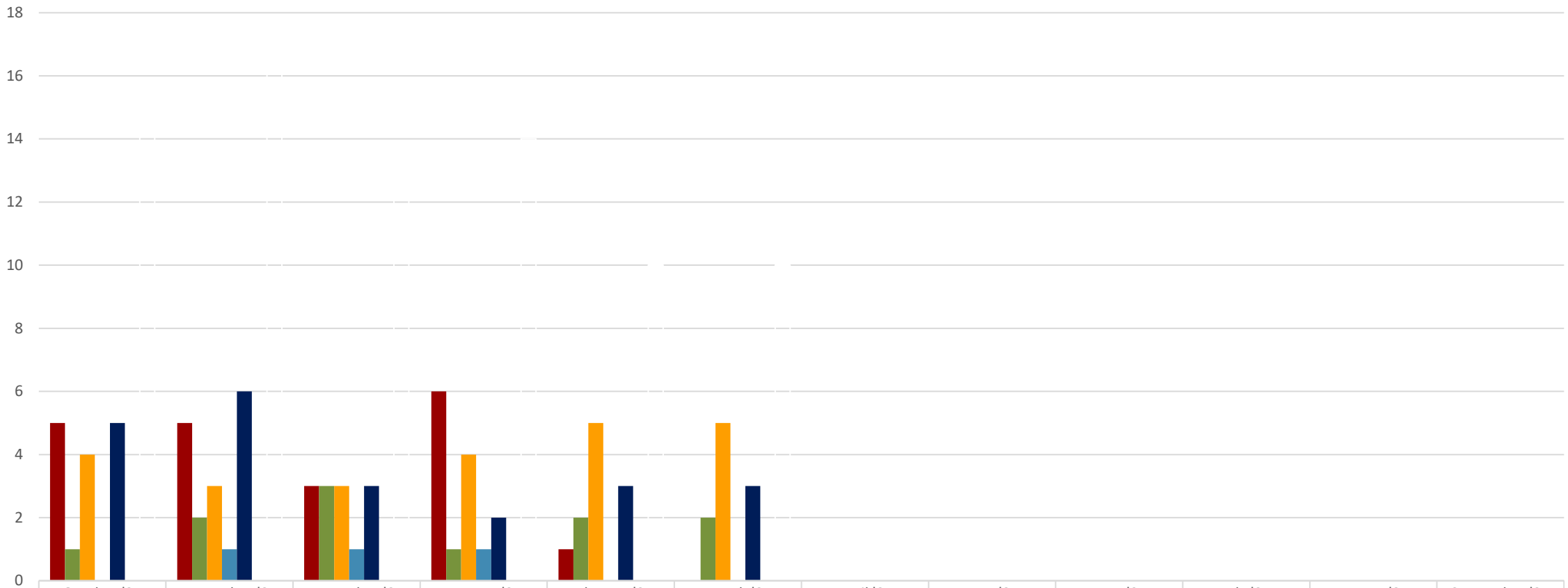

	October '24	November '24	December '24	January '25	February '25	March '25	April '25	May '25	June '25	July '25	August '25	September '25
Residential	5	5	3	6	1	0						
Non-Resident	1	2	3	1	2	2						
Windcrest Civic Group	4	3	3	4	5	5						
Non-Profit	0	1	1	1	0	0						
City Events	5	6	3	2	3	3						
Misc Rental												
Total Events	15	17	13	14	10	10	0	0	0	0	0	0

FY 2024/2025 Civic Center Fees Collected

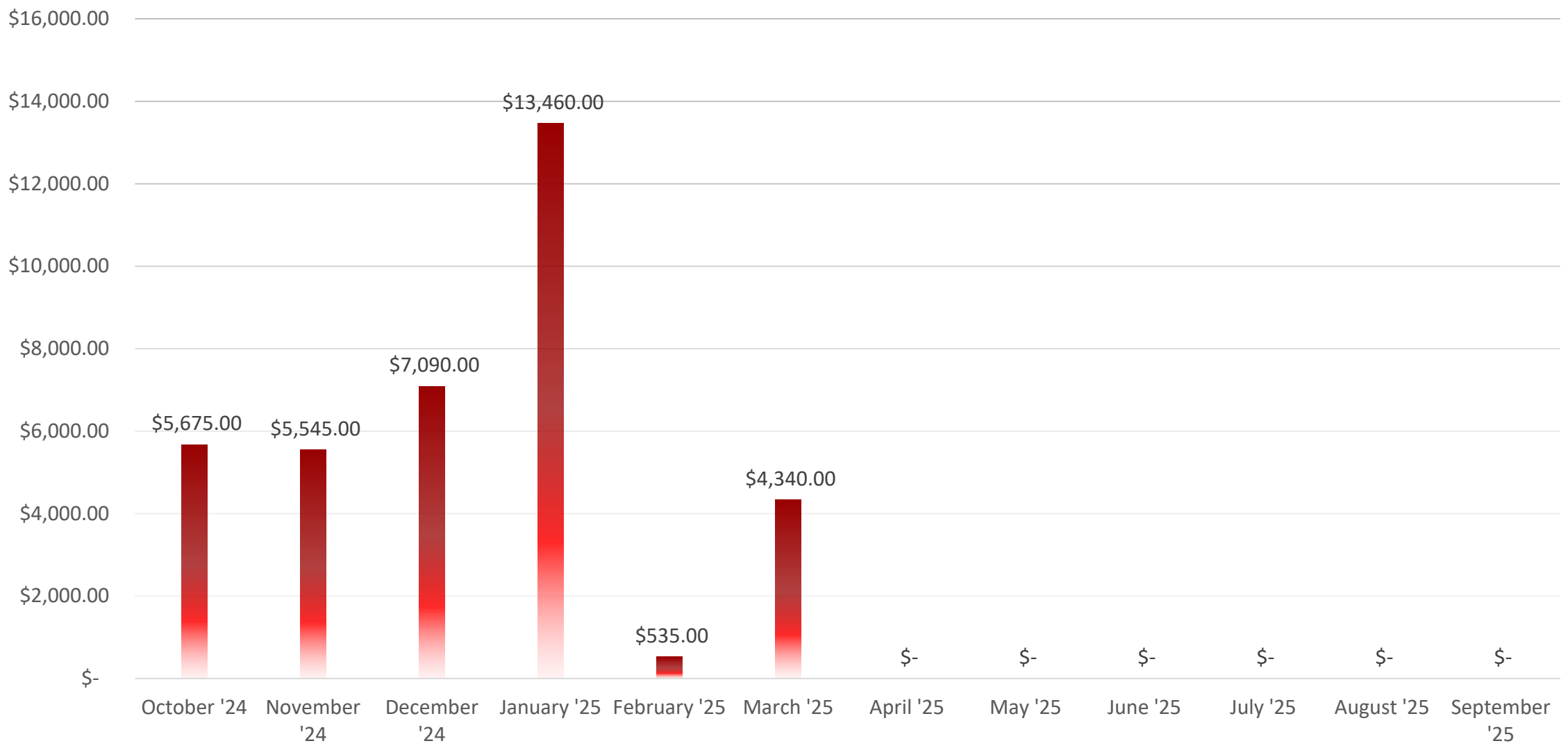

Civic Center Historical Fee Collection Summary

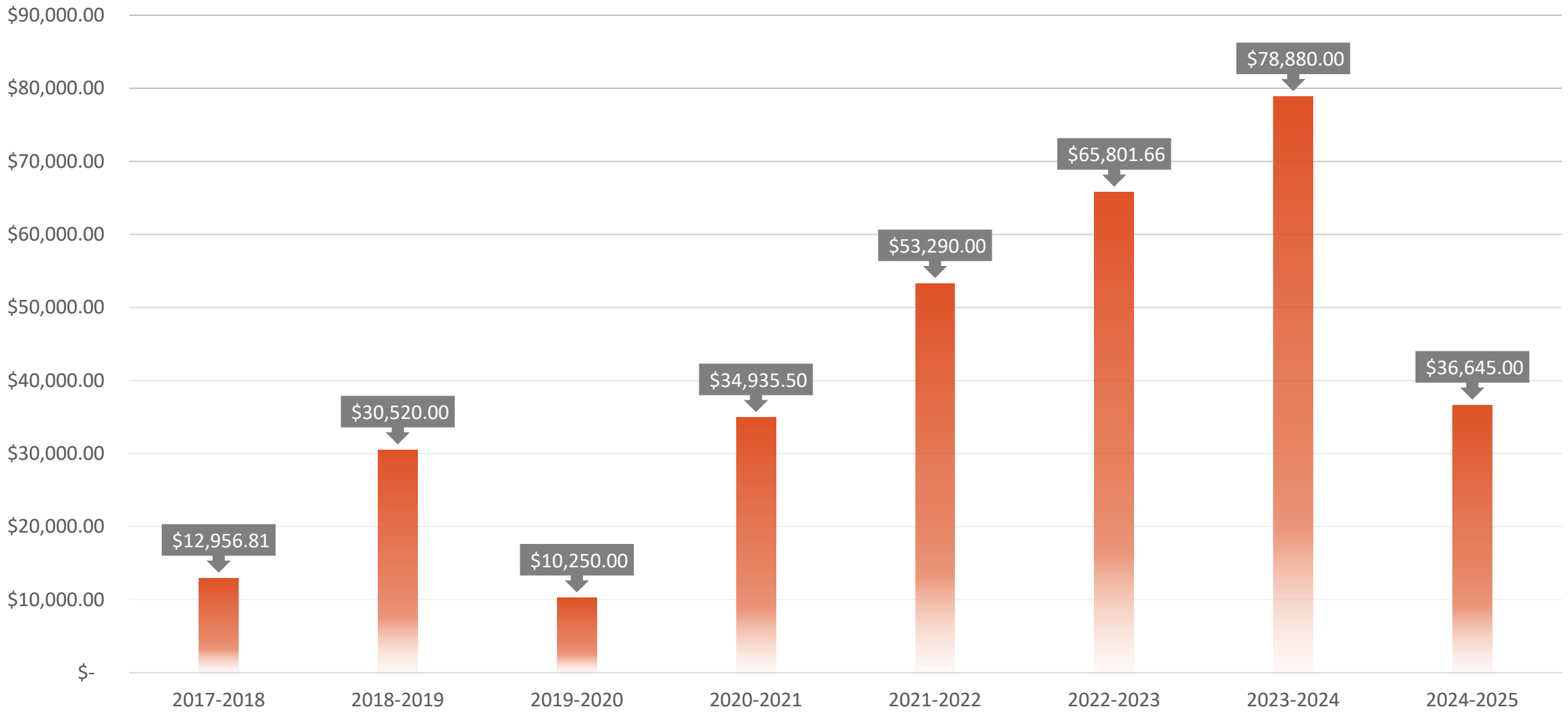

NEW FACILITY FOR

TAKE 5 OIL CHANGE

5331 WALZEM ROAD
SAN ANTONIO, TX 78218
TDLR # TABS2025006662

RE-ISSUE FOR PERMIT

ABBREVIATIONS

℄	CENTER LINE
#	POUND or NUMBER
<	ANGLE
	- A -
A.B.	ANCHOR BOLT
A/ C	AIR CONDITIONING
A.C.	ASPHALTIC CONCRETE
A.C.T.	ACOUSTICAL CEILING TILE
A.F.F.	ABOVE FINISH FLOOR
A.F.G.	ABOVE FINISH GRADE
ALT.	ALTERNATE
A.S.T.M.	AMERICAN SOCIETY FOR TESTING & MATERIALS
	- B -
BLDG.	BUILDING
BOT.	BOTTOM
B.O.	BOTTOM OF
B.O.A.	BACK OF HOUSE
	- C -
C.B.	CATCH BASIN
C.J.	CONTROL JOINT
CLG.	CEILING
CLR.	CLEAR
CMU	CONCRETE MASONRY UNIT
C/O	CLEANOUT
COL.	COLUMN
COMM.	COMMUNICATION
CONC.	CONCRETE
CONT.	CONTINUOUS
CONTR.	CONTRACTOR
C.W.	COLD WATER
	- D -
DEPT.	DEPARTMENT
DTL.	DETAIL
D.F.	DRINKING FOUNTAIN
DIA.	DIAMETER
DIM.	DIMENSION
DN.	DOWN
D.S.	DOWN SPOUT
DWG.	DRAWING
	- E -
(E)	EXISTING
EA.	EACH
EIFS	EXTERIOR INSULATION FINISH SYSTEM
ELEC.	ELECTRICAL
ENCL.	ENCLOSURE
E.J.	EXPANSION JOINT
EQ.	EQUAL
EQUIP.	EQUIPMENT
EXIST.	EXISTING
EXT.	EXTERIOR
	- F -
F.D.	FLOOR DRAIN
FIN. FLR.	FINISH FLOOR
FIN.	FINISH
FLUOR.	FLUORESCENT
F.F.	FACE OF
F.R.F.	FIBERGLASS REINFORCED PANEL
F.S.	FLOOR SINK
FT.	FOOT/FEET
FTG.	FOOTING
FURR.	FURRING
	- G -
GA.	GAUGE
GALV.	GALVANIZED
G.C.	GENERAL CONTRACTOR
G.I.	GALVANIZED IRON
GND.	GROUND
GR.	GRADE
GYP. BD.	GYPSUM BOARD
	- H -
H.B.	HOSE BIBB
H.C.	HOLLOW CORE
HDR.	HEADER
HDW.	HARDWARE
HR.	HOUR
HT.	HEIGHT
H.M.	HOLLOW METAL
HOR.	HORIZONTAL
HTG.	HEATING
HVAC	HEATING VENTILATION & AIR CONDITIONING
H.W.	HOT WATER
	- I -
I.D.	INSIDE DIMENSION/DIAMETER
I.E.	INVERT ELEVATION
INSUL.	INSULATION
INT.	INTERIOR
	- L -
LAM.	LAMINATED
LAV.	LAVATORY
LBS.	POUNDS
L.L.	LANDLORD
	- M -
MAX.	MAXIMUM
MDF.	MEDIUM DENSITY FIBERBOARD
MECH.	MECHANICAL
MTL.	METAL
MFR.	MANUFACTURER
M.H.	MAN HOLE
MIN.	MINIMUM
MISC.	MISCELLANEOUS
MTD.	MOUNTED
M.O.	MASONRY OPENING
MUL.	MULLION
	- N -
(N)	NEW
N.I.C.	NOT IN CONTRACT
NO.	NUMBER
N.R.	NON RATED
N.T.S.	NOT TO SCALE
	- O -
O.C.	ON CENTER
O.D.	OUTSIDE DIMENSION/DIAMETER
OPP.	OPPOSITE
	- P -
P.L.	PROPERTY LINE
PLBG.	PLUMBING
PLWD.	PLYWOOD
P.O.C.	POINT OF CURVATURE
P.S.I.	POUNDS PER SQUARE INCH
P.T.	PRESSURE TREATED
	- R -
R.	RISER
(R)	RELOCATED
RAD.	RADIUS
R.D.	ROOF DRAIN
RE:	REFERENCE
REFR.	REFRIGERATED
REINF.	REINFORCED
REQ'D.	REQUIRED
RM.	ROOM
R.O.	ROUGH OPENING
R.O.W.	RIGHT OF WAY
RCP	REFLECTED CEILING PLAN
	- S -
S.C.	SOLID CORE
SCHED.	SCHEDULE
SECT.	SECTION
SHT.	SHEET
SIM.	SIMILAR
SPEC.	SPECIFICATION
SQ.	SQUARE
S.S.	STAINLESS STEEL
ST.	STEEL
STD.	STANDARD
STOR.	STORAGE
STRUCT.	STRUCTURAL
S.O.V.	SHUT OFF VALVE
SUSP.	SUSPENDED
	- T -
T.	TREAD
TEL.	TELEPHONE
TEMP.	TEMPERATURE
T & G	TONGUE & GROOVE
T.O.	TOP OF
T.S.	TUBE STEEL
TYP.	TYPICAL
	- U -
U.O.N.	UNLESS OTHERWISE NOTED
U.L.	UNDERWRITERS LABORATORY
	- V -
VERT.	VERTICAL
V.C.T.	VINYL COMPOSITE TILE
V.T.R.	VENT THROUGH ROOF
V.I.F.	VERIFY IN FIELD
	- W -
W/	WITH
W.C.	WATER CLOSET
WD.	WOOD
W.H.	WATER HEATER
W/O	WITHOUT
W.W.F.	WELDED WIRE FABRIC

ANNOTATION SYMBOL LEGEND

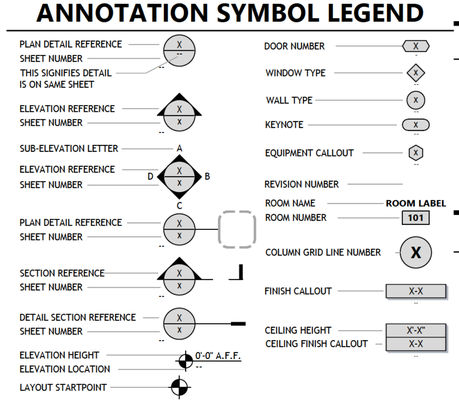

CODE ANALYSIS

BUILDING CODES

NATIONAL BUILDING CODE (IBC) WITH LOCAL AMENDMENTS
NATIONAL MECHANICAL CODE (IMC) WITH LOCAL AMENDMENTS
NATIONAL PLUMBING CODE (IPC)) WITH LOCAL AMENDMENTS
NAL ELECTRICAL CODE (NEC) WITH LOCAL AMENDMENTS
NATIONAL FIRE CODE (IFC)) WITH LOCAL AMENDMENTS
NATIONAL ENERGY CODE (IEC) WITH LOCAL AMENDMENTS
4117.1 FOR COMMERCIAL BUILDINGS
NICIPAL CODE

BUILDING SUMMARY

CONSTRUCTION TYPE:	V-B
SPRINKLERED/STANDPIPES	■ No ☐ Yes
USE/OCCUPANCY GROUP:	S-1 OCCUPANCY (PER SECTION 311.2 W/ 311.2.2 MOTOR VEHICLE REPAIR) COMPLYING WITH SECTION 406.8 U OCCUPANCY (PER SECTION 312) FOR TRASH ENCLOSURE
MIXED USE:	■ No ☐ Yes

ALLOWABLE BUILDING LIMITS

ALLOWABLE BUILDING HEIGHT:	40'-0" (PER IBC TABLE 504.3)
PROVIDED HEIGHT:	16'-3" (BUILDING); 19'-10" (TOWER)
ALLOWABLE NUMER OF STORIES:	1 (PER IBC TABLE 504.4)
PROVIDED NUMBER OF STORIES:	1
ALLOWABLE BUILDING AREA:	9,000 S.F. (NON-SEPARATED OCCUPANCIES)

PROVIDED BUILDING AREA:

EXPRESS OIL CHANGE	1,682 SQ. FT.
TRASH ENCLOSURE	121 SQ. FT.
Building area total	1,771 SQ. FT.

ETY SYSTEM REQUIREMENTS:
601: 0 FIRE RESISTANCE
602: + 30 FEET TO
RTY LINES, THEREFORE,
E RESISTANCE
REMENTS
ECTED OPENINGS TABLE
NOT LIMITED + 30 FEET
ET NOT REQ. PER
TION 705.11

LIFE SAFETY SYSTEM REQUIREMENTS:

Emergency Lighting:	☐ NO	■ YES
Exit Signs:	☐ NO	■ YES
Fire Alarm:	■ NO	☐ YES
Smoke Detection Systems:	■ NO	☐ YES
Panic Hardware:	■ NO	☐ YES
Life safety systems generator:	■ NO	☐ YES

INKLERS NOT REQUIRED PER CODE: 2021 IFC; SEC. 903 2.9
RM NOT REQUIRED PER CODE: 2021 IFC; SEC. 907

DEFERRED SUBMITTALS

THIS PROJECT HAS BEEN PERMITTED WITHOUT REVIEW AND/OR APPROVAL OF THE FOLLOWING DEFERRED SUBMITTALS. PLANS APPROVED BY THE LOCAL JURISDICTION SHALL BE OBTAINED FOR EACH DEFERRED ITEM LISTED BELOW PRIOR TO COMMENCING ANY WORK WITHIN THE SCOPE OF SUCH DEFERRAL. DEFERRALS MUST BE REVIEWED AND ACCEPTED BY THE ARCHITECT OR ENGINEER OF RECORD PRIOR TO SUBMITTING FOR REVIEW WITH THE LOCAL JURISDICTION.

NUFACTURED TRUSSES

SEPARATE PERMITS

A. ALL EXTERIOR SIGNAGE TO BE SUBMITTED AND PERMITTED SEPARATELY BY G.C.
B. EQUIPMENT TO BE SUBMITTED BY OTHERS. GC TO CONFIRM THAT ALL PERMITS, CERTIFICATIONS, AND SPECIAL INSPECTIONS TO ACQUIRE TCO/CO ARE ACCOUNTED FOR AT BEGINNING OF PROJECT AND TO SHARE THAT CONFIRMATION WITH THE DRIVEN BRANDS CONSTRUCTION MANAGER.

PROJECT INFORMATION

CLIENT:	TAKE 5 PROPERTIES SPV, LLC 440 SOUTH CHURCH ST., SUITE 700 CHARLOTTE, NC, 28202
PROJECT	TAKE 5 OIL CHANGE
ADDRESS:	5331 WALZEM ROAD SAN ANTONIO, TX 78218
JURISDICTION:	CITY OF SAN ANTONIO, TEXAS
ZONING:	B-1 NEIGHBORHOOD BUSINESS DISTRICT
SETBACKS:	FRONT 20'-0" SIDE 0'-0", 20'-0" STREET SIDE REAR 0'-0" BUFFERS 8'-0" ROW L.S.

LEGAL DESCRIPTION:
LOT 1, BLOCK 98, WINDCREST UNIT 24, IN THE CITY OF WINDCREST, BEXAR COUNTY, TEXAS, ACCORDING TO MAP OR PLAT THEREOF RECORDED IN VOLUME 7000, PAGE 170, DEED AND PLAT RECORDS, BEXAR COUNTY,TEXAS.

SITE DATA

SITE DATA

SITE AREA:	14,871 S.F. / 0.34 ACRE
BLDG. LOT COVERAGE:	11.3 %
LANDSCAPE AREA:	6,942 S.F.
LANDSCAPE COVERAGE:	46.7 %

REQUIRED PARKING:

PARKING REQUIRED:	5 STALLS
PARKING PROVIDED:	5 STALLS
ACCESSIBLE PARKING STALLS:	1
STANDARD PARKING STALLS:	4
COMPACT PARKING STALLS:	0
TOTAL PARKING SPACES:	5

PLUMBING FIXTURES

PLUMBING FIXTURE OCCUPANT LOAD PER 2021 PC TABLE 403.1 AND (50% MALE & 50% FEMALE)
USE GROUP S-1 150/ PERSON FACTOR FOR OFFICE AREA

OFFICE AREA	42 S.F. /150	1 OCC.
WAITING AREA	44 S.F. /15	3 OCC.
RESTROOMS	ACCESSORY AREA EXEMPT PER IPC TABLE 'A' **FOOTNOTE	
BACK ROOM (STORAGE)	112 S.F. /300	1 OCC.
SERVICE BAY	1,296 S.F. /200	7 OCC.
TOTAL		12 OCC.

MINIMUM PLUMBING FACILITIES PER IPC TABLE 403.1
(50% MALE & 50% FEMALE)

12 OCCUPANTS: 6 M & 6 F	WATERCLOSETS 1-100 MALE	WATERCLOSETS 1-100 FEMALE	URINAL	LAVATORIES 1-100 MALE	LAVATORIES 1-100 FEMALE
REQUIRED	1	1	0	1	1
PROVIDED	1	1	0	1	1

IPC SECT. 403.2 SPECIAL EXCEPTION NO.2; AS REQUIRED PROVIDING ONE ACCESSIBLE UNISEX RESTROOM FOR ALL EMPLOYEES AND CLIENT.

SCOPE OF WORK

THE PROPOSED PROJECT IS A NEW GROUND UP , ONE STORY 1,682 S.F. EXPRESS OIL CHANGE BUILDING WITH 3 SERVICE BAYS AS WELL AS SITE IMPROVEMENTS. THE BUILDING WILL CONSIST OF A CONCRETE SLAB ON GRADE (INCLUDING RECESSED SLAB AREAS AND OIL CHANGE SERVICE PITS), AND WOOD FRAMED WALLS, EXTERIOR WALLS FINISHED WITH EIFS , AND SINGLE PLY MEMBRANE ROOFING OVER RIGID INSULATION ON PLYWOOD DECK OVER WOOD FRAMED TRUSSES. THE INTERIOR SPACES WILL INCLUDE SERVICE BAYS, AN OFFICE, WAITING ROOM, BACK ROOM AND RESTROOM. INTERIOR WALLS WILL BE WOOD FRAMED.

THE SITE IMPROVEMENTS INCLUDE MODERATE FINE GRADING OF PAD, LANDSCAPING WITH IRRIGATION, CONCRETE PAVEMENT PARKING FIELD, SITE LIGHT FIXTURES & POLES WITH BASES, A 121 S.F. TRASH ENCLOSURE , AND A HARDSCAPE WALKWAY ALONG BUILDING LEADING TO PUBLIC WAY. UNDERGROUND UTILITIES WILL ALSO BE INCLUDED TO SERVICE THIS SITE.

PROJECT CONSULTANTS

OWNER
DRIVEN BRANDS
440 S. CHURCH STREET, STE 700
CHARLOTTE, NC 28202
CONTACT: ANTHONY KIGER
PHONE: [redacted]
EMAIL: [redacted]

PROJECT MANAGER
CONTACT: FAITH BURNETT
EMAIL: faith.burnett@drivenbrands.com

ARCHITECT
ALTAR GROUP, PLLC
10109 LOUETTA ROAD, SUITE 300
HOUSTON, TX 77070
CONTACT: JOHN D. LINTON, AIA
PHONE: [redacted]
EMAIL: [redacted]

CIVIL
ALTAR GROUP, PLLC
10109 LOUETTA ROAD, SUITE 300
HOUSTON, TX 77070
CONTACT: AUSTIN HAYNES
PHONE: [redacted]
EMAIL: [redacted]

CONSTRUCTION
CONTACT: GABRIEL THOMPSON
PHONE: [redacted]
EMAIL: [redacted]
*MAIN CONTACT FOR CONSTRUCTION

STRUCTURAL
GERRY WYNNE, PE
16107 KENSINGTON DRIVE, SUITE 278
SUGAR LAND, TX 77479
CONTACT: GERRY WYNNE
PHONE: [redacted]
EMAIL: [redacted]

MECHANICAL /PLUMBING
WATSON CONSULTING ENGINEERS
PO BOX 721206
HOUSTON, TX 77272
CONTACT: CHAU TANG
PHONE: [redacted]
EMAIL: [redacted]

ELECTRICAL
WATSON CONSULTING ENGINEERS
PO BOX 721206
HOUSTON, TX 77272
CONTACT: CHAU TANG
PHONE: [redacted]
EMAIL: [redacted]

JURISDICTION CONTACTS

BUILDING & SAFETY:
MARIO HERNANDEZ
8940 FOURWINDS DRIVE
SUITE #206 WINDCREST, TX 78239
PHONE: 210-213-1835

PLANNING
RACHEL DOMINGUEZ
8601 MIDCROWN
WINDCREST, TX 78239
PHONE: 210-655-0022

FIRE DEPARMENT:
IVAN HERNANDEZ
8601 MIDCROWN
WINDCREST, TX 78239
PHONE: 210-693-8197

VICINITY MAP

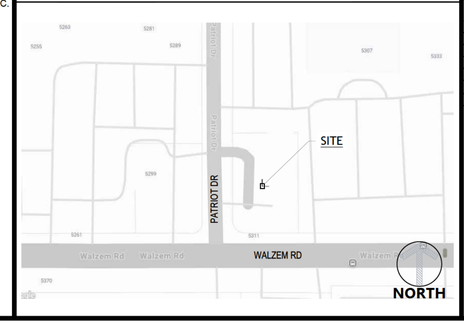

SHEET INDEX

SHEET	SHEET NAME	REVISION 1	REVISION 2	REVISION 3	REVISION 4	REVISION 5
	GENERAL					
A0.00	COVER SHEET	●				
	CIVIL					
C-001	COVER SHEET	●				
C-002	GENERAL CONSTRUCTION NOTES	●				
	ALTA SURVEY	●				
C-030	DEMOLITION PLAN	●				
C-100	SITE PLAN	●				
C-130	EROSION AND SEDIMENT CONTROL PLAN	●				
C-131	EROSION AND SEDIMENT CONTROL PLAN DETA LS	●				
C-200	PAV NG PLAN	●				
C-300	GRADING PLAN	●				
C-400	EXISTING & PROPOSED DRAINAGE PLAN	●				
C-500	UTILITY PLAN	●				
C-510	SITE PLAN DETAILS	●				
C-520	PAV NG PLAN DETAILS	●				
C-540	UTILITY DETAILS	●				
	LANDSCAPE					
LP-1	LANDSCAPE PLAN	●				
LP-2	PLANTING DETAILS AND SPECIFICATIONS	●				
LI-1	RRIGATION PLAN	●				
LI-2	RRIGATION DETAILS	●				
LI-3	RRIGATION SPECIFICATIONS	●				
	ARCHITECTURAL					
A0.01	GENERAL NOTES	●				
A0.10	AHSI A117.1 ACCESSIBILITY DETAILS	●				
A0.11	AHSI A117.1 ACCESSIBILITY DETAILS	●				
A0.12	AHSI A117.1 ACCESSIBILITY DETAILS	●				
A1.50	SITE STRUCTURES	●				
A2.10	FLOOR PLAN & ATTIC PLAN	●				
A2.20	EQU PMENT PLAN & SCHEDULE	●				
A2.30	REFLECTED CEIL NG PLAN	●				
A2.50	ROOF PLAN	●				
A3.00	EXTERIOR ELEVATIONS	●				
A4.00	BU LDING SECTIONS	●				
A4.10	WALL SECTIONS	●				
A4.11	WALL SECTIONS	●				
A5.00	ENLARGED PLANS & ELEVATIONS	●				
A6.00	DOOR, WINDOW & F NISH SCHEDULES	●				
A6.10	DOOR & WINDOW DETAILS	●				
A6.20a	OVERHEAD SECTIONAL DOOR SHOP DRAWINGS	●				
A6.20b	OVERHEAD SECTIONAL DOOR SHOP DRAWINGS	●				
A7.00	MISCELLANEOUS DETAILS	●				
	STRUCTURAL					
S010	GENERAL NOTES & SPEC FICATIONS	●				
S020	GENERAL NOTES & SPEC FICATIONS	●				
S101	FOUNDATION PLAN	●				
S201	ATTIC FRAMING PLAN	●				
S301	ROOF FRAM NG PLAN	●				
SD10	FOUNDATION DETAILS	●				
SD11	FOUNDATION DETAILS	●				
SD20	ROOF FRAM NG DETAILS	●				
	MECHANICAL & PLUMBING					
M-101	MECHANICAL PLAN	●				
M-201	MECHANICAL SPEC FICATION	●				
P-101	PLUMBING PLANS	●				
P-201	PLUMBING SCHEDULES	●				
P-301	PLUMBING DETA LS	●				
P-401	PLUMBING SPEC FICATION	●				
	ELECTRICAL					
E-101	ELECTRICAL SITE POWER & LIGHTING PLAN	●				
E-102	ELECTRICAL POWER & LIGHTING PLANS	●				
E-201	ONE LINE RISER DIAGRAM & PANEL SCHEDULES	●				
E-301	ELECTRICAL SPECS	●				
E-302	ELECTRICAL SPECS	●				
E-401	ELECTRICAL DETAILS	●				

ALTAR GROUP
ARCHITECTURE
ENGINEERING

SEAL:

REGISTERED ARCHITECT
JOHND LINTON
21410
STATE OF TEXAS
02/21/25

CONSULTANT:

TAKE 5 OIL CHANGE
PROTOTYPE: 3 BAY
5331 WALZEM ROAD
SAN ANTONIO, TX 78218

REV	DATE	DESCRIPTION
1	11/26/24	ISSUE FOR PERMIT
2	02/21/25	RE-ISSUE FOR PERMIT

DRAWN BY: RM
CHECKED BY: RR
ARCH. PROJECT NO.: DB24-023
SHEET NAME: COVER SHEET
SHEET NUMBER: A0.00

PERMIT DOCUMENTS

FOR

TAKE 5 OIL CHANGE

5331 WALZEM ROAD

SAN ANTONIO, TX 78218

FEBRUARY 2025

OWNER:
DRIVEN BRANDS, INC.
440 S. CHURCH STREET, SUITE 600
CHARLOTTE, NC 28202
CONTACT: ASHLEY DALY
PHONE: [redacted]
E-MAIL: [redacted]

CONSTRUCTION MANAGER:
DRIVEN BRANDS, INC.
440 S. CHURCH STREET, SUITE 600
CHARLOTTE, NC 28202
CONTACT: GABRIEL THOMPSON
PHONE: [redacted]
EMAIL: [redacted]

ARCHITECT:
ALTAR GROUP, PLLC
10109 LOUETTA RD SUITE 103
HOUSTON, TX 77070
CONTACT: JOHN LINTON, A.I.A.
PHONE: [redacted]
E-MAIL: [redacted]

CIVIL ENGINEER:
ALTAR GROUP, PLLC
10109 LOUETTA RD SUITE 103
HOUSTON, TX 77070
CONTACT: SANDRA NADIRA, P.E.
PHONE: [redacted]
E-MAIL: [redacted]

SURVEYOR:
WESTWOOD PROFESSIONAL SERVICES, INC.
211 NORTH LOOP 1604 EAST, SUITE 205
SAN ANTONIO, TX 78232
CONTACT: ETHAN C. OELKE, R.P.L.S.
PHONE: [redacted]
E-MAIL: [redacted]

GEOTECHNICAL ENGINEER:
PROFESSIONAL SERVICE INDUSTRIES, INC
3 BURWOOD LANE
SAN ANTONIO, TEXAS 78216
CONTACT: PHILIP L. JOHNSON, P.E.
PHONE: [redacted]
REPORT #: 0312-3316

VICINITY MAP
SCALE: 1" = 2000'

LOCATION MAP
SCALE: 1" = 200'

Sheet Number	Sheet Title
C-001	COVER SHEET
C-002	GENERAL CONSTRUCTION NOTES
	ALTA SURVEY
C-030	DEMOLITION PLAN
C-100	SITE PLAN
C-130	EROSION AND SEDIMENT CONTROL PLAN
C-131	EROSION AND SEDIMENT CONTROL PLAN DETAILS
C-200	PAVING PLAN
C-300	GRADING PLAN
C-401	EXISTING & PROPOSED DRAINAGE PLAN
C-500	UTILITY PLAN
C-510	SITE PLAN DETAILS
C-520	PAVING DETAILS
C-540	UTILITY DETAILS
LP-1	LANDSCAPE PLAN
LP-2	PLANTING SPECIFICATIONS AND DETAILS
LI-1	IRRIGATION PLAN
LI-2	IRRIGATION DETAILS
LI-3	IRRIGATION SPECIFICATIONS

FLOOD PLAIN STATEMENT:

ACCORDING TO MAP NO. 48029C0270G OF THE FEDERAL EMERGENCY MANAGEMENT AGENCY'S FLOOD INSURANCE RATE MAPS FOR BEXAR COUNTY, TEXAS AND INCORPORATED AREAS, DATED SEPTEMBER 29, 2010. THE SUBJECT TRACT IS SITUATED WITHIN UNSHADED ZONE X (AREA OF MINIMAL FLOOD HAZARD).

ALTAR GROUP PROJECT: DB24-023

STATE OF TEXAS
SANDRA M. NADIRA
137447
LICENSED
PROFESSIONAL ENGINEER
FIRM# 20340
02/21/2025

ALTAR GROUP
ARCHITECTURE
ENGINEERING

10109 LOUETTA RD, SUITE 103
HOUSTON, 77070

GENERAL CONSTRUCTION NOTES

1. **STANDARDS AND SPECIFICATIONS:** ALL MATERIALS, CONSTRUCTION METHODS, WORKMANSHIP, EQUIPMENT, SERVICES AND TESTING FOR ALL PUBLIC IMPROVEMENTS SHALL BE IN ACCORDANCE WITH THE GOVERNING AUTHORITIES' ORDINANCES, REGULATIONS, REQUIREMENTS, STATUTES, SPECIFICATIONS AND DETAILS, LATEST PRINTING AND AMENDMENTS THERETO. THE GOVERNING AUTHORITIES' PUBLIC WORKS AND WATER DEPARTMENT REQUIREMENTS, PLUMBING CODES, AND FIRE DEPARTMENT REGULATIONS SHALL TAKE PRECEDENT FOR ALL PRIVATE IMPROVEMENTS WHERE APPLICABLE. ALL OTHER PRIVATE CONSTRUCTION, NOT REGULATED BY THE GOVERNING AUTHORITY, SHALL BE IN ACCORDANCE WITH THE STANDARD SPECIFICATIONS FOR PUBLIC WORKS CONSTRUCTION, SAN ANTONIO TEXAS, LATEST PRINTING AND AMENDMENTS THERETO, EXCEPT AS MODIFIED OR AMENDED BY THE PROJECT CONTRACT DOCUMENTS.

2. **EXAMINATION OF SITE:** THE CONTRACTOR ACKNOWLEDGES THAT HE HAS INVESTIGATED AND SATISFIED HIMSELF AS TO THE CONDITIONS AFFECTING THE WORK, INCLUDING BUT NOT RESTRICTED TO THOSE BEARING UPON TRANSPORTATION, DISPOSAL, HANDLING AND STORAGE OF MATERIALS, AVAILABILITY OF LABOR, WATER, ELECTRIC POWER, ROADS AND UNCERTAINTIES OF WEATHER, OR SIMILAR PHYSICAL CONDITIONS AT THE SITE, CONDITIONS OF THE GROUND, THE CHARACTER OF EQUIPMENT AND FACILITIES NEEDED PRELIMINARY TO AND DURING PERFORMANCE OF THE WORK. THE CONTRACTOR ACKNOWLEDGES THAT HE HAS INSPECTED THE SITE OF THE WORK AND IS FAMILIAR WITH THE SOIL CONDITIONS TO BE ENCOUNTERED. ANY FAILURE BY THE CONTRACTOR TO ACQUAINT HIMSELF WITH THE AVAILABLE INFORMATION WILL NOT RELIEVE HIM FROM RESPONSIBILITY FOR ESTIMATING PROPERLY THE DIFFICULTY OR COST OF SUCCESSFULLY PERFORMING THE WORK. THE DEVELOPER ASSUMES NO RESPONSIBILITY FOR ANY CONCLUSIONS OR INTERPRETATIONS MADE BY THE CONTRACTOR ON THE BASIS OF THE INFORMATION MADE AVAILABLE BY THE DEVELOPER.

3. **SUBSURFACE INVESTIGATION:** SUBSURFACE EXPLORATION TO ASCERTAIN THE NATURE OF SOILS, INCLUDING THE AMOUNT OF ROCK, IF ANY, IS THE RESPONSIBILITY OF THE CONTRACTOR. IT SHALL BE THE RESPONSIBILITY OF THE CONTRACTOR TO MAKE SUCH SUBSURFACE INVESTIGATIONS AS HE DEEMS NECESSARY TO DETERMINE THE NATURE OF THE MATERIAL TO BE ENCOUNTERED. SOME SUBSURFACE EXPLORATION HAS BEEN PERFORMED BY THE GEOTECHNICAL ENGINEER OF RECORD ON THE PROJECT AND IS PROVIDED FOR INFORMATIONAL PURPOSES. THE DEVELOPER AND ENGINEER DISCLAIM ANY RESPONSIBILITY FOR THE ACCURACY, TRUE LOCATION AND EXTENT OF THE SOILS INFORMATION THAT HAS BEEN PREPARED BY OTHERS. THEY FURTHER DISCLAIM RESPONSIBILITY FOR INTERPRETATION OF THAT DATA BY THE CONTRACTOR, AS IN PROJECTING SOIL BEARING VALUES, ROCK PROFILES, SOILS STABILITY AND THE PRESENCE, LEVEL AND EXTENT OF UNDERGROUND WATER.

4. **TOPOGRAPHIC SURVEY:** TOPOGRAPHIC SURVEY INFORMATION SHOWN ON THE PLANS IS PROVIDED FOR INFORMATIONAL PURPOSES ONLY. THE CONTRACTOR SHALL BE RESPONSIBLE FOR VERIFYING THAT THE INFORMATION SHOWN IS CORRECT AND SHALL NOTIFY THE ENGINEER IMMEDIATELY OF ANY ERRORS, DISCREPANCIES OR OMISSIONS TO THE SURVEY INFORMATION PROVIDED. ANY COSTS INCURRED AS THE RESULT OF NOT CONFIRMING THE ACTUAL SURVEY SHALL BE BORNE BY THE CONTRACTOR.

5. **COMPLIANCE WITH LAWS:** THE CONTRACTOR SHALL FULLY COMPLY WITH ALL LOCAL, STATE AND FEDERAL LAWS, INCLUDING ALL CODES, ORDINANCES AND REGULATIONS APPLICABLE TO THIS CONTRACT AND THE WORK TO BE DONE THEREUNDER, WHICH EXIST OR MAY BE ENACTED LATER BY GOVERNMENTAL BODIES HAVING JURISDICTION OR AUTHORITY FOR SUCH ENACTMENT. ALL WORK REQUIRED UNDER THIS CONTRACT SHALL COMPLY WITH ALL REQUIREMENTS OF LAW, REGULATION, PERMIT OR LICENSE. IF THE CONTRACTOR FINDS THAT THERE IS A VARIANCE, HE SHALL IMMEDIATELY REPORT THIS TO THE DEVELOPER FOR RESOLUTION.

6. **PUBLIC CONVENIENCE AND SAFETY:** IN ACCORDANCE WITH GENERALLY ACCEPTED CONSTRUCTION PRACTICES, THE CONTRACTOR SHALL BE SOLELY AND COMPLETELY RESPONSIBLE FOR CONDITIONS OF THE JOB SITE, INCLUDING SAFETY OF ALL PERSONS AND PROPERTY DURING PERFORMANCE OF THE WORK. THIS REQUIREMENT SHALL APPLY CONTINUOUSLY AND NOT BE LIMITED TO NORMAL WORKING HOURS.

   MATERIALS STORED ON THE WORK SITE SHALL BE SO PLACED, AND THE WORK SHALL AT ALL TIMES BE SO CONDUCTED, AS TO CAUSE NO GREATER OBSTRUCTION TO THE TRAVELING PUBLIC THAN IS CONSIDERED ACCEPTABLE BY THE GOVERNING AUTHORITIES AND THE DEVELOPER. THE MATERIALS EXCAVATED SHALL BE PLACED SO AS NOT TO ENDANGER THE WORK OR PREVENT FREE ACCESS TO ALL FIRE HYDRANTS, WATER VALVES, GAS VALVES, MANHOLES, AND FIRE ALARM OR POLICE CALL BOXES IN THE VICINITY.

   THE DEVELOPER RESERVES THE RIGHT TO REMEDY ANY NEGLECT ON THE PART OF THE CONTRACTOR WITH REGARDS TO THE PUBLIC CONVENIENCE AND SAFETY WHICH MAY COME TO THE DEVELOPER'S ATTENTION, AFTER 24 HOURS NOTICE IN WRITING TO THE CONTRACTOR, SAVE IN CASES OF EMERGENCY, WHEN THE DEVELOPER SHALL HAVE THE RIGHT TO REMEDY ANY NEGLECT WITHOUT NOTICE; AND, IN EITHER CASE, THE COST OF SUCH WORK DONE BY THE DEVELOPER SHALL BE DEDUCTED FROM THE MONIES DUE OR TO BECOME DUE TO THE CONTRACTOR. THE CONTRACTOR SHALL NOTIFY THE DEVELOPER AND THE GOVERNING AUTHORITIES WHEN ANY STREET IS TO BE CLOSED OR OBSTRUCTED. THE CONTRACTOR SHALL KEEP ANY STREET OR STREETS IN CONDITION FOR UNOBSTRUCTED USE BY EMERGENCY SERVICES. WHERE THE CONTRACTOR IS REQUIRED TO CONSTRUCT TEMPORARY BRIDGES OR TO MAKE OTHER ARRANGEMENTS FOR CROSSING OVER DITCHES OR STREAMS, HIS RESPONSIBILITY FOR ACCIDENTS SHALL INCLUDE THE ROADWAY APPROACHES AS WELL AS THE STRUCTURES OF SUCH CROSSINGS.

7. **STORM WATER POLLUTION PREVENTION PLAN (SWP3):** THE CONTRACTOR SHALL COMPLY WITH THE CONDITIONS OF THE SWP3 WHILE CONDUCTING HIS ACTIVITIES ON THE PROJECT. IN ADDITION TO CONSTRUCTING THOSE ITEMS INDICATED ON THE PLAN SHEETS, COMPLIANCE WITH THE SWP3 INCLUDES CONFORMANCE TO CERTAIN PRACTICES AND PROCEDURES (IDENTIFIED IN THE SWP3) DURING PROJECT CONSTRUCTION.

8. **PERMITS AND LICENSES:** THE CONTRACTOR SHALL SECURE AND PAY FOR ALL PERMITS AND LICENSES NECESSARY FOR THE EXECUTION OF THE WORK AND SHALL FULLY COMPLY WITH ALL THEIR TERMS AND CONDITIONS. WHENEVER THE WORK UNDER THIS CONTRACT REQUIRES THE OBTAINING OF PERMITS FROM THE GOVERNING AUTHORITIES, THE CONTRACTOR SHALL FURNISH DUPLICATE COPIES OF SUCH PERMITS TO THE DEVELOPER BEFORE THE WORK COVERED THEREBY IS STARTED. NO WORK WILL BE ALLOWED TO PROCEED BEFORE SUCH PERMITS ARE OBTAINED.

9. **IMPACT FEES:** THE DEVELOPER WILL PAY ALL IMPACT FEES APPLICABLE TO THE PROJECT.

10. **BONDS:** PERFORMANCE, PAYMENT AND MAINTENANCE BONDS WILL BE REQUIRED FROM THE CONTRACTOR FOR ALL WORK CONSIDERED TO BE "PUBLIC" IMPROVEMENTS. BONDS SHALL BE IN THE FORM AND IN THE AMOUNTS AS REQUIRED BY THE GOVERNING AUTHORITIES.

11. **VENDOR'S CERTIFICATION:** ALL MATERIALS USED IN CONSTRUCTION SHALL HAVE A VENDOR'S CERTIFIED TEST REPORT. TEST REPORTS SHALL BE DELIVERED TO THE ENGINEER BEFORE PERMISSION WILL BE GRANTED FOR USE OF THE MATERIAL. ALL VENDOR'S TEST REPORTS SHALL BE SUBJECT TO REVIEW BY THE ENGINEER AND SHALL BE SUBJECT TO VERIFICATION BY TESTING FROM SAMPLES OF MATERIALS AS RECEIVED FOR USE ON THE PROJECT. IN THE EVENT ADDITIONAL TESTS ARE REQUIRED, THEY SHALL BE PERFORMED BY AN APPROVED INDEPENDENT TESTING LABORATORY AND SHALL BE PAID FOR BY THE CONTRACTOR.

12. **TESTING:** THE TESTING AND CONTROL OF ALL MATERIALS USED IN THE WORK SHALL BE DONE BY AN INDEPENDENT TESTING LABORATORY, EMPLOYED AND PAID DIRECTLY BY THE DEVELOPER. IN THE EVENT THE RESULTS OF INITIAL TESTING DO NOT COMPLY WITH THE PLANS AND SPECIFICATIONS, SUBSEQUENT TESTS NECESSARY TO DETERMINE THE ACCEPTABILITY OF MATERIALS OR CONSTRUCTION SHALL BE FURNISHED AND PAID BY THE CONTRACTOR AS DIRECTED BY THE DEVELOPER. PAYMENT WILL BE MADE BY DEDUCTION FROM PAYMENT DUE THE CONTRACTOR.

13. **INSPECTION:** INSPECTION OF THE PROPOSED CONSTRUCTION WILL BE PROVIDED BY THE GOVERNING AUTHORITIES AND/OR THE DEVELOPER. COSTS FOR INSPECTION SERVICES WILL BE PAID BY THE DEVELOPER. THE CONTRACTOR SHALL PROVIDE ASSISTANCE BY PROVIDING EXCAVATION, TRENCH SAFETY, OR OTHER WORK NECESSARY TO FACILITATE INSPECTION ACTIVITIES, AND SHALL GIVE SUFFICIENT NOTICE WELL IN ADVANCE OF PENDING CONSTRUCTION ACTIVITIES TO THE GOVERNING AUTHORITIES AND/OR DEVELOPER FOR SCHEDULING OF INSPECTION SERVICES. THE CONTRACTOR SHALL BE RESPONSIBLE FOR THE DETERMINATION OF ANY REQUIRED INSPECTIONS, THE SCHEDULING, CONTROL OF INSPECTIONS AND THE ACCEPTANCE OF ALL PUBLIC AND/OR PRIVATE UTILITIES BY THE APPROPRIATE GOVERNING AUTHORITY PRIOR TO TRENCH BACKFILLING.

14. **SHOP DRAWINGS:** THE CONTRACTOR SHALL PROVIDE, REVIEW, APPROVE AND SUBMIT ALL SHOP DRAWINGS, PRODUCT DATA AND SAMPLES REQUIRED BY THE GOVERNING AUTHORITIES AND THE PROJECT CONTRACT DOCUMENTS IN ACCORDANCE WITH ITEM 1.28 OF THE STANDARD SPECIFICATIONS FOR PUBLIC WORKS CONSTRUCTION, SAN ANTONIO TEXAS .

15. **SURVEYING:** ALL SURVEYING REQUIRED FOR CONSTRUCTION STAKING SHALL BE THE RESPONSIBILITY OF THE CONTRACTOR. THE DEVELOPER SHALL PROVIDE THE PROPERTY CORNERS AND TWO BENCHMARKS FOR USE AS HORIZONTAL AND VERTICAL DATUM. THE CONTRACTOR SHALL EMPLOY A REGISTERED PROFESSIONAL LAND SURVEYOR TO PERFORM ALL ADDITIONAL SURVEY, LAYOUT AND MEASUREMENT WORK NECESSARY FOR THE COMPLETION OF THE PROJECT.

16. **PROTECTION OF PROPERTY CORNERS AND BENCHMARKS:** THE CONTRACTOR SHALL PROTECT ALL PROPERTY CORNER MARKERS AND BENCHMARKS, AND WHEN ANY SUCH MARKERS OR MONUMENTS ARE IN DANGER OF BEING DISTURBED, THEY SHALL BE PROPERLY REFERENCED AND IF DISTURBED SHALL BE RESET BY A REGISTERED PUBLIC SURVEYOR AT THE EXPENSE OF THE CONTRACTOR.

17. **EXISTING STRUCTURES:** THE PLANS SHOW THE LOCATION OF ALL KNOWN SURFACE AND SUBSURFACE STRUCTURES; HOWEVER, THE DEVELOPER AND ENGINEER ASSUME NO RESPONSIBILITY FOR FAILURE TO SHOW ANY OR ALL OF THESE STRUCTURES ON THE PLANS, OR TO SHOW THEM IN THEIR EXACT LOCATION. SUCH FAILURE SHALL NOT BE CONSIDERED SUFFICIENT BASIS FOR CLAIMS FOR ADDITIONAL COMPENSATION FOR EXTRA WORK OR FOR INCREASING THE PAY QUANTITIES IN ANY MANNER WHATSOEVER, UNLESS THE OBSTRUCTION ENCOUNTERED IS SUCH AS TO REQUIRE CHANGES IN THE LINES OR GRADES, OR REQUIRE THE CONSTRUCTION OF SPECIAL WORK, FOR WHICH PROVISIONS ARE NOT MADE IN THE PLANS.

18. **PROTECTION OF EXISTING UTILITIES:** AS REQUIRED BY "THE TEXAS UNDERGROUND FACILITY DAMAGE PREVENTION AND SAFETY ACT", TEXAS ONE CALL SYSTEM MUST BE CONTACTED (800-344-8377) AT LEAST 48 HOURS PRIOR TO ANY EXCAVATION OPERATIONS BEING PERFORMED. IT IS THE CONTRACTOR'S RESPONSIBILITY TO CONTACT TEXAS ONE CALL SYSTEM.
   THE LOCATION AND DIMENSIONS SHOWN ON THE PLANS RELATIVE TO EXISTING UTILITIES ARE BASED ON THE BEST RECORDS AND/OR FIELD INFORMATION AVAILABLE AND ARE NOT GUARANTEED BY THE DEVELOPER OR ENGINEER TO BE ACCURATE AS TO LOCATION AND DEPTH. IT SHALL BE THE CONTRACTOR'S RESPONSIBILITY TO VERIFY LOCATIONS OF ADJACENT AND/OR CONFLICTING UTILITIES SUFFICIENTLY IN ADVANCE OF HIS ACTIVITIES IN ORDER THAT HE MAY NEGOTIATE SUCH LOCAL ADJUSTMENTS AS NECESSARY IN THE CONSTRUCTION PROCESS TO PROVIDE ADEQUATE CLEARANCES.
   THE CONTRACTOR SHALL TAKE ALL NECESSARY PRECAUTIONS IN ORDER TO PROTECT ALL EXISTING UTILITIES, SERVICES AND STRUCTURES ENCOUNTERED, WHETHER OR NOT THEY ARE INDICATED ON THE PLANS. ANY DAMAGE TO UTILITIES RESULTING FROM THE CONTRACTOR'S OPERATIONS SHALL BE RESTORED AT HIS EXPENSE. TO AVOID UNNECESSARY INTERFERENCE'S OR DELAYS, THE CONTRACTOR SHALL COORDINATE ALL UTILITY REMOVALS, REPLACEMENTS AND CONSTRUCTION WITH THE APPROPRIATE GOVERNING AUTHORITIES, THEN REQUEST WRITTEN AUTHORIZATION FROM THE ENGINEER. THE DEVELOPER WILL NOT BE LIABLE FOR DAMAGES DUE TO DELAY AS A RESULT OF THE ABOVE.

19. **DAMAGE TO EXISTING FACILITIES:** ALL UTILITIES, PAVEMENT, SIDEWALKS, WALLS, FENCES, ETC. NOT DESIGNATED TO BE REMOVED BUT THAT ARE DAMAGED DURING CONSTRUCTION ACTIVITIES SHALL BE REPLACED TO A CONDITION AS GOOD AS OR BETTER THAN THE CONDITIONS PRIOR TO STARTING THE WORK, SOLELY AT THE EXPENSE OF THE CONTRACTOR.

20. **FIRE AND LIFE SAFETY SYSTEMS:** CONTRACTOR SHALL NOT REMOVE, DISABLE OR DISRUPT EXISTING FIRE OR LIFE SAFETY SYSTEMS WITHOUT WRITTEN PERMISSION FROM THE GOVERNING AUTHORITY.

21. **TRENCH SAFETY:** IT SHALL BE THE RESPONSIBILITY OF THE CONTRACTOR TO PROVIDE AND MAINTAIN A VIABLE TRENCH SAFETY SYSTEM AT ALL TIMES DURING CONSTRUCTION ACTIVITIES. THE CONTRACTOR IS DIRECTED TO BECOME KNOWLEDGEABLE AND FAMILIAR WITH THE STANDARDS AS SET BY THE OCCUPATIONAL SAFETY AND HEALTH ADMINISTRATION (OSHA) AND THE STATE OF TEXAS LAW CONCERNING TRENCHING AND SHORING. THE CONTRACTOR SHALL PROVIDE TRENCH SAFETY SYSTEM PLANS, PREPARED AND SEALED BY A PROFESSIONAL ENGINEER LICENSED IN THE STATE OF TEXAS, FOR THE IMPLEMENTATION OF SAFETY CONTROL MEASURES MEETING THE REQUIREMENTS OF THE GOVERNING AUTHORITIES THAT WILL BE IN EFFECT DURING THE PERIOD OF CONSTRUCTION OF THE PROJECT.

22. **SAFETY RESTRICTIONS - WORK NEAR HIGH VOLTAGE LINES:** THE FOLLOWING PROCEDURES WILL BE FOLLOWED REGARDING THE SUBJECT ITEM ON THIS CONTRACT:

    A. A WARNING SIGN NOT LESS THAN FIVE INCHES BY SEVEN INCHES PAINTED YELLOW WITH BLACK LETTERS THAT ARE LEGIBLE AT 12 FEET SHALL BE PLACED INSIDE AND OUTSIDE VEHICLES SUCH AS CRANES, DERRICKS, POWER SHOVELS, DRILLING RIGS, PILE DRIVER, HOISTING EQUIPMENT OR SIMILAR APPARATUS. THE WARNING SIGN SHALL READ AS FOLLOWS: "WARNING - UNLAWFUL TO OPERATE THIS EQUIPMENT WITHIN SIX FEET OF HIGH VOLTAGE LINES".

    B. EQUIPMENT THAT MAY BE OPERATED WITHIN TEN FEET OF HIGH VOLTAGE LINES SHALL HAVE AN INSULATING CAGE-TYPE OF GUARD ABOUT THE BOOM OR ARM, EXCEPT BACKHOES OR DIPPERS, AND INSULATOR LINKS ON THE LIFT HOOK CONNECTIONS.

    C. WHEN NECESSARY TO WORK WITHIN SIX FEET OF HIGH VOLTAGE ELECTRIC LINES, NOTIFY THE POWER COMPANY WHO WILL ERECT TEMPORARY MECHANICAL BARRIERS, DE-ENERGIZE THE LINE OR RAISE OR LOWER THE LINE. THE WORK DONE BY THE POWER COMPANY SHALL BE AT THE EXPENSE OF THE CONTRACTOR. THE NOTIFYING DEPARTMENT SHALL MAINTAIN AN ACCURATE LOG OF ALL SUCH CALLS TO THE POWER COMPANY AND SHALL RECORD ACTION TAKEN IN EACH CASE.

    D. THE CONTRACTOR IS REQUIRED TO MAKE ARRANGEMENTS WITH THE POWER COMPANY FOR THE TEMPORARY RELOCATION OR RAISING OF HIGH VOLTAGE LINES AT THE CONTRACTOR'S SOLE COST AND EXPENSE.

    E. NO PERSON SHALL WORK WITHIN SIX FEET OF A HIGH VOLTAGE LINE WITHOUT PROTECTION HAVING BEEN TAKEN AS OUTLINED IN PARAGRAPH C. ABOVE.

23. **TRAFFIC CONTROL:** IT SHALL BE THE RESPONSIBILITY OF THE CONTRACTOR TO DEVELOP AND SUBMIT FOR APPROVAL BY THE GOVERNING AUTHORITIES, A TRAFFIC CONTROL PLAN, PREPARED AND SEALED BY A PROFESSIONAL ENGINEER LICENSED IN THE STATE OF TEXAS, OUTLINING TRAFFIC MANAGEMENT PROCEDURES TO BE PROVIDED DURING CONSTRUCTION. TRAFFIC CONTROL MEASURES SHALL BE PROVIDED IN ACCORDANCE WITH THE FOLLOWING ADDITIONAL REQUIREMENTS.

    A. CONSTRUCTION OF SIGNING AND BARRICADES SHALL CONFORM WITH THE "2011 TEXAS MANUAL ON UNIFORM TRAFFIC CONTROL DEVICES", AS CURRENTLY AMENDED, TEXAS DEPARTMENT OF HIGHWAYS AND PUBLIC TRANSPORTATION.

    B. THE CONTRACTOR SHALL BE REQUIRED TO FURNISH BARRICADES, FLARES, FLAGMEN, ETC., FOR THE PROTECTION OF THE PUBLIC, EMPLOYEES AND THE WORK.

    C. THE CONTRACTOR SHALL PERFORM THEIR WORK IN SUCH A MANNER AS TO CREATE A MINIMUM OF INTERRUPTION TO TRAFFIC ALONG ADJACENT ROADWAYS. TWO WAY TRAFFIC MUST BE MAINTAINED ON ALL ROADWAYS AT ALL TIMES THROUGHOUT CONSTRUCTION UNLESS WRITTEN PERMISSION IS GRANTED BY THE GOVERNING AUTHORITIES.

    D. ALL SIGNAGE, MARKINGS, LIGHTING, BARRICADES, FLAGMEN AND OTHER DEVICES AND PERSONNEL REQUIRED FOR TRAFFIC CONTROL DURING CONSTRUCTION OF THE PROJECT WILL BE INCLUDED IN THE CONTRACT AMOUNT.

    E. ALL TRAFFIC CONTROL DEVICES USED DURING NIGHTTIME SHALL BE REFLECTORIZED, ILLUMINATED FROM WITHIN OR EXTERNALLY ILLUMINATED.

    F. THE CONTRACTOR SHALL NOT REMOVE ANY REGULATORY SIGN, INSTRUCTIONAL SIGN, WARNING SIGN, STREET NAME SIGN OR ANY SIGNAL WHICH CURRENTLY EXISTS WITHOUT THE CONSENT OF THE GOVERNING AUTHORITIES.

    G. THE CONTRACTOR SHALL MAINTAIN AND REPLACE, WHERE NECESSARY, ALL SIGNS, LIGHTS, MARKINGS AND TEMPORARY PAVEMENT THROUGHOUT THE CONSTRUCTION PERIOD.

    H. THE CONTRACTOR SHALL REMOVE ALL TRAFFIC CONTROL MEASURES AT THE END OF CONSTRUCTION AND RESTORE UNIMPROVED PAVEMENT AND OTHER DISTURBED AREAS TO THEIR ORIGINAL CONDITION.

24. **ACCESS TO ADJACENT PROPERTIES:** ACCESS TO ADJACENT PROPERTIES SHALL BE MAINTAINED AT ALL TIMES UNLESS OTHERWISE DIRECTED BY THE GOVERNING AUTHORITIES AND/OR DEVELOPER.

25. **ACCESS ROUTES, STAGING AREAS AND STORAGE AREAS:** ALL PRIVATE HAUL ROADS, ACCESS ROUTES, STAGING AND STORAGE AREAS SHALL BE SUBJECT TO THE APPROVAL OF THE DEVELOPER. THE CONTRACTOR SHALL BE RESPONSIBLE FOR MAINTAINING AND REPAIRING ALL ROADS AND OTHER FACILITIES USED DURING CONSTRUCTION. UPON COMPLETION OF THE PROJECT, ALL HAUL ROADS, ACCESS ROADS, STAGING AND STORAGE AREAS SHALL BE RESTORED TO A CONDITION EQUAL TO OR BETTER THAN THAT AT THE TIME THE CONTRACTOR COMMENCED WORK ON THE PROJECT.

26. **PARKING OF CONSTRUCTION EQUIPMENT:** AT NIGHT AND DURING ALL OTHER PERIODS OF TIME WHEN EQUIPMENT IS NOT BEING ACTIVELY USED FOR THE CONSTRUCTION WORK, THE CONTRACTOR SHALL PARK THE EQUIPMENT AT LOCATIONS APPROVED BY THE DEVELOPER. DURING THE CONSTRUCTION OF THE PROJECT, THE CONTRACTOR SHALL COMPLY WITH THE PRESENT ZONING REQUIREMENTS OF THE GOVERNING AUTHORITIES IN THE USE OF VACANT PROPERTY FOR STORAGE PURPOSES. THE CONTRACTOR SHALL ALSO PROVIDE ADEQUATE BARRICADES, MARKERS AND LIGHTS TO PROTECT THE DEVELOPER, THE GOVERNING AUTHORITIES, THE PUBLIC. ALL BARRICADES, LIGHTS, AND MARKERS MUST MEET THE REQUIREMENTS OF THE GOVERNING AUTHORITIES' REGULATIONS.

27. **WATER FOR CONSTRUCTION:** THE CONTRACTOR SHALL MAKE THE NECESSARY ARRANGEMENTS FOR PURCHASING WATER FROM THE GOVERNING AUTHORITY FOR HIS USE ON THE PROJECT SITE. COSTS ASSOCIATED WITH THIS SERVICE SHALL BE INCLUDED IN THE CONTRACT AMOUNT.

28. **TEMPORARY ELECTRIC AND COMMUNICATIONS FOR CONSTRUCTION:** THE CONTRACTOR SHALL MAKE THE NECESSARY ARRANGEMENTS FOR INSTALLATION AND PURCHASING OF TEMPORARY ELECTRIC AND COMMUNICATIONS SERVICES FROM THE GOVERNING AUTHORITIES FOR HIS USE ON THE PROJECT SITE. COSTS ASSOCIATED WITH THESE SERVICES SHALL BE INCLUDED IN THE CONTRACT AMOUNT.

29. **FENCES:** ALL FENCES ENCOUNTERED AND REMOVED DURING CONSTRUCTION, EXCEPT THOSE DESIGNATED TO BE REMOVED OR RELOCATED, SHALL BE RESTORED TO THE ORIGINAL OR BETTER THAN CONDITION UPON COMPLETION OF THE PROJECT. WHERE WIRE FENCING, EITHER WIRE MESH OR BARBED WIRE, IS TO BE CROSSED, THE CONTRACTOR SHALL SET CROSS-BRACED POSTS ON EITHER SIDE OF THE CROSSING. TEMPORARY FENCING SHALL BE ERECTED IN PLACE OF THE FENCING REMOVED WHENEVER THE WORK IS NOT IN PROGRESS, AND WHEN THE SITE IS VACATED OVERNIGHT AND/OR AT ALL TIMES TO PREVENT PERSONS AND/OR LIVESTOCK FROM ENTERING THE CONSTRUCTION AREA. THE COST OF FENCE REMOVAL, TEMPORARY CLOSURES AND REPLACEMENT SHALL BE INCLUDED IN THE CONTRACT.

30. **DRAINAGE CHANNELS:** WHERE EXISTING DRAINAGE CHANNELS ARE TEMPORARILY DISTURBED OR BLOCKED DURING CONSTRUCTION, IT SHALL BE RESTORED TO THE ORIGINAL CONDITION, GRADE AND CROSS SECTION AFTER CONSTRUCTION IS COMPLETED.

31. **COORDINATION WITH OTHERS:** IN THE EVENT THAT OTHER CONTRACTORS ARE DOING WORK IN THE SAME AREA SIMULTANEOUSLY WITH THE PROJECT, THE CONTRACTOR SHALL COORDINATE HIS PROPOSED CONSTRUCTION WITH THAT OF THE OTHER CONTRACTORS.

32. **CONDITION OF SITE DURING CONSTRUCTION:** DURING CONSTRUCTION OF THE WORK, THE CONTRACTOR SHALL, AT ALL TIMES, KEEP THE SITE OF THE WORK AND ADJACENT PREMISES AS FREE FROM MATERIAL, DEBRIS AND RUBBISH AS IS PRACTICABLE AND SHALL REMOVE SAME FROM ANY PORTION OF THE SITE IF, IN THE OPINION OF THE DEVELOPER, SUCH MATERIAL, DEBRIS OR RUBBISH CONSTITUTES A NUISANCE OR IS OBJECTIONABLE. IN CASE OF FAILURE ON THE PART OF THE CONTRACTOR UNDER HIS CONTRACT, OR WHERE SUFFICIENT CONTRACT FUNDS ARE UNAVAILABLE FOR THIS PURPOSE, THE CONTRACTOR OR HIS SURETY SHALL REIMBURSE THE DEVELOPER FOR ALL SUCH COSTS.

33. **EXISTING ROADWAYS:** THE CONTRACTOR SHALL BE RESPONSIBLE FOR MAINTAINING THE CLEANLINESS OF EXISTING PAVED ROADS. ALL COSTS ASSOCIATED WITH MAINTAINING THE CLEANLINESS OF EXISTING ROADS SHALL BE INCLUDED IN THE CONTRACT AMOUNT.

34. **DUST CONTROL:** THE CONTRACTOR SHALL TAKE ALL PRECAUTIONS NECESSARY TO CONTROL DUST ON THE PROJECT SITE BY SPRINKLING OF WATER, OR ANY OTHER METHODS APPROVED BY THE GOVERNING AUTHORITIES, AND SHALL PROVIDE ALL EQUIPMENT AND PERSONNEL REQUIRED TO PREVENT DUST FROM BECOMING A NUISANCE TO THE ADJACENT PROPERTIES.

35. **CLEAN-UP FOR FINAL ACCEPTANCE:** THE CONTRACTOR SHALL MAKE A FINAL CLEAN UP OF ALL PARTS OF THE WORK BEFORE ACCEPTANCE BY THE DEVELOPER. THIS CLEAN UP SHALL INCLUDE REMOVAL OF ALL OBJECTIONABLE MATERIALS AND, IN GENERAL, PREPARING THE SITE OF THE WORK IN AN ORDERLY MANNER OF APPEARANCE.

36. **REMOVAL OF DEFECTIVE AND UNAUTHORIZED WORK:** ALL WORK WHICH HAS BEEN REJECTED OR CONDEMNED SHALL BE REPAIRED, OR IF IT CANNOT BE REPAIRED SATISFACTORILY, IT SHALL BE REMOVED AND REPLACED AT THE CONTRACTOR'S EXPENSE. DEFECTIVE MATERIALS SHALL BE IMMEDIATELY REMOVED FROM THE WORK SITE. WORK DONE BEYOND THE LINE OR NOT IN CONFORMITY WITH THE GRADES SHOWN ON THE DRAWINGS OR AS PROVIDED, WORK DONE WITHOUT REQUIRED INSPECTION, OR ANY EXTRA OR UNCLASSIFIED WORK DONE WITHOUT WRITTEN AUTHORITY AND PRIOR AGREEMENT IN WRITING AS TO PRICES, SHALL BE AT THE CONTRACTOR'S RISK, AND WILL BE CONSIDERED UNAUTHORIZED, AND AT THE OPTION OF THE DEVELOPER MAY NOT BE MEASURED AND PAID FOR AND MAY BE ORDERED REMOVED AT THE CONTRACTOR'S EXPENSE. UPON FAILURE OF THE CONTRACTOR TO REPAIR SATISFACTORILY OR TO REMOVE AND REPLACE, IF SO DIRECTED, REJECTED, UNAUTHORIZED OR CONDEMNED WORK OR MATERIALS IMMEDIATELY AFTER RECEIVING NOTICE FROM THE DEVELOPER, THE DEVELOPER WILL, AFTER GIVING WRITTEN NOTICE TO THE CONTRACTOR, HAVE THE AUTHORITY TO CAUSE DEFECTIVE WORK TO BE REMEDIED OR REMOVED AND REPLACED, OR TO CAUSE UNAUTHORIZED WORK TO BE REMOVED AND TO DEDUCT THE COST THEREOF FROM ANY MONIES DUE OR TO BECOME DUE TO THE CONTRACTOR.

37. **DISPOSITION AND DISPOSAL OF EXCESS AND UNSUITABLE MATERIALS:** ALL MATERIALS TO BE REMOVED FROM THE SITE INCLUDING BUT NOT LIMITED TO EXCESS MATERIAL AND UNSUITABLE MATERIALS SUCH AS CONCRETE, ASPHALT, LARGE ROCKS, REFUSE, AND OTHER DEBRIS SHALL BECOME THE PROPERTY OF THE CONTRACTOR AND SHALL BE DISPOSED OF OUTSIDE THE LIMITS OF THE PROJECT AT THE CONTRACTOR'S EXPENSE. THE CONTRACTOR SHALL ALSO COMPLY WITH ALL APPLICABLE LAWS GOVERNING SPILLAGE OF DEBRIS WHILE TRANSPORTING TO A DISPOSAL SITE.

38. **SEEDING:** THE CONTRACTOR SHALL PROVIDE SEEDING, WATERING, FERTILIZING AND REQUIRED MAINTENANCE FOR THE GRASSING OF ALL UNPAVED AREAS OF DEDICATED RIGHT-OF-WAY, EASEMENTS, AND ALL OTHER DISTURBED AREAS OF CONSTRUCTION NOT COVERED BY THE LANDSCAPE PLAN FOR THE PROJECT. SEEDING SHALL ALSO BE PROVIDED IN CONFORMANCE WITH THE REQUIREMENTS OF THE PROJECT STORM WATER POLLUTION PREVENTION PLAN IN ORDER TO ESTABLISH A GRASS COVER ON DISTURBED AREAS SUBJECTED TO THE EROSION OF THE SOIL SURFACE.

39. **RECORD DRAWINGS:** THE CONTRACTOR SHALL MAINTAIN AN ACCURATE RECORD OF THE INSTALLATION OF ALL MATERIALS AND SYSTEMS COVERED BY THE PROJECT CONTRACT DOCUMENTS. THESE RECORD PRINTS WILL BE REVIEWED BY THE DEVELOPER EACH MONTH PRIOR TO THE PRELIMINARY REVIEW OF CONTRACTOR'S REQUEST FOR PAYMENT. IF THE DRAWINGS ARE NOT COMPLETE, ACCURATE AND UP-TO DATE, THE DEVELOPER WILL NOT ACCEPT THE PAYMENT REQUEST. THE COMPLETED SET OF "RECORD" DRAWINGS MUST BE DELIVERED TO THE DEVELOPER BEFORE REQUESTING FINAL PAYMENT.

ALTAR GROUP

ARCHITECTURE
ENGINEERING

EAL

STATE OF TEXAS
SANDRA M. NADIRA
137447
LICENSED
PROFESSIONAL ENGINEER
FIRM# 20340
02/21/2025

N ULTANT

DRIVEN BRAND

TAKE 5 OIL CHANGE

TAKE 5 OIL CHANGE
1 WALZEM ROAD
SAN ANTONIO, TX 78216

REV	DATE	DESCRIPTION
	11/27/24	ISSUE FOR SUP
	02/21/25	RE-ISSUE FOR SUP

DRAWN BY:
CHECKED BY:
PROJECT NO.: 4-
SHEET NAME: GENERAL CONSTRUCTION NOTES
SHEET NUMBER: C-002

© 2024 Westwood Professional Services, Inc.

VICINITY MAP

(NOT TO SCALE)

WINDCREST, TEXAS

SCH. B EXCEPTIONS

The following notes correspond to the numbering system of the above mentioned title commitment:

10. The following matters and all terms of the documents creating or offering evidence of the matters (We must insert matters or delete this exception.):

d. Building setback line, 60 feet wide, along Walzem Road, as shown on plat recorded in Volume 7000, Page 170, Deed and Plat Records, Bexar County, Texas. *AFFECTS, SHOWN HEREON*

e. Building setback line, 10 feet wide, along Patriot Drive, as shown on plat recorded in Volume 7000, Page 170, Deed and Plat Records, Bexar County, Texas. *AFFECTS, SHOWN HEREON*

f. Water easement, 10 feet wide, along Walzem Road, as shown on plat recorded in Volume 7000, Page 170, Deed and Plat Records, Bexar County, Texas. *AFFECTS, SHOWN HEREON*

TABLE A ITEMS

1. Monuments placed at all major corners of the boundary of the property.
2. The subject property is addressed 5331 Walzem Road, Windcrest, Texas 78218, and is Bexar County PID No. 343993.
3. The foregoing property is located within Zone X according to FEMA FIRM Panel No 48029C0270G, dated September 29, 2010. Zone X is not within a 100-year flood zone.
4. Subject tract area is 0.341 acres, or 14,866 square feet.
5. Vertical relief based on NAVD88. Benchmarks shown hereon.

6 (a). Current zoning classification: B-1 Neighborhood Business District,
Height regulations: no building or structure shall exceed two and one-half (2 1/2) stories or thirty-five (35) feet in height, Parking requirement for general business: one space for each 200 sq. ft of gross retail/sales service area and one space per 800 sq. ft. gross storage area, or one space per 400 sq. ft. of combined retail sales/service area with no dedicated warehouseing area. per the City of Windcrest, Texas Municipal code June 12, 2024.

6 (b). Building setback lines shown hereon per recorded plat and per City regulations.

7(a). Exterior dimensions of all buildings at ground level shown hereon.

7(b1). Square footage of exterior footprint of all building at ground level shown hereon.

7(c). Measured height of all building above grade shown hereon.

8. Substantial features observed in the process of conducting the survey are shown hereon.
9. 26 parking stalls found on site, 1 handicap accessible stalls and 25 regular stalls.
10. No party walls found on site.

11(a). Evidence of underground utilities existing on or serving the surveyed property as determined by Texas811 ticket No. 2472818038, placed on August 15, 2024. Utilities notified were At&t, CPS Energy, MCI, NX Utilities, and Spectrum.

11(b). Private Locates were provided by the client, completed by GPRS on 8/20/2024.

13. Names of adjoining owners of platted lands according to current public records are shown hereon.
14. The nearest intersecting street is Patriot Drive, as shown hereon.
16. No evidence of earth moving work and construction was found on site.
17. No proposed changes in street right-of-way lines or evidence of recent street or sidewalk construction was found in the process of conducting the survey.
18. All plottable offsite easements or servitudes disclosed in documents provided or obtained are shown hereon.
19. Professional Liability Insurance policy obtained by the surveyor in the minimum amount of $2,000,000 to be in effect throughout the contract term. Certificate of Insurance to be furnished upon request.

LEGAL DESCRIPTION

Per Title Commitment referenced hereon:

Lot 1, Block 98, Windcrest Unit 24, in the City of Windcrest, Bexar County, Texas, according to map or plat thereof recorded in Volume 7000, Page 170, Deed and Plat Records, Bexar County, Texas.

CERTIFICATION

To Take 5 Properties SPV, LLC; Driven Brands, Inc, a Delaware corporation; Boing US Holdco, Inc., a Delaware Corporation; and Chicago Title Insurance Company:

This is to certify that this map or plat and the survey on which it is based were made in accordance with the 2021 Minimum Standard Detail Requirements for ALTA/NSPS Land Title Surveys, jointly established and adopted by ALTA and NSPS, and includes items 1, 2, 3, 4, 5, 6(a)(b), 7(a)(b1)(c), 8, 9, 11(a), 11(b), 13, 14, 16, 17, 18 and 19 of Table A thereof. The field work was completed on 08/22/2024.

Ethan Oelke

Date: 09/12/2024

Ethan C. Oelke, R.P.L.S.
Texas License No. 6926
ethan.oelke@westwoodps.com

STATE OF TEXAS
REGISTERED
ETHAN C. OELKE
6926
PROFESSIONAL
LAND SURVEYOR

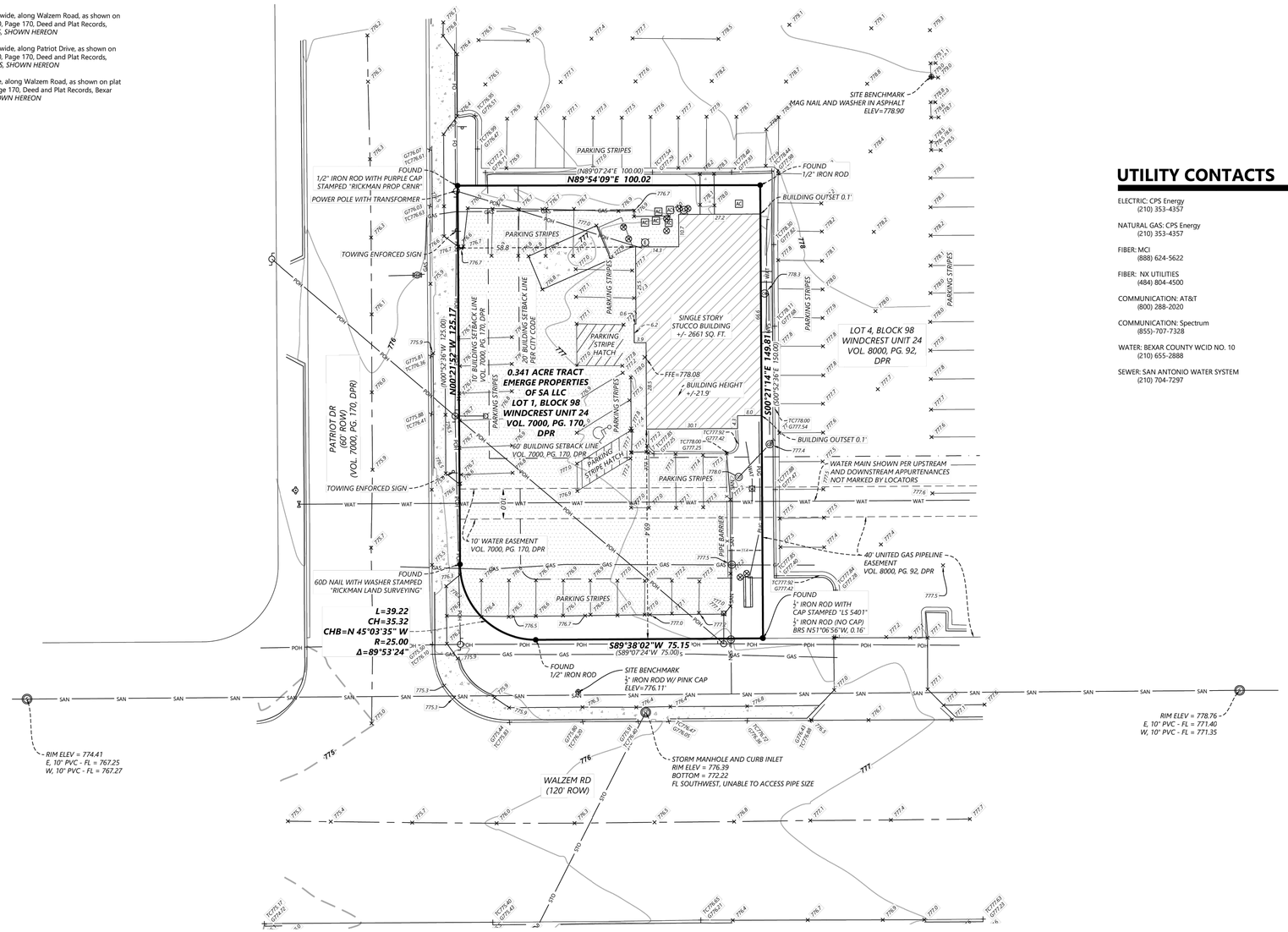

UTILITY CONTACTS

ELECTRIC: CPS Energy
(210) 353-4357

NATURAL GAS: CPS Energy
(210) 353-4357

FIBER: MCI
(888) 624-5622

FIBER: NX UTILITIES
(484) 804-4500

COMMUNICATION: AT&T
(800) 288-2020

COMMUNICATION: Spectrum
(855)-707-7328

WATER: BEXAR COUNTY WCID NO. 10
(210) 655-2888

SEWER: SAN ANTONIO WATER SYSTEM
(210) 704-7297

0' 20' 40' 60'

LEGEND

- SANITARY MANHOLE
- SEWER CLEANOUT
- STORM MANHOLE
- HYDRANT
- GATE VALVE
- WATER METER
- ELECTRIC METER
- POWER POLE
- POWER POLE WITH LIGHT
- NATURAL GAS METER
- NATURAL GAS VALVE
- AIR CONDITIONER
- STEEL BOLLARD
- SIGN (SEE LABEL)
- HANDICAPPED STALL
- BOUNDARY LINE
- EASEMENT LINE
- GAS — GAS LINE
- POH — POWER OVERHEAD
- PUG — POWER UNDERGROUND
- STO — STORM SEWER
- SAN — SANITARY SEWER
- WAT — WATERMAIN
- FO — FIBER OPTIC
- X — FENCE LINE
- MISC — UNKNOWN UNDERGROUND LINE
- CURB & GUTTER
- CONCRETE SURFACE
- ASPHALT SURFACE
- FOUND MONUMENT (SEE LABEL)
- OPR — BEXAR COUNTY OFFICIAL PUBLIC RECORDS
- DPR — BEXAR COUNTY DEED AND PLAT RECORDS
- TC — TOP OF CURB ELEVATION
- G — CURB GUTTER ELEVATION
- () — RECORD CALLS PER PLAT

GENERAL NOTES

1. Bearings are based on the North American Datum of 1983 (2011 Adjustment), Texas State Plane Coordinate System for the South Central Zone, 4204. Coordinates and distances shown hereon are surface utilizing a combined scale factor of 1.0001652258.
2. This survey was completed using Title Commitment GF No. SAT-41-4000412401010-DB, with effective date April 16, 2024, provided by Chicago Title Insurance Company.
3. The underground utilities shown have been located from field survey information and existing drawings. The surveyor makes no guarantees that the underground utilities shown comprise all such utilities in the area, either in service or abandoned. The surveyor further does not warrant that that the underground utilities shown are in the exact location indicated although the surveyor does certify that they are located as accurately as possible from information available. The surveyor has not physically located the underground utilities.
4. The accompanying survey was made on the ground and correctly shows the location of all buildings, structures and other improvements situated on the above premises; there are no visible encroachments on the subject property or upon adjacent land abutting said property except as shown hereon.

N:\0058338.00\06 CAD\DWG\SURVEY C3D\ALTA SURVEY\0058338.00V- ALTA.DWG

PROJECT NO.:	58338.00
CHECKED:	ECO
DRAWN:	WCH
FIELD CREW:	PJ
FIELD WORK DATE:	08/22/2024

INITIAL ISSUE:
REVISIONS:

PREPARED FOR:
Bureau Veritas
510 E. Memorial Road, Suite A-1
Oklahoma City, OK 73114

ALTA/NSPS LAND TITLE SURVEY

EXHIBIT OF:
A 0.341 ACRE TRACT SITUATED IN THE CITY OF WINDCREST, COUNTY BLOCK 5007, BEXAR COUNTY, TEXAS, BEING LOT 1, BLOCK 98, WINDCREST UNIT 24 SUBDIVISION, RECORDED IN VOLUME 7000, PAGE 170, DEED AND PLAT RECORDS, BEXAR COUNTY, TEXAS

Westwood
Phone (210) 265-8300 211 North Loop 1604 East, Suite 205
Toll Free (888) 937-5150 San Antonio, TX 78232
westwoodps.com
Westwood Professional Services, Inc.
TBPELS ENGINEERING FIRM REGISTRATION NO. 11756
TBPELS SURVEYING FIRM REGISTRATION NO. 10074301

SHEET NUMBER:
1 OF 1

DATE: 09/12/2024

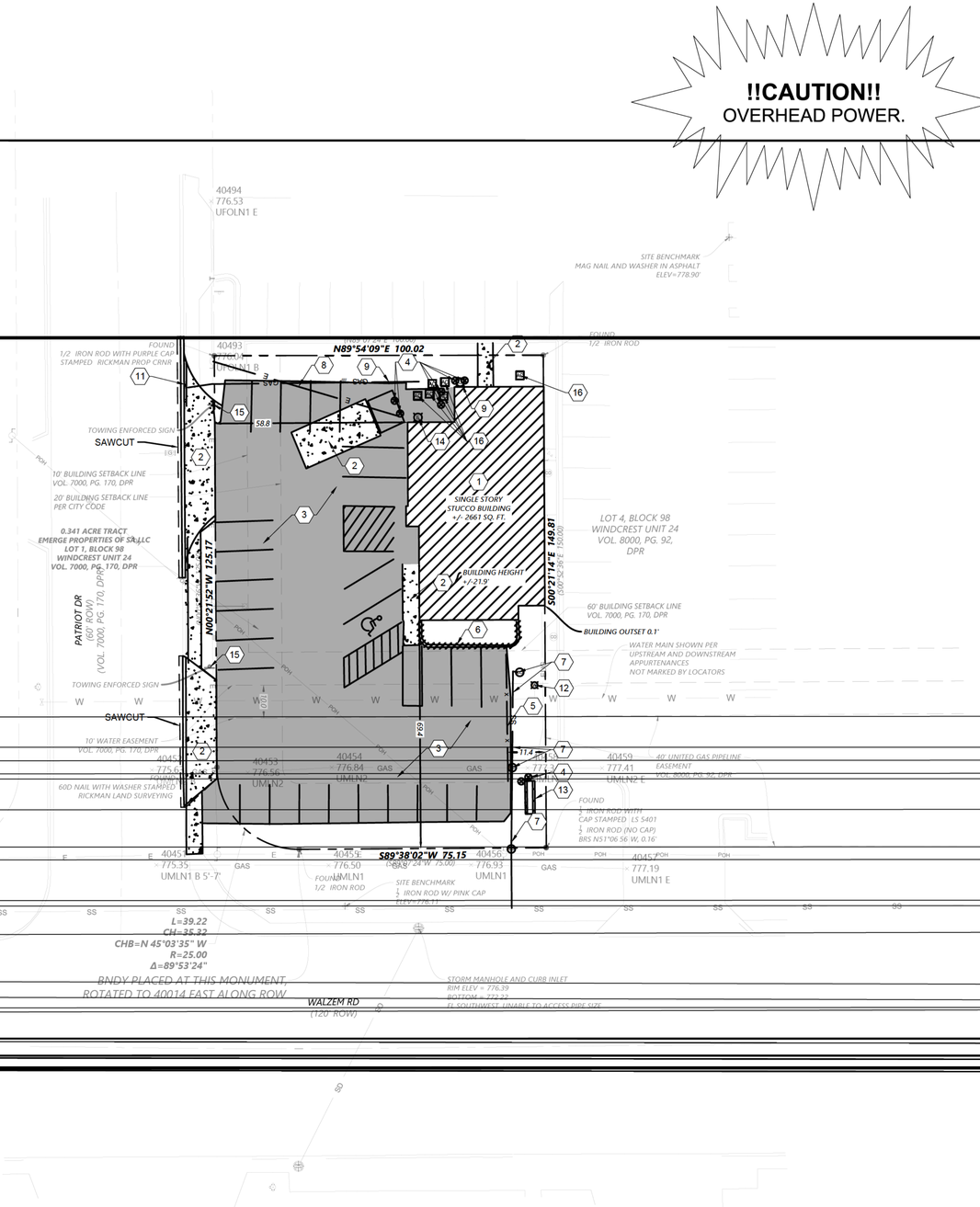

KEYNOTES

1. CONTRACTOR TO REMOVE AND DISPOSE OF EXISTING BUILDING/STRUCTURE.
2. CONTRACTOR TO REMOVE AND DISPOSE OF EXISTING CONCRETE PAVEMENT.
3. CONTRACTOR TO REMOVE AND DISPOSE OF EXISTING ASPHALT PAVEMENT.
4. CONTRACTOR TO REMOVE & DISPOSE OF EXIST NG BOLLARD.
5. CONTRACTOR TO REMOVE & DISPOSE OF EXIST NG FENCE.
6. CONTRACTOR TO REMOVE & DISPOSE OF EXIST NG CURB.
7. CONTRACTOR TO REMOVE & DISPOSE OF EXIST NG SEWERLINE AND CLEANOUTS.
8. CONTRACTOR TO REMOVE & DISPOSE OF EXIST NG ELECTRIC LINE.
9. CONTRACTOR TO REMOVE & DISPOSE OF EXIST NG GAS L NE AND STRUCTURES.
10. CONTRACTOR TO PLUG & CAP EXISTING SEWER SERVICE LINE. RE C-500 FOR RECONECTION
11. CONTRACTOR TO PLUG & CAP EXISTING GAS L NE
12. CONTRACTOR TO REMOVE AND DISPOSE OF EXISTING WATER METER AND CAP WATER LINE
13. CONTRACTOR TO REMOVE AND DISPOSE OF EXISTING MONUMENT SIGN
14. CONTRACTOR TO REMOVE AND DISPOSE OF EXISTING ELECTRIC METER
15. CONTRACTOR TO REMOVE AND DISPOSE OF EXISTING TOW SIGN
16. CONTRACTOR TO REMOVE AND DISPOSE OF EXISTING AC UNITS

DEMOLITION LEGEND

- SAWCUT LIMITS
- EXISTING CONCRETE PAVEMENT TO BE REMOVED
- EXISTING ASPHALT PAVEMENT TO BE REMOVED
- EXISTING BUILDING TO BE DEMOLISHED
- EXISTING CURB AND GUTTER TO BE REMOVED

GENERAL DEMOLITION NOTES

1. **GENERAL CONSTRUCTION NOTES** REFER TO SHEET C-002 FOR THE GENERAL CONSTRUCTION NOTES FOR THE PROJECT.
2. **INGRESS AND EGRESS** THE CONTRACTOR SHALL MAINTAIN INGRESS AND EGRESS TO THE SITE AND ADJACENT PROPERT ES AT ALL TIMES AND CONDUCT HIS OPERATIONS WITH MINIMUM INTERFERENCE TO PUBLIC OR PRIVATE ACCESSES.
3. **PROTECTION OF EXISTING FACILITIES** CONTRACTOR SHALL PROVIDE, ERECT, AND MA NTAIN TEMPORARY BARR ERS, FENCING, BRACING AND SHORING, AND SECURITY DEVICES TO PROTECT EXISTING STRUCTURES, UTILIT ES, APPURTENANCES, TREES AND LANDSCAPING, AND TO PREVENT MOVEMENT OR SETTLEMENT OF EXISTING STRUCTURE WHICH ARE NOT TO BE DEMOLISHED AND/OR REMOVED.
4. **HAZARDOUS AND/OR CONTAMINATED MATERIALS** THE CONTRACTOR SHALL NOTIFY THE APPROPRIATE GOVERNING AUTHORIT ES AND THE DEVELOPER IMMEDIATELY F HAZARDOUS OR CONTAMINATED MATERIALS ARE DISCOVERED.
5. **STORAGE OF MATERIALS FOR RE-USE** CONTRACTOR SHALL REMOVE AND STORE ON SITE (WHERE DESIGNATED BY THE DEVELOPER), ALL MATERIALS TO BE SALVAGED OR RE-INSTALLED LATER IN CONSTRUCTION.
6. **FRANCHISE UTILITY COORDINATION** THE CONTRACTOR SHALL NOTIFY AND COORD NATE WITH ALL FRANCHISE UTILITY COMPANIES FOR THE REMOVAL AND/OR RELOCATION OF THE RESPECTIVE UT LITY L NES AND APPARATUSES USED BY EACH UT LITY. ALL WORK ASSOCIATED WITH FRANCHISE UTILITY REMOVAL, RELOCATION AND/OR MODIFICATIONS ARE TO BE PERFORMED ONLY BY THAT UTILITY PROVIDER UNLESS SPEC FICALLY NOTED OTHERWISE.
7. **TREE REMOVAL** NO TREES SHALL BE CUT AND/OR REMOVED FROM THE PROJECT SITE UNTIL SPECIFICALLY AUTHORIZED IN WRITHING BY THE GOVERNING AUTHORITY AND/OR DEVELOPER.
8. **SAW CUTTING OF EXISTING PAVEMENT** SAW CUTTING, WHERE NDICATED ON THE DRAW NGS FOR REMOVAL OF EXISTING PAVEMENT, SHALL BE A FULL DEPTH CUT THAT IS NEAT AND TRUE IN ALIGNMENT.
9. **REMOVAL OF UTILITIES** THE CONTRACTOR SHALL DISCONNECT, REMOVE AND/OR CAP ALL UT LITIES WHERE NDICATED ON THE DRAWINGS, AND SHALL DOCUMENT THE LOCATION OF CAPPED UTILIT ES AND SUBSURFACE OBSTRUCTIONS THAT ARE ENCOUNTERED.
10. **BUILDING/STRUCTURE REMOVAL** DEMOLITION AND REMOVAL OF DESIGNATED BU LDINGS AND STRUCTURES SHALL INCLUDE, N ADDITION TO ALL ABOVE GROUND MATERIALS, THE SLAB, FOUNDATIONS AND PIERS. FOUNDATION AND PIERS SHALL BE REMOVED TO A DEPTH OF AT LEAST 5 FEET BELOW PROPOSED F NISHED GRADE, OR AT LEAST 2 FEET BELOW THE BOTTOM OF ANY PROPOSED IMPROVEMENTS N THAT LOCATION, WHICHEVER IS GREATER.
11. **BACKFILLING** THE CONTRACTOR SHALL BACKFILL ALL EXCAVATED AREAS CAUSED AS A RESULT OF DEMOLITION AND PROV DE POSITIVE DRA NAGE TO PREVENT POND NG OF WATER.
12. **REMOVAL OF MATERIALS FROM SITE** ALL MATERIALS TO BE REMOVED FROM THE SITE INCLUDING BUT NOT L MITED TO CONCRETE CURB AND PAVEMENT, ASPHALT PAVEMENT, BUILDING MATERIALS, EXCESS OR UNSUITABLE EARTHEN MATERIAL, UTILITY PIP NG, TREES, BRUSH AND STUMPS, FENC NG, ROCK, TRASH, REFUSE AND OTHER DEBRIS SHALL BECOME TO PROPERTY OF THE CONTRACTOR AND SHALL BE DISPOSED OF OUTSIDE THE L MITS OF THE PROJECT AT THE CONTRACTOR'S EXPENSE. THE CONTRACTOR SHALL COMPLY WITH ALL APPLICABLE LAWS GOVERN NG SP LLAGE OF DEBRIS WH LE TRANSPORTING TO A DISPOSAL SITE.
13. **REPLACEMENT OF DAMAGED FACILITIES** ALL STRUCTURES, UTILIT ES, PAVEMENT, S DEWALKS, WALLS, FENCES, ETC. NOT DESIGNATED TO BE REMOVED BUT THAT ARE DAMAGED DUR NG CONSTRUCTION ACTIVITIES SHALL BE REPLACED TO A CONDITION AS GOOD AS OR BETTER THAN THE CONDITIONS PRIOR TO STARTING THE WORK, SOLELY AT THE EXPENSE OF THE CONTRACTOR.

ALTAR GROUP

ARCHITECTURE ENGINEERING

EAL

STATE OF TEXAS
SANDRA M. NADIRA
137447
LICENSED PROFESSIONAL ENGINEER
FIRM# 20340
02/21/2025

N ULTANT

TAKE 5 OIL CHANGE

DRIVEN BRAND

TAKE IL HAN E
1 WALZEM R AD
AN ANT NI , TX 7 1

REV	DATE	DESCRIPTION
	11/27/24	ISSUE FOR SUP
	02/21/25	RE-ISSUE FOR SUP

AWN Y:
HE KE Y:
JE TN :
4–

HEET NAME:
DEMOLITION PLAN

HEET NUM E:
C-030

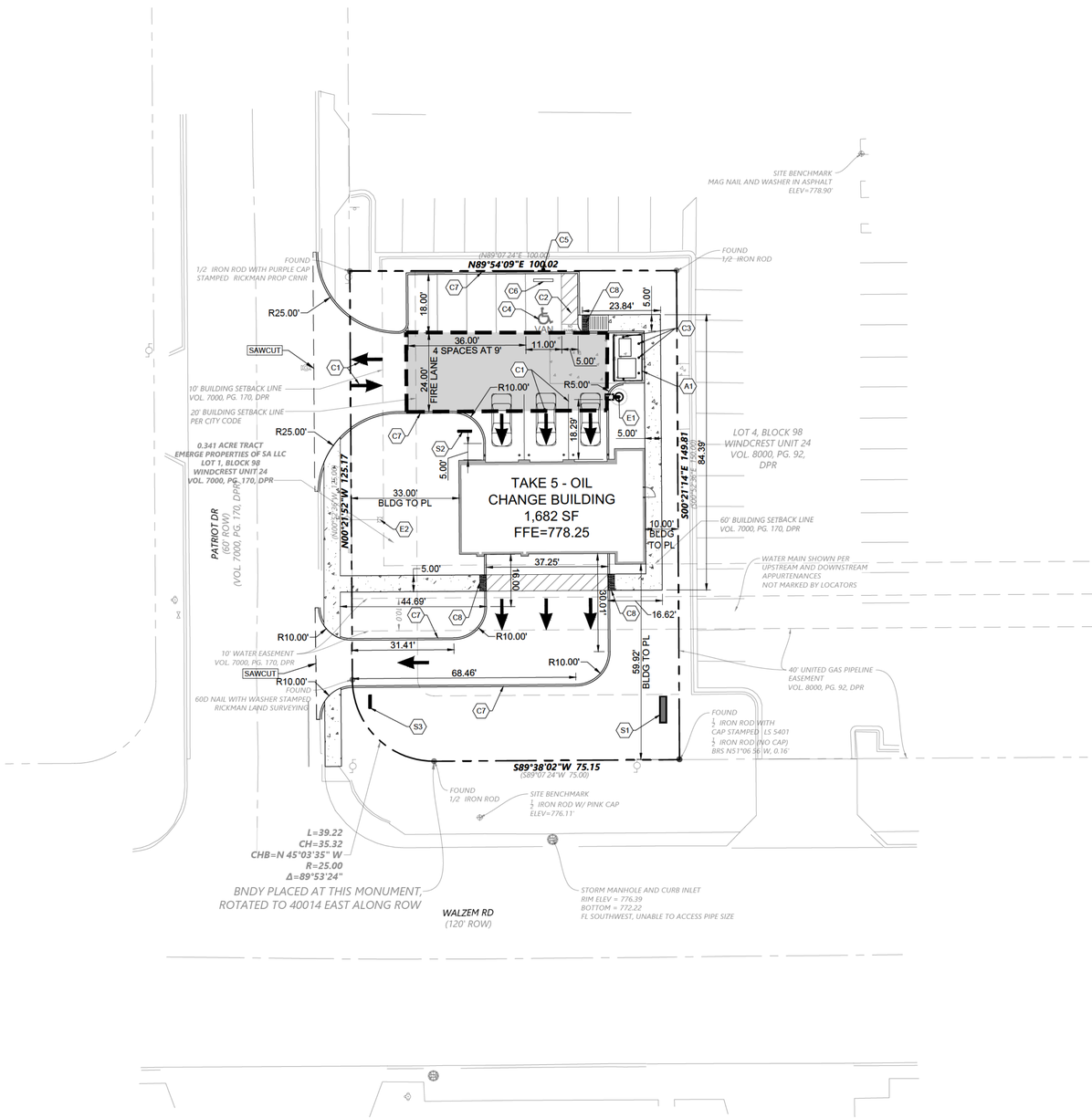

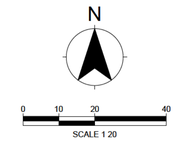

LEGEND

- SAWCUT LIMITS
- PROPOSED FIRE LANE
- VAN ACCESSIBLE PARKING
- SIGN
- LIGHT

SIGN KEYNOTES

- S1 TAKE 5 O L MONUMENT SIGN
- S2 "ENTER" SIGN
- S3 "DO NOT ENTER OR EXIT" SIGN

SITE FEATURES KEYNOTES

- A1 V NYL DUMPSTER ENCLOSURE. REFERENCE ARCH SHEET A1 50 FOR DETAILS.
- C1 PAVEMENT MARK NGS. REFERENCE SHEET C-510 FOR DETAILS.
- C2 4" WHITE STRIP NG. REFERENCE SHEET C-510 FOR DETAILS.
- C3 BOLLARD TYPE I. REFERENCE SHEET C-510 FOR DETAILS.
- C4 ACCESS BLE PARK NG. REFERENCE SHEET C-510 FOR DETAILS.
- C5 ACCESS BLE SIGN. N BOLLARD. REFERENCE SHEET C-510 FOR DETAILS.
- C6 WHEEL STOP. REFERENCE SHEET C-510 FOR DETAILS.
- C7 6" CONCRETE CURB.
- C8 ADA TRAFFIC WARNING DOMES
- E1 LIGHT POLE. REF. TO ELEC. SHEET E#### FOR POLE BASE DETAIL.
- E2 EXIST NG LIGHT

SITE DATA SUMMARY TABLE

ZONING:	B1 NEIGHBORHOOD BUS NESS DISTRICT
SITE AREA:	0 34 AC (14,871 S F.)
BUILD NG AREA:	0 04 AC (1,682 S F.)
PAVEMENT AREA:	0.14 AC (6,114 S F.)
TOTAL IMPERVIOUS AREA:	0.18 AC (7,796 S F.)
LANDSCAPE AREA:	0.16 AC (7,075 S F.)
PARKING REQUIRED: 1 PER 400 SF SERVICE AREA= 1682 / 400	= 5 SPACES
PARKING PROVIDED:	
ADA STALL:	1 SPACE
REGULAR:	4 SPACES
TOTAL:	5 SPACES
QUEU NG CAPACITY:	3 CARS

DIMENSIONAL CONTROL NOTES

1. **GENERAL CONSTRUCTION NOTES** REFER TO SHEET C-002 FOR THE GENERAL CONSTRUCTION NOTES FOR THE PROJECT.
2. **SURVEYING** ALL SURVEYING REQUIRED FOR CONSTRUCTION STAK NG SHALL BE THE RESPONS BILITY OF THE CONTRACTOR. THE DEVELOPER SHALL PROVIDE THE PROPERTY CORNERS AND TWO BENCHMARKS FOR USE AS HORIZONTAL AND VERTICAL DATUM. THE CONTRACTOR SHALL EMPLOY A REGISTERED PROFESSIONAL LAND SURVEYOR TO PERFORM ALL ADDITIONAL SURVEY, LAYOUT AND MEASUREMENT WORK NECESSARY FOR THE COMPLETION OF THE PROJECT.
3. **PROTECTION OF PROPERTY CORNERS AND BENCHMARKS** THE CONTRACTOR SHALL PROTECT ALL PROPERTY CORNER MARKERS AND BENCHMARKS, AND WHEN ANY SUCH MARKERS OR MONUMENTS ARE N DANGER OF BE NG DISTURBED, THEY SHALL BE PROPERLY REFERENCED AND IF DISTURBED, SHALL BE RESET BY A REGISTERED PUBLIC SURVEYOR AT THE EXPENSE OF THE CONTRACTOR.
4. **DIMENSIONAL CONTROL** ALL PAV NG D MENSIONS AND COORDINATES SHOWN ARE TO FACE OF CURB WHERE APPLICABLE. ALL D MENSIONS SHOWN AT PL CURB PO NTS ARE AT THE INTERSECTION OF THE FACE OF CURB.
5. **CURB RADII** ALL CURB RADII SHALL BE 3 FEET TO FACE OF CURB UNLESS OTHERWISE NOTED.
6. **BUILDING DIMENSIONS** CONTRACTOR SHALL REFER TO BUILD NG PLANS FOR ACTUAL BU LDING D MENSIONS. THE DIMENSIONS AND CORNERS SHOWN ARE TO FACE OF OUTSIDE WALLS OF BU LDING.
7. **TOPOGRAPHIC BOUNDARY SURVEY** SURVEY INCLUDES PROPERTY LINE, LEGAL DESCRIPTION, EXIST NG UTILITIES, SITE TOPOGRAPHY WITH SPOT ELEVATIONS, OUTSTAND NG PHYSICAL FEATURES AND EXISTING STRUCTURE LOCATIONS WAS PROVIDED BY:

   SURVEYOR:
   WESTWOOD
   211 NORTH LOOP 1604 EAST, SUITE 205
   SAN ANTONIO, TX 78232
   CONTACT: ETHAN C. OELKE
   PHONE: (210) 265-8300
   E-MAIL: ethan.oelke@westwoodps.com
8. **HANDICAP PARKING** HANDICAPPED PARKING AREAS SHALL BE CONSTRUCTED PER CITY STANDARDS AND SHALL COMPLY WITH REQUIREMENTS OF THE CURRENT, ADOPTED INTERNATIONAL BU LDING CODE.
9. **FIRE LANE** FIRE LANES SHALL BE CONSTRUCTED AND MARKED PER CITY STANDARDS REFERENCE PAVING PLAN FOR DETA LS.
10. **SIGNS** CONTRACTOR TO PROVIDE HANDICAPPED PARKING SIGNS AND POLES.
11. GC TO PROVIDE TEMPORARY CONSTRUCTION FENCE PER AHJ REGULATIONS.
11. **TEMPORARY CONSTRUCTION FENCING** CONTRACTOR TO PROVIDE TEMPORARY CONSTRUCTION FENC NG PER AHJ RULES AND REGULATIONS. REFERENCE SHEET C-130 FOR EROSION AND SEDIMENT CONTROL PLAN.

NOTES:
REFERENCE SHEET C-510 FOR SITE DETAILS

!!CAUTION!!
OVERHEAD POWER.

ALTAR GROUP
ARCHITECTURE
ENGINEERING

SEAL

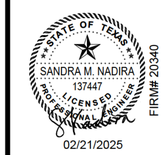

02/21/2025

CONSULTANT

DRIVEN BRANDS

TAKE 5 OIL CHANGE
5331 WALZEM ROAD
SAN ANTONIO, TX 78218

REV	DATE	DESCRIPTION
	11/27/24	ISSUE FOR SUP
	02/21/25	RE-ISSUE FOR SUP

DRAWN BY: CS
CHECKED BY: CS

PROJECT NO.:
DB24-023

SHEET NAME:
SITE PLAN

SHEET NUMBER:
C-100

!!CAUTION!!
OVERHEAD POWER.

N

0 10 20 40
SCALE 1 20

LEGEND

RFB	FILTER FABRIC FENCE
SC−1	CONSTRUCTION ENTRANCE
CTW	CONCRETE TRUCK WASHOUT

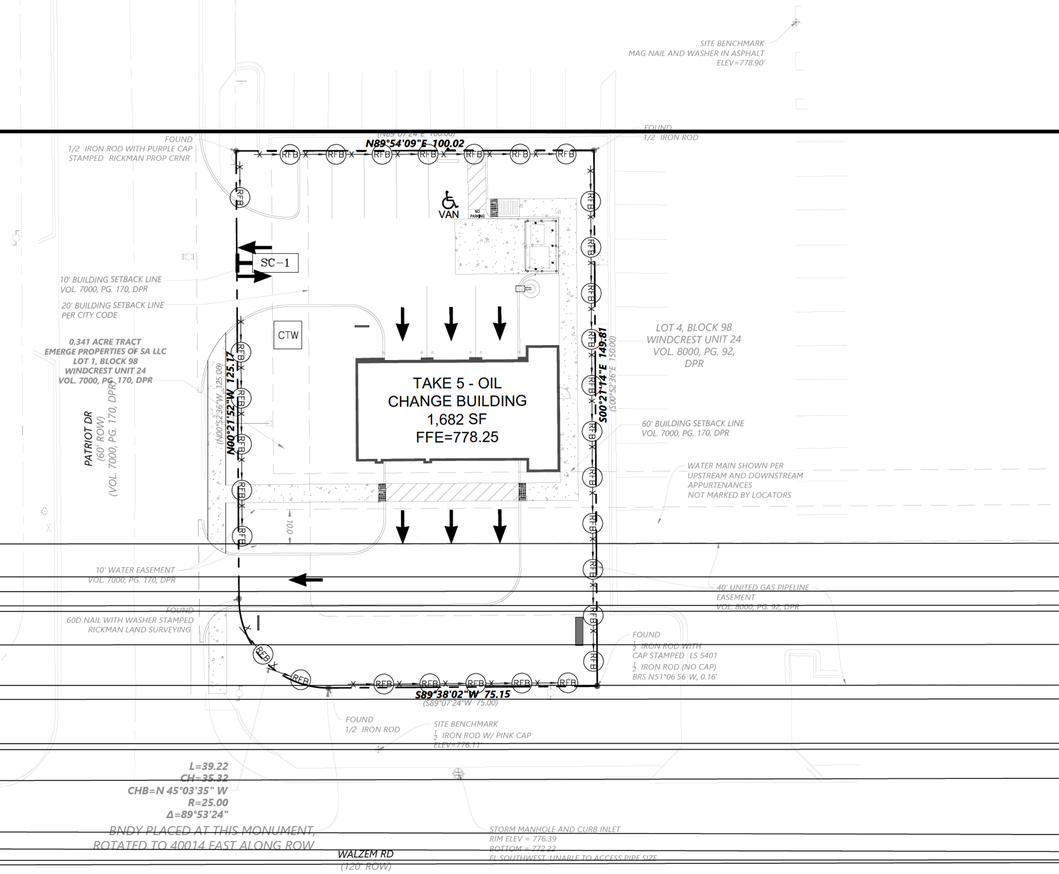

SWPPP NOTES

1. REFERENCE EROSION AND SEDIMENT CONTROL DETAILS SHEET FOR INSTALLATION INSTRUCTIONS FOR CONTROL FEATURES.
2. CONTRACTOR TO PROVIDE CONSTRUCTION STORM WATER POLLUTION PREVENTION PLAN AS REQUIRED BY THE LOCAL REGULATIONS.
3. TEMPORARY SEEDING SHALL BE APPLIED TO AREAS WHERE ACTIVITY HAS CEASED FOR 14 DAYS OR MORE.
4. HYDROMULCHING SHALL BE APPLIED TO DISTURBED AREAS UPON COMPLETION OF CONSTRUCTION ACTIVITIES.
5. CONTRACTOR TO PROVIDE BROADCAST SEEDING WITH COCONUT LINER (OR APPROVED EQUIVALENT) OR SOD ANCHORED USING FOUR 6 IN BY 1-IN BY 6-IN 11 GAUGE STEEL "U" STAPLES PER SOD BLOCK, FOR DISTURBED AREAS WITH SLOPES OF 3:1 OR STEEPER AND FOR UNPAVED AREAS AT THE TOP OF THE RETAINING WALLS.
6. STAGE I INLETS TO BE USED IN UNPAVED AREAS AND STAGE II TO BE USED IN PAVED AREAS.

ALTAR GROUP
ARCHITECTURE
ENGINEERING

EAL

STATE OF TEXAS
SANDRA M. NADIRA
137447
LICENSED
PROFESSIONAL ENGINEER
FIRM# 20340
02/21/2025

INSTALLATION

DRIVEN BRAND

TAKE 5 OIL CHANGE
11 WALZEM ROAD
SAN ANTONIO, TX 78

REV	DATE	DESCRIPTION
	11/27/24	ISSUE FOR SUP
	02/21/25	RE-ISSUE FOR SUP

DRAWN BY:
CHECKED BY:
PROJECT NO.: 4-
SHEET NAME:
EROSION AND SEDIMENT CONTROL PLAN
SHEET NUMBER:
C-130

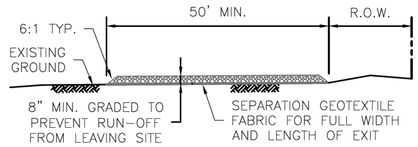

PROFILE

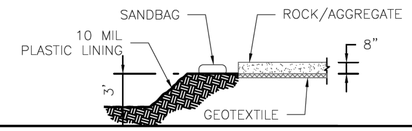

SECTION A–A

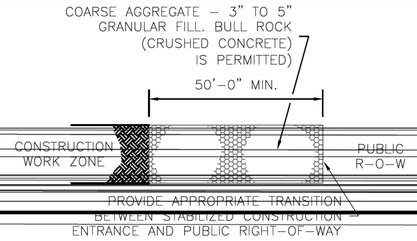

PLAN

GENERAL NOTES:

1. MINIMUM LENGTH IS AS SHOWN ON CONSTRUCTION DRAWINGS OR 50 FEET, WHICHEVER IS MORE.
2. CONSTRUCT AND MAINTAIN CONSTRUCTION EXIT WITH CONSTANT WIDTH ACROSS ITS LENGTH, INCLUDING ALL POINTS OF INGRESS OR EGRESS.
3. UNLESS SHOWN ON THE CONSTRUCTION DRAWINGS, STABILIZATION FOR OTHER AREAS WILL HAVE THE SAME AGGREGATE THICKNESS AND WIDTH REQUIREMENTS AS THE STABILIZED CONSTRUCTION EXIT.
4. WHEN SHOWN ON THE CONSTRUCTION DRAWINGS, WIDEN OR ENGTHEN STABILIZED AREA TO ACCOMMODATE A TRUCK WASHING AREA. PROVIDE OUTLET SEDIMENT TRAP FOR THE TRUCK WASHING AREA.
5. PROVIDE PERIODIC TOP DRESSING WITH ADDITIONAL COARSE AGGREGATE TO MAINTAIN THE REQUIRED DEPTH OR WHEN SURFACE BECOMES PACKED WITH MUD.
6. PERIODICALLY TURN AGGREGATE TO EXPOSE A CLEAN DRIVING SURFACE.
7. MINIMUM 14' WIDTH FOR ONE WAY TRAFFIC AND 20' WIDTH FOR TWO WAY TRAFFIC.

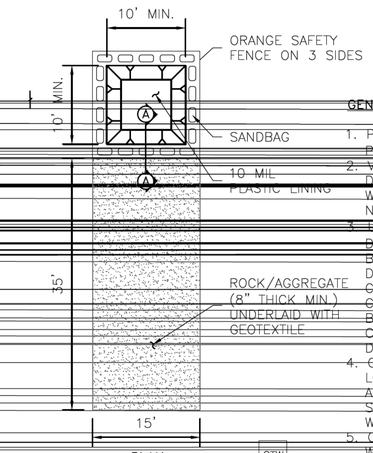

PLAN

CTW

SYMBOL

GENERAL NOTES:

1. POST A SIGN READING "CONCRETE WASH UT PIT" NEXT TO THE PIT.
2. VERBALLY INSTRUCT THE CONCRETE TRU K W DRIVERS WHERE THE PIT IS AND TO WASHOUT THEIR TRUCKS IN THE PIT AN NOWHERE ELSE.
3. UPON THE CONCRETE SETTING UP (CH IN , DRYING OUT), THE CONCRETE WASTE SHALL BE REMOVED FROM THE PROJECT SITE AN DISPOSED OF PROPERLY BY THE CONTRACTOR. AFTER REMOVAL OF THE CONCRETE WASTE, THE WASHOUT PIT SHALL BE FILLED WITH CLEAN FILL MATERIAL AN COMPACTED TO IN–SITU CONDITIONS, O A DIRECTED BY THE PROJECT SPECIFICATI N .
4. CONCRETE WASHOUT PITS SHALL NOT E LOCATED DIRECTLY ADJACENT TO, NOR AT ANY TIME DRAIN INTO THE STORM SEWE SYSTEM OR ANY OTHER SWALE, DITCH, WATERWAY.
5. CONSTRUCT ENTRY ROAD AND BOTTOM F WASHOUT AREA TO SUPPORT EXPECTED LOADINGS FROM TRUCKS EQUIPMENT.

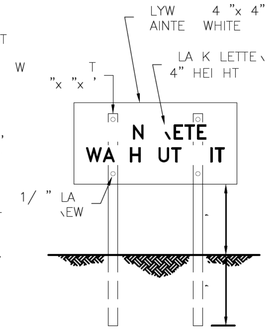

I N I ETAIL
E IVALENT

01	NOT USED	02	STABILIZED CONSTRUCTION ACCESS	03	CONCRETE TRUCK WASHOUT

1. SET POSTS AT REQUIRED SPACING
2. EXCAVATE A 6"x6" TRENCH UPSLOPE ALONG THE LINE OF POSTS AND SECURE WIRE FENCE TO POSTS
3. ATTACH FILTER FABRIC TO POSTS AND EXTEND IT INTO THE TRENCH. BACKFILL AND COMPACT THE EXCAVATED SOIL.

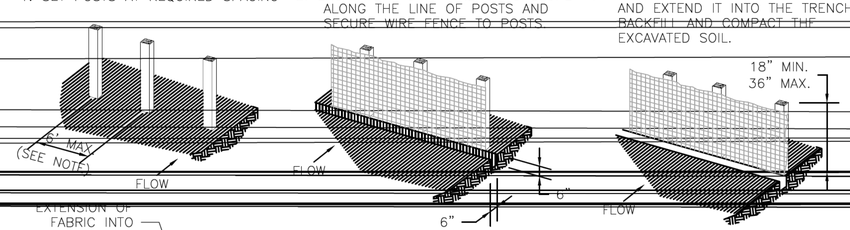

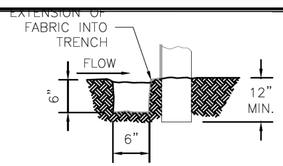

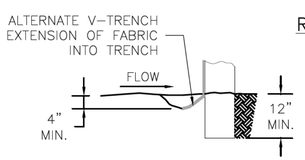

REINFORCED FILTER FABRIC BARRIER

RFB

SYMBOL

GENERAL NOTES:

1. SECURELY FASTEN MESH FENCING TO POSTS WITH STAPLES OR TIE WIRES.
2. SECURELY FASTEN FILTER FABRIC TO MESH FENCING.
3. WHEN TWO SECTIONS OF FILTER FABRIC ADJOIN EACH OTHER, OVERLAP 6 INCHES AT A POST, FOLD TOGETHER, AND ATTACH TO A POST.
4. REMOVE SEDIMENT DEPOSITS WHEN SILT REACHES ONE–THIRD OF THE HEIGHT OF THE FENCE IN DEPTH.

04	REINFORCED FILTER FABRIC BARRIER	05	NOT USED

ALTAR GROUP

ARCHITECTURE ENGINEERING

EAL

STATE OF TEXAS
SANDRA M. NADIRA
137447
LICENSED PROFESSIONAL ENGINEER

FIRM# 20340

02/21/2025

N ULTANT

TAKE 5 OIL CHANGE

DRIVEN BRAND

TAKE IL HAN E
1 WALZEM R AD
AN ANT NI , TX 7 1

REV	DATE	DESCRIPTION
	11/27/24	ISSUE FOR SUP
	02/21/25	RE-ISSUE FOR SUP

AWN Y:
HE KE Y:
JE TN :
4–

HEET NAME:
EROSION AND SEDIMENT CONTROL PLAN DETAILS

HEET NUM E:
C-131

!!CAUTION!!
OVERHEAD POWER.

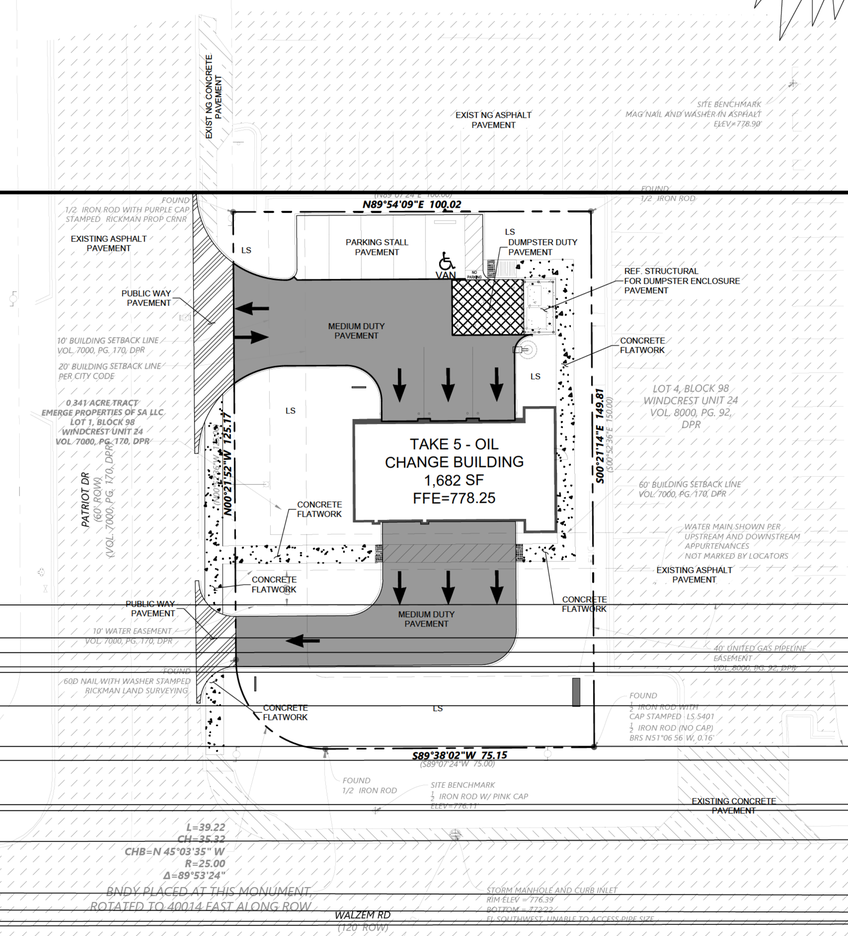

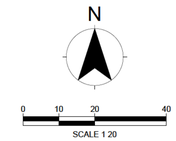

PAVING LEGEND

EXISTING ASPHALT PAVEMENT

EXISTING CONCRETE PAVEMENT

MEDIUM DUTY PAVEMENT
6" 4,000 PSI REINFORCED CONCRETE PAVEMENT W/ #3 BARS @ 18" O.C.E.W. ON 6" LIME STABILIZED SUBGRADE. REFERENCE GEOTECH REPORT FOR SUBGRADE PREPARATION THRESHOLDS AND PAVING RECOMMENDATIONS

PARKING STALL PAVEMENT
5" 4,000 PSI REINFORCED CONCRETE PAVEMENT W/ #3 BARS @ 18" O.C.E.W. ON 6" LIME STABILIZED SUBGRADE. REFERENCE GEOTECH REPORT FOR SUBGRADE PREPARATION THRESHOLDS AND PAVING RECOMMENDATIONS.

SIDEWALK & FLATWORK
4" REINFORCED CONCRETE SIDEWALK FLATWORK (3,000 PSI AT 28 DAYS) W/ #3 BARS @ 18" O.C.E.W. ON COMPACTED SUBGRADE. REFERENCE GEOTECH REPORT FOR SUBGRADE PREPARATION THRESHOLDS AND PAVING RECOMMENDATIONS

DUMPSTER DUTY PAVEMENT
7" 4,000 PSI REINFORCED CONCRETE PAVEMENT W/ #3 BARS @ 18" O.C.E.W. ON 6" LIME STABILIZED SUBGRADE. REFERENCE GEOTECH REPORT FOR SUBGRADE PREPARATION THRESHOLDS AND PAVING RECOMMENDATIONS.

PUBLIC WAY PAVEMENT
7" 3,500 PSI CONCRETE PAVEMENT WITH #3 BARS AT 18" O.C.E.W. ON 6" LIME STABILIZED SUBGRADE. REFERENCE GEOTECH REPORT FOR SUBGRADE PREPARATION THRESHOLDS AND PAVING RECOMMENDATIONS.

GENERAL PAVING NOTES

1. **GENERAL CONSTRUCTION NOTES** REFER TO SHEET C-002 FOR THE GENERAL CONSTRUCTION NOTES FOR THE PROJECT.
2. **PAVEMENT DESIGN** ALL ON SITE CONCRETE PAVING SHALL BE OF THE THICKNESS AND STRENGTH SHOWN ON THE PLAN. CONCRETE SHALL BE THE DESIRED STRENGTH AT 28 DAYS AND REINFORCED PER PAVING LEGEND AND GEOTECHNICAL REPORT.
3. **REINFORCING BARS**: ALL REINFORCING BARS SHALL BE GRADE 40 KSI DEFORMED REINFORCING STEEL. REINFORCING SHALL BE SUPPORTED BY CHAIRS AND SPACED AT 16 SF MAX. INTERVALS. REFERENCE LEGEND FOR REINFORCEMENT SIZE AND SPACING.
4. **BAR CHAIRS** ALL RE NFORC NG STEEL AND DOWEL BARS N PAVEMENT SHALL BE SUPPORTED AND MAINTAINED AT THE CORRECT CLEARANCES BY THE USE OF BAR CHAIRS OR OTHER APPROVED SUPPORT.
5. **TEMPERATURE CONDITIONS FOR CONCRETE PLACEMENT** CONCRETE SHALL NOT BE PLACED WHEN THE TEMPERATURE IS BELOW 40 DEGREES FAHRENHEIT AND FALLING, BUT MAY BE PLACED WHEN TEMPERATURE IS ABOVE 35 DEGREES FAHRENHEIT AND RISING. THE TEMPERATURE READING SHALL BE TAKEN N THE SHADE AND AWAY FROM ARTIFICIAL HEAT.
6. **CONCRETE PAVEMENT CURING** CONCRETE TO BE FLOAT FINISHED AND CURED FOR A M N MUM OF 72 HOURS. MEMBRANE CURING TYPE 2, WHITE PIGMENTED, SHALL BE USED FOR CURING ALL CONCRETE SURFACES IMMEDIATELY AFTER FINISHING OF SURFACES AND SHALL BE N ACCORDANCE WITH SECTION THE TEXAS HIGHWAY STANDARD SPECIFICATIONS, ITEM 1526.
7. **SUBGRADE PREPARATION** SUBGRADE SHALL BE SCARIF ED TO A DEPTH OF 6 NCHES AND SHALL BE RECOMPACTED TO A (MIN.) OF 95% OF THE STANDARD PROCTOR (ASTM -0698) MAX MUM DRY DENSITY AT A MOISTURE CONTENT WITH N ±2% OPTIMUM MOISTURE CONTENT. REFER TO GEOTECHNICAL REPORT AND SUPPLEMENTS BY PROFESSIONAL SERVICE NDUSTRIES, REPORT NO. 0312-3316 DATED OCTOBER 4, 2024.
   - PREPARATION OF SUBGRADE UNDER PAVED AREAS SHALL BE PERFORMED IN ACCORDANCE WITH THE GOVERNING AUTHORITIES' SPECIFICATIONS OR THE GEOTECHNICAL REPORT. THE MORE RESTRICTIVE REQU REMENTS SHALL APPLY.
   - PREPARATION OF THE SUBGRADE FOR PAVING WITHIN RIGHT-OF-WAY, ACCESS EASEMENTS AND/OR FIRE LANES SHALL NOT BE NITIATED UNTIL ALL TESTING OF UNDERGROUND UTILITIES HAS BEEN COMPLETED AND VERIFIED TO MEET THE GOVERNING AUTHORITIES' SPECIFICATIONS AND AUTHORIZATION TO PROCEED HAS BEEN RECEIVED FROM THE INSPECTOR.
   - PAVEMENT SUBGRADE SHALL NOT BE ALLOWED TO RETA N WATER. WET MATERIAL SHALL BE REMOVED TO DRY, SOUND MATERIAL AND APPROPRIATE DENSITY ACHIEVED PRIOR TO PAVING OPERATIONS.
8. **PROOF-ROLL SUBGRADE** THE SUBGRADE SHALL BE PROOF-ROLLED WITH HEAVY PNEUMATIC EQU PMENT. ANY SOFT OR PUMPING AREAS SHALL BE EXCAVATED TO FIRM SUBGRADE AND BACKF LLED AND RE-COMPACTED IN CONFORMANCE WITH THE GEOTECHNICAL REPORT.
9. **LIME/CEMENT STABILIZED SUBGRADE** IF REQU RED FOR PAVEMENT SUBGRADE TREATMENT PER THE GEOTECHNICAL REPORT, HYDRATED L ME SHALL MEET THE REQU REMENTS OF TXDOT ITEM 260, LIME TREATMENT USED AS SUBGRADE. L ME SHALL BE APPLIED AT THE MINIMUM RATE OF __% BY WEIGHT, THOROUGHLY MIXED AND BLENDED WITH THE TOP __ INCHES OF SUBGRADE AND UNIFORMLY COMPACTED TO A M N MUM OF __% OF THE STANDARD PROCTOR (ASTM D698) DETERMINED BY THAT TEST. THE ACTUAL AMOUNT OF L ME REQU RED SHOULD BE CONFIRMED BY ADDITIONAL LABORATORY TESTS PRIOR TO CONSTRUCTION. L ME STAB LIZATION SHALL EXTEND AT LEAST 1 FOOT BEYOND THE EDGE OF THE PAVEMENT AREA. IT SHOULD BE PROTECTED AND MAINTA NED IN A MOIST CONDITION UNT L THE PAVEMENT IS PLACED.
10. **SAND CUSHION PROHIBITED** THE USE OF "LEVEL UP" SAND CUSHION UNDER PAVEMENT, NCLUDING SIDEWALKS, IS STRICTLY PROH BITED.
11. **PAVEMENT REMOVAL** BREAKOUTS FOR REMOVAL OF EXISTING PAVEMENT AND CURBS SHALL BE MADE BY A FULL-DEPTH SAWCUT WHEN ADJACENT TO PROPOSED PAVING AND/OR CURBS.
12. **CONNECTION TO EXISTING PAVEMENT** IN ALL NSTANCES WHERE THE CONTRACTOR CONNECTS PROPOSED CONCRETE PAVEMENT TO EXIST NG CONCRETE PAVEMENT, AT LEAST 15 INCHES OF REINFORCING STEEL SHALL BE EXPOSED FROM THE EXISTING CONCRETE PAVEMENT OR THE CONTRACTOR SHALL PROVIDE HORIZONTAL DOWEL BARS PER THE DETA LS. PROPOSED CONCRETE CURBS SHALL MATCH ELEVATIONS OF EXISTING CURB.
13. **TESTING** SAMPLES FOR STRENGTH TESTS OF THE CONCRETE PAVEMENT WILL BE TAKEN BY THE GEOTECHNICAL ENGINEER TO VERIFY DESIGN STRENGTH. PAVEMENT AREAS FOUND TO BE DEFIC ENT IN STRENGTH SHALL BE REMOVED AND REPLACED SOLELY AT THE EXPENSE OF THE CONTRACTOR. THE GEOTECHNICAL ENGINEER SHALL ALSO RANDOMLY CORE THE PAVEMENT TO VERIFY THE THICKNESS OF CONCRETE. ANY AREA FOUND TO BE DEFICIENT IN THICKNESS SHALL BE REMOVED AND REPLACED SOLELY AT THE EXPENSE OF THE CONTRACTOR.
14. **SIDEWALKS AND RAMPS** CONSTRUCTION OF S DEWALKS, WHEELCHA R RAMPS AND ACCESSIBLE ROUTES SHALL BE IN ACCORDANCE WITH THE AMERICANS DISABILITY ACT (ADA) OR TAS.
   - SLOPED SIDEWALKS ADJACENT TO BU LDING SHALL NOT HAVE SLOPES GREATER THAN 5% OR 1:20 ALONG THE TRAVEL PATH AND A MAX 2% CROSS FALL. NO RAMPS SHALL BE USED ADJACENT TO BU LDING.
15. **PAVEMENT MARKINGS** CONCRETE FOR HANDICAP RAMPS SHALL BE COLOR CONDITIONED "T LE RED" WITH A COLORING ADD MIXTURE SPEC FICALLY FOR USE IN CONCRETE. CONTRACTOR SHALL USE CHROMIX ADD MIXTURES OR EQUIVALENT. AS MANUFACTURED BY L.M. SCHOFIELD STAIN COMPANY AT ALL S DEWALKS AS NOTED ON PLAN.
   - PAVEMENT MARKINGS SHALL BE PROVIDED IN ACCORDANCE WITH THE 2011 TEXAS "UNIFORM TRAFFIC MANUAL FOR PAVEMENT MARKINGS". FIRE LANES SHALL BE STRIPED IN ACCORDANCE WITH THE GOVERNING AUTHORITIES' REQUIREMENTS. REFER TO THE D MENSION CONTROL PLAN FOR EXACT PLACEMENT. ALL HANDICAP SYMBOLS, SIGNAGE AND PAVEMENT MARKINGS SHALL COMPLY WITH ADA AND THE TAS STANDARDS. ALL PARKING SPACES SHOWN ON PROPOSED CONSTRUCTION SHALL BE MARKED WITH 4-INCH WIDE WHITE PAINTED PAVEMENT STR PING.
   - **IRRIGATION CONDUIT** ALL IRRIGATION CONDUIT AND SLEEVES SHALL BE TWO 4- NCH SCHEDULE 40 PVC, INSTALLED WITH A MINIMUM OF 24-INCHES OF COVER. REFERENCE THE PAV NG PLAN AND/OR LANDSCAPE PLANS FOR NUMBER OF CONDUITS, SIZE AND LOCATIONS OF PROPOSED IRRIGATION CONDUITS AND SLEEVES.
   - **PAVEMENT WARRANTY** CONTRACTOR W LL PROV DE A 2-YEAR UNCONDITIONAL MAINTENANCE FREE WARRANTY ON ALL PAVEMENT SURFACES.
   - **PAVEMENT WITHIN TEXAS DOT RIGHT-OF-WAY** ALL PAVEMENT CONSTRUCTION WITHIN TXDOT RIGHT-OF-WAY SHALL BE IN ACCORDANCE WITH THE LATEST EDITION OF TEXAS DOT STANDARDS AND SPECIFICATIONS. THE ABOVE NOTES PERTAIN TO ALL PAVEMENT LOCATED WITHIN THE PROPERTY BOUNDARY AND SHALL NOT PERTAIN TO CONSTRUCTION OF PAVEMENT WITH N TEXAS DOT RIGHT-OF-WAY.

PAVEMENT JOINTING NOTES

1. ~~**PAVEMENT JOINT LAYOUT** JOINTS SHALL BE INSTALLED AT A MAXIMUM SPACING OF~~ 12 FEET O.C.E.W. EXPANSION JOINTS SHALL BE INSTALLED AT A MAXIMUM SPACING OF 60 FEET. LEVEL UP SAND COURSE WILL NOT BE ALLOWED. IF A PROPOSED PAVEMENT JOINT LAYOUT LAN HAS BEEN ROVIDED B HE ENG NEER HE CON RAC OR SHALL IM LEMEN HA LAN OR PROV DE AN ALTERNATE JOINT LAYOUT TO THE ENG NEER FOR REVIEW. IF A PAVEMENT JOINT LAYOUT PLAN HAS NOT BEEN PROVIDED, THE CONTRACTOR W LL BE RESPONS BLE FOR PREPARATION OF THE PLAN AND SUBMITTAL TO THE ENGINEER FOR REVIEW. THE CONTRACTORS' JOINT LAYOUT PLAN SHALL BE PROVIDED TO THE ENGINEER FOR REVIEW A MINIMUM OF 2 WEEKS PRIOR TO BEGINN NG PAVING CONSTRUCTION.
2. **SAW CUTTING** SAW CUTTING SHALL BE DONE WITHIN EIGHT HOURS OF POUR OR AS SOON AS CONCRETE CAN SUPPORT WEIGHT. THE CONTRACTOR SHALL MARK JO NT LOCATIONS AT THE CENTERL NE OF THE DOWEL LENGTH DUR NG HIS PAVING OPERATIONS. ALL SAWED JOINTS ARE TO BE TRUE N ALIGNMENT AND SHALL CONT NUE THROUGH THE CURB. RADIAL JO NTS SHALL BE NO SHORTER THAN 18 NCHES.
3. **JOINT SEALING** ALL CONSTRUCTION & CONTROL JOINTS SHALL BE SAWN, CLEANED OF DEBRIS, D RT, DUST, SCALE, CURING COMPOUND AND CONCRETE, BLOWN DRY AND IMMEDIATELY SEALED. JO NT SEALING MATERIAL SHALL BE HOT POURED RUBBER SEALANT OR AN APPROVED EQUAL. SPECIFICATIONS TO BE SUBMITTED TO ENGINEER PRIOR TO PLACEMENT.
4. **ODD SHAPED PANELS** ODD SHAPED PANELS SHALL BE REINFORCED WITH #3 BARS AT 18 INCHES O.C.E.W. AN ODD SHAPED PANEL IS CONS DERED TO BE ONE IN WHICH THE SLAB TAPERS TO A SHARP ANGLE WHEN THE LENGTH TO W DTH RATIO EXCEEDS 3 TO 1 OR WHEN A SLAB IS NEITHER SQUARE NOR RECTANGULAR.
5. **EXPANSION JOINTS** THE CONTRACTOR SHALL PROV DE AN EXPANSION JOINT AROUND THE PER METER OF ANY BLOCKOUT IN THE CONCRETE PAVING.

NOTES:
REFERENCE SHEET C-520 FOR PAVING DETAILS

ALTAR GROUP
ARCHITECTURE
ENGINEERING

EAL

STATE OF TEXAS
SANDRA M. NADIRA
137447
LICENSED
PROFESSIONAL ENGINEER
02/21/2025
FIRM# 20340

N ULTANT

DRIVEN BRAND
TAKE 5 OIL CHANGE
1 WALZEM ROAD
SAN ANTONIO, TX 78217

REV	DATE	DESCRIPTION
	11/27/24	ISSUE FOR SUP
	02/21/25	RE-ISSUE FOR SUP

DRAWN BY:
CHECKED BY:
PROJECT NO.: 4-
SHEET NAME: PAVING PLAN
SHEET NUMBER: C-200

!!CAUTION!!
OVERHEAD POWER.

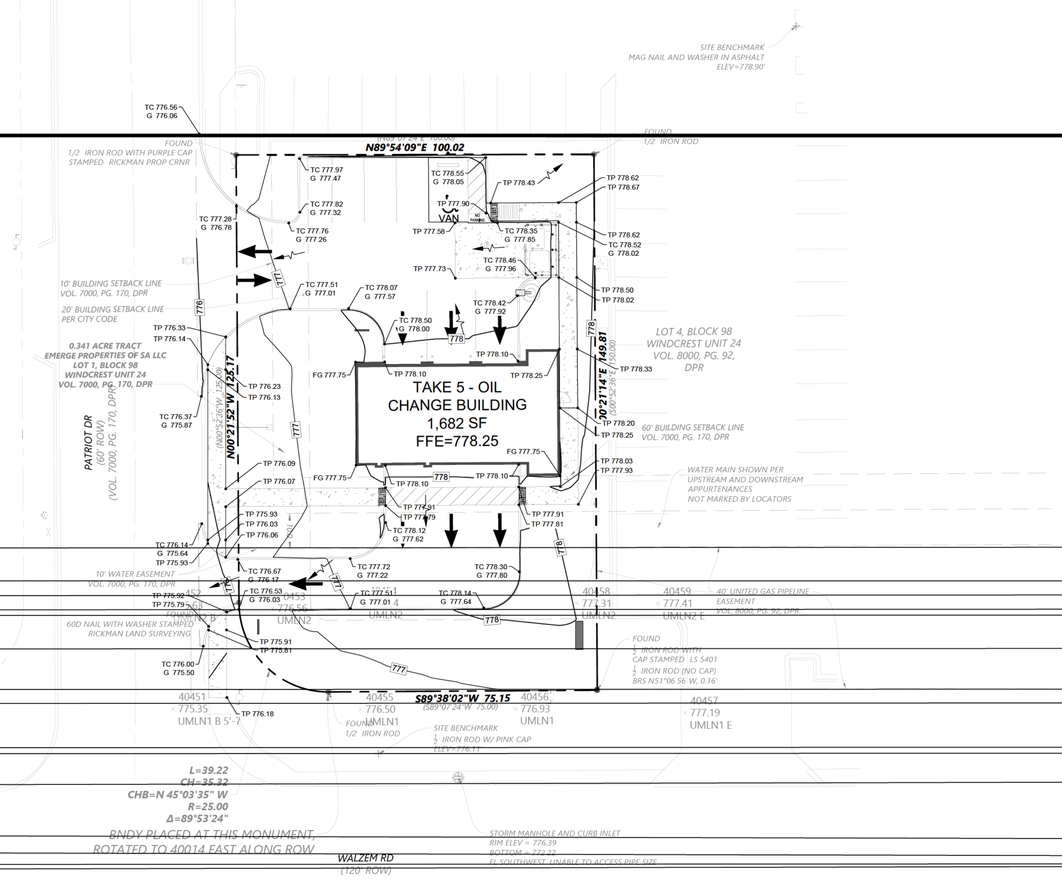

NOTES:

- CONTRACTOR SHALL MATCH EXISTING ELEVATION AT ALL SAWCUT LIMITS
- LANDSCAPE GRADE SHALL NOT EXCEED A 4:1 SLOPE
- ALL NEW SIDEWALKS (INCLUDING SIDEWALKS TO BE REMOVED & REPLACED) SHALL NOT EXCEED 2% CROSS SLOPE & 5% RUNNING SLOPE. FOR SIDEWALKS CONTAINED WITHIN THE PUBLIC ROW AND WHEN ADJACENT STREET GRADES EXCEED 5% THEN THE SIDEWALK GRADE RUNNING SLOPE MAY MATCH STREET GRADES
- ALL ADA ACCESS ROUTES SHALL HAVE A MAXIMUM 5% LONGITUDINAL SLOPE AND A 2% MAXIMUM CROSS SLOPE
- ALL ADA PARKING SPACES AND ROUTING FROM PARKING LOT SHALL MAINTAIN 2% MAXIMUM SLOPE IN ALL DIRECTIONS

GRADING LEGEND

	PROPOSED MAJOR CONTOUR
	PROPOSED MINOR CONTOUR
	EXISTING MAJOR CONTOUR
	EXISTING MINOR CONTOUR
HP	HIGH POINT
	FLOW DIRECTION
TC XXX.XX G XXX.XX	TOP OF CURB AND GUTTER ELEVATION
TP XXX.XX	TOP OF PAVEMENT SPOT ELEVATION
FG XXX.XX	F NISH GRADE
EX XX.XX	EXISTING SPOT ELEVATION
	ACCESSIBLE PATHWAY

GRADING NOTES

1. **GENERAL CONSTRUCTION NOTES** REFER TO SHEET C-002 FOR THE GENERAL CONSTRUCTION NOTES FOR THE PROJECT.
2. **UNDISTURBED AREAS** PRIOR TO GRADING, BRUSH REMOVAL, OR SITE CONSTRUCTION, THE CONTRACTOR SHALL MEET WITH THE DEVELOPER AND/OR ENGINEER AT THE SITE TO ASCERTAIN THE AREAS OF THE PROJECT SITE THAT ARE TO BE PROTECTED AND PRESERVED. REFER TO THE "GENERAL TREE PROTECTION NOTES" FOR ALL CONSTRUCTION IN THE VIC NITY OF EXIST NG TREES.
3. **TESTING** ALL EARTHWORK OPERATIONS SHALL BE OBSERVED AND TESTED ON A CONT NU NG BASIS BY THE GEOTECHNICAL ENG NEER FOR CONFORMANCE WITH THE REQUIREMENTS SET FORTH IN THE GEOTECHNICAL STUDY PREPARED BY PROFESSIONAL SERVICE NDUSTR ES, REPORT NO. 0312-3316 DATED OCTOBER 4, 2024, WHICH IS MADE A PART OF THESE CONSTRUCTION DOCUMENTS.
4. **STRIPPING AND DEBRIS REMOVAL** THE BUILD NG PAD SITES, AREAS TO BE PAVED, AND ALL AREAS THAT ARE TO RECEIVE FILL MATERIAL SHALL BE STRIPPED OF VEGETATION, TREES, ROOTS, STUMPS, DEBRIS, AND OTHER ORGANIC MATERIAL. THE DEPTH OF STRIPPING IS EST MATED TO BE ON THE ORDER OF 6 INCHES. N ORDER TO REMOVE THE SURFACE SOIL CONTA NING ORGANIC MATERIAL. THE ACTUAL STR PP NG DEPTH SHALL BE BASED ON FIELD OBSERVATIONS. STRIPPED TOPSOIL SHALL BE STOCKP LED IN A LOCATION ON-SITE APPROVED BY THE DEVELOPER. ALL TREES, INCLUD NG STUMPS AND ROOT SYSTEMS, VEGETATION, DEBRIS AND OTHER OBJECTIONABLE MATERIAL SHALL BE REMOVED AND DISPOSED OFF-SITE. THE CONTRACTOR SHALL COMPLY WITH ALL APPLICABLE LAWS GOVERNING SPILLAGE OF DEBRIS WHILE TRANSPORTING TO A DISPOSAL SITE. ALL COSTS ASSOCIATED WITH DISPOSAL OF MATERIAL SHALL BE INCLUDED N THE CONTRACT AMOUNT.
5. **BURNING** BURN NG SHALL NOT BE PERMITTED ON THE PROJECT SITE UNLESS APPROVED IN WRITING BY THE GOVERN NG AUTHORITIES AND THE DEVELOPER.
6. **UNSTABLE MATERIAL** WHEN CLAY OR OTHER UNSTABLE MATERIAL IS PRESENT IN AREAS OF PROPOSED BUIL D NG PADS OR PAVED AREAS, THE GEOTECHNICAL ENGINEER SHALL OBSERVE THE STABILITY OF ANY EXIST NG CLAY OR WEATHERED MATERIAL THAT IS PRESENT N THE SUBBASE, AND SHALL DETERM NE WHETHER ADDITIONAL EXCAVATION OF THESE MATERIALS W LL BE REQU RED. IF THIS MATERIAL IS DEEMED SUITABLE FOR SUBBASE MATERIAL, THE SUBGRADE SHALL BE SCARIFIED TO A DEPTH OF SIX INCHES, ITS MOISTURE CONTENT ADJUSTED AS RECOMMENDED BY THE GEOTECHNICAL ENG NEER, AND THEN RE-COMPACTED TO AT LEAST 95% OF THE OPT MUM DENSITY DETERMINED BY THE STANDARD PROCTOR TEST, ASTM D - 698 PRIOR TO PLACEMENT OF FILL MATERIALS.
7. **CONTROLLED FILL** ALL SOILS USED FOR CONTROLLED F LL SHOULD BE FREE OF ROOTS, VEGETATION, AND OTHER DELETERIOUS OR UNDESIRABLE MATTER. ROCKS LESS THAN 4 NCHES IN LARGEST DIMENSION WITH N 15 INCHES OF PROPOSED SUBGRADE ELEVATION, LESS THAN 6 INCHES IN SIZE FROM 15 NCHES TO 36 INCHES OF PROPOSED SUBGRADE ELEVATION, LESS THAN 12 INCHES N SIZE FROM 36 NCHES TO 72 NCHES OF PROPOSED SUB GRADE ELEVATION, AND LESS THAN 18 INCHES N LARGEST DIMENSION FOR FILLS IN EXCESS OF 72 INCHES FROM SUBGRADE ELEVATION, W LL BE ALLOWED AS ACCEPTABLE F LL MATERIAL. ROCK FILLS SHOULD BE SUPPLEMENTED WITH A SUFFICIENT AMOUNT OF F NE MATERIAL TO PREVENT VOIDS. SOILS IMPORTED FROM OFF-SITE FOR USE AS FILL SHOULD BE APPROVED BY THE GEOTECHNICAL ENGINEER. THE FILL MATERIAL SHOULD BE PLACED N LEVEL, UN FORM L FTS, WITH EACH LIFT COMPACTED TO THE M NIMUM DRY DENSITY WITHIN THE COMPACT ON SOIL MOISTURE RANGES RECOMMENDED. THE LOOSE LIFT THICKNESS SHOULD NOT EXCEED 8 INCHES. EACH LAYER SHOULD BE PROPERLY PLACED, MIXED, SPREAD, AND COMPACTED TO BETWEEN 95% AND 100% OF STANDARD PROCTOR DENSITY AS DETERMINED BY ASTM D 698.
8. **PROPOSED GRADES** THE PROPOSED CONTOURS NDICATED ON THE GRAD NG PLAN ARE FINISHED GRADES AND ARE SHOWN AT ONE-FOOT INTERVALS. SPOT ELEVATIONS SHOWN IN PAVED AREAS ARE TOP OF PAVEMENT, UNLESS NOTED OTHERWISE.
9. **BUILDING ENTRANCE GRADES** REFER TO THE BU LDING PLANS FOR DETAILED SPOT GRAD NG AT THE BUILDING ENTRANCE AREAS. THE CONTRACTOR SHALL COMPLY WITH ALL ADA AND LOCAL STATE GOVERNING AUTHORITY STANDARDS FOR REQUIREMENTS REGARD NG MAX MUM SLOPES FOR HANDICAP PARKING AREAS, SIDEWALKS, ACCESS RAMPS AND ACCESS BLE ROUTES.
10. **LANDSCAPE AREAS** ALL LANDSCAPE AREAS AND OTHER DISTURBED AREAS WITHIN THE L MITS OF THE PROPERTY NOT DESIGNATED TO BE PAVED SHALL RECEIVE 6 INCHES OF TOPSO L. REFER TO THE EROSION AND SEDIMENT CONTROL PLANS AND/OR LANDSCAPE PLANS FOR L MITS OF TOPSO L **PLACEMENT.**
11. **UNCLASSIFIED EXCAVATION** ALL UNCLASS F ED EXCAVATION, INCLUDING, BUT NOT LIMITED TO, CUT & F LL, HAUL IN, HAUL OFF ASSOCIATED WITH CONSTRUCTION OF PAVEMENT TO FINAL GRADE SHALL BE THE RESPONSIB LITY OF THE CONTRACTOR.

ALTAR GROUP
ARCHITECTURE
ENGINEERING

EAL

STATE OF TEXAS
SANDRA M. NADIRA
137447
LICENSED
PROFESSIONAL ENGINEER
FIRM# 20340
02/21/2025

N ULTANT

DRIVEN BRAND

TAKE 5 OIL CHANGE

TAKE 5 OIL CHANGE
1 WALZEM ROAD
SAN ANTONIO, TX 78217

REV	DATE	DESCRIPTION
	11/27/24	ISSUE FOR SUP
	02/21/25	RE-ISSUE FOR SUP

DRAWN BY:
CHECKED BY:
PROJECT #: 4-
SHEET NAME: GRADING PLAN
SHEET NUMBER: C-300

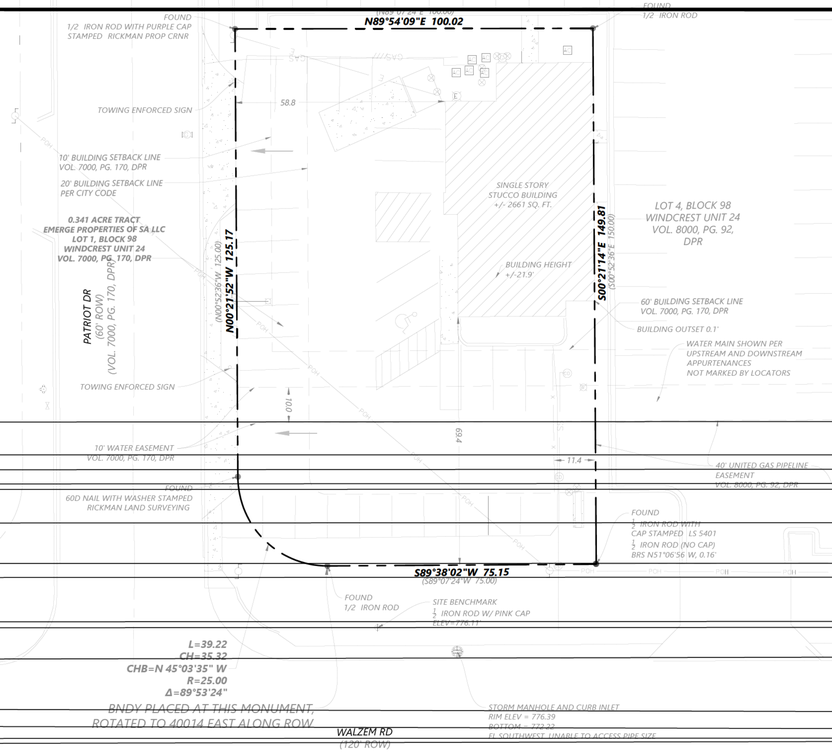

PRE-DEVELOPMENT

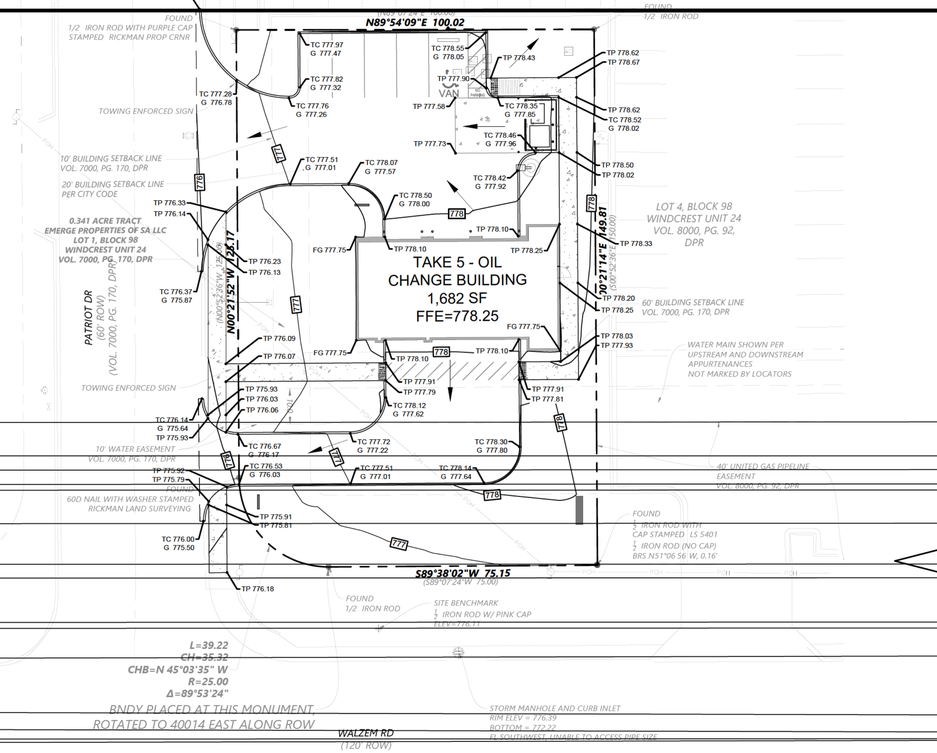

POST-DEVELOPMENT

N

0 10 20 40

SCALE 1 20

DRAINAGE PLAN LEGEND

EXIST NG PROPOSED

DRA NAGE AREA BOUNDARY

FLOW ARROW

AREA COVER TABLE	
EXISTING CONDITIONS:	
BUILD NG AREA	2,662 SF
CONCRETE PAVEMENT	465 SF
ASPHALT PAVEMENT	9,364 SF
TOTAL IMPERVIOUS PAVEMENT	12,491 SF
PERVIOUS COVER	2,380 SF
PROPOSED CONDITIONS:	
BUILD NG AREA	1,682 SF
CONCRETE PAVEMENT	6,114 SF
TOTAL IMPERVIOUS PAVEMENT	7,796 SF
PERVIOUS COVER	7,075 SF

THERE IS AN OVERALL REDUCTION IN IMPERVIOUS COVER DUE TO THE PROPOSED RE-DEVELOPMENT OF THE SITE. THE OVERALL GRADING STRATEGIES IN EXISTING AND PROPOSED CONDITIONS RESULT IN NEGLIGIBLE IMPACTS TO MINIMUM TIMES OF CONCENTRATION. NO DETENTION IS REQUIRED OR PROPOSED.

!!CAUTION!!
OVERHEAD POWER.

!CAUTION!

CONTRACTOR TO CONTACT THE TEXAS ONE-CALL SYSTEM (1-800-344-8377) AT LEAST 48 HOURS PRIOR TO COMMENCING CONSTRUCTION. ALTAR GROUP IS NOT RESPONS BLE FOR KNOWING ALL EXIST NG UTILIT ES IN THE PROJECT AREA. IF FILED CONDITIONS DIFFER SIGN FICANTLY FROM THE LOCATION SHOWN ON THE PLANS THE CONTRACTOR SHALL CONTACT THE PROJECT ENG NEER PRIOR TO PROCEEDING WITH CONSTRUCTION.

811 Know what's below. Call before you dig.

ALTAR GROUP

ARCHITECTURE
ENGINEERING

EAL

STATE OF TEXAS
SANDRA M. NADIRA
137447
LICENSED
PROFESSIONAL ENGINEER
02/21/2025

FIRM# 20340

N ULTANT

DRIVEN BRAND

TAKE IL HAN E
1 WALZEM R AD
AN ANT NI , TX 7 1

REV	DATE	DESCRIPTION
	11/27/24	ISSUE FOR SUP
	02/21/25	RE-ISSUE FOR SUP

AWN Y:
HE KE Y:
JE TN :
4–

HEET NAME:
EXISTING & PROPOSED DRAINAGE PLAN

HEET NUM E:
C-400

!!CAUTION!!
OVERHEAD POWER.

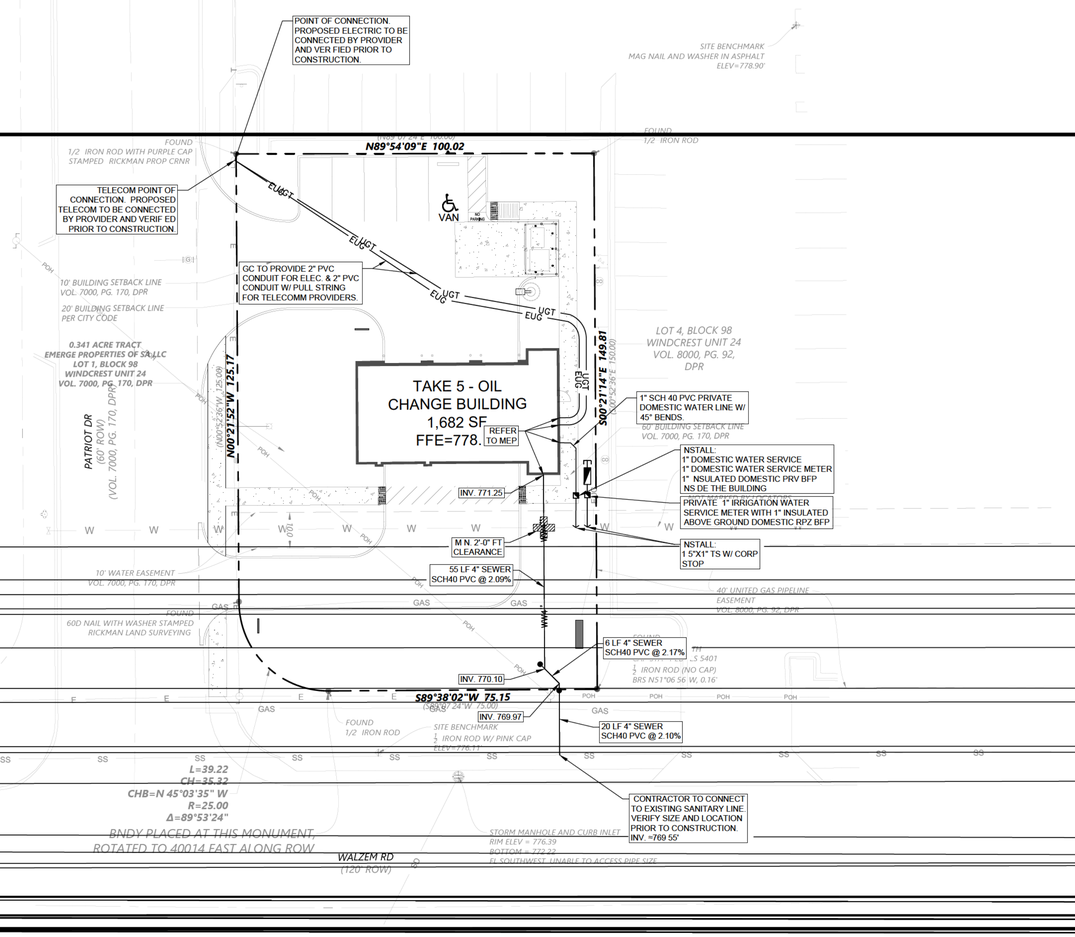

N

0 10 20 40
SCALE 1:20

UTILITY PLAN LEGEND

EXISTING	PROPOSED	DESCRIPTION
		WASTEWATER MANHOLE
		WASTEWATER CLEANOUT
WW	WW	WASTEWATER LINE
		WATER METER
		WATER VALVE
		FIRE HYDRANT
		FDC
		BACKFLOW PREVENTOR
W	W	WATERLINE
G	G	GAS METER
E	E	ELECTRIC OVERHEAD
		POWER POLE
SD	SD	STORM DRAIN
		GRATE INLET
		STORM DRAIN MANHOLE

UTILITY NOTES

1. **GENERAL CONSTRUCTION NOTES** REFER TO SHEET C-002 FOR THE GENERAL CONSTRUCTION NOTES FOR THE PROJECT.
2. **INSPECTION AND TESTING** THE CONTRACTOR SHALL COORDINATE INSPECTION AND TESTING WITH THE APPROPRIATE GOVERNING AUTHORITIES PRIOR TO BACKFILLING TRENCHES FOR ALL UTILITIES.
3. **TRENCH COMPACTION** THE CONTRACTOR SHALL BE RESPONSIBLE FOR OBTAINING COMPACTION TO A MINIMUM OF 95% STANDARD PROCTOR IN AREAS OF PROPOSED AND FUTURE PAVEMENT AND ALL AREAS EXCAVATED AT THE BUILDING FOOTINGS FOR UTILITY SERVICE ENTRIES. TRENCHES WHICH LIE OUTSIDE THESE AREAS SHALL BE COMPACTED TO A MINIMUM OF 90% STANDARD PROCTOR.
4. **CONFLICTS** THE CONTRACTOR SHALL COORDINATE INSTALLATION OF UTILITIES IN SUCH A MANNER AS TO AVOID CONFLICTS AND TO ASSURE PROPER DEPTHS ARE ACHIEVED. IN THE EVENT OF A CONFLICT BETWEEN WATER LINES AND STORM DRAIN OR SANITARY SEWER PIPING, THE CONTRACTOR SHALL ADJUST THE WATER LINE DOWNWARDS IN SUCH A MANNER SO THAT THE PIPE MANUFACTURER'S RECOMMENDATIONS ON THE PIPE DEFLECTION AND JOINT STRESS ARE NOT EXCEEDED.
5. **CONNECTION TO EXISTING UTILITIES** THE CONTRACTOR SHALL VERIFY THE SIZE, TYPE, ELEVATION, CONFIGURATION, AND ANGULATION OF EXISTING WATER, SANITARY SEWER AND UTILITY LINES PRIOR TO CONSTRUCTION OF TIE-IN MATERIALS. THE CONTRACTOR SHALL ASSUME RESPONSIBILITY FOR REPAIRS TO EXISTING FACILITIES DAMAGED BY HIS ACTIVITIES.
6. **WATER METERS** THE CONTRACTOR SHALL ACQUIRE BOTH DOMESTIC AND IRRIGATION METERS FROM THE GOVERNING AUTHORITY. THE CONTRACTOR SHALL BE RESPONSIBLE FOR HAVING METERS INSTALLED IN BOXES AND CONNECTING PUBLIC TO PRIVATE WATER LINES.
7. **PIPE COVER** TOP OF ALL WATER LINES SHALL BE INSTALLED WITH A MINIMUM COVER OF 48 INCHES.
8. **HORIZONTAL BLOCKING** HORIZONTAL BLOCKING FOR WATER LINES HAS BEEN OMITTED FOR CLARITY, HOWEVER, BLOCKING SHALL BE CONSTRUCTED IN ACCORDANCE WITH THE GOVERNING AUTHORITIES "STANDARD DETAILS".
9. **THRUST BLOCKING** THRUST BLOCKING SHALL BE CONSTRUCTED IN ACCORDANCE WITH THE GOVERNING AUTHORITIES' STANDARD DETAILS. DO NOT COVER BELLS OR FLANGES WITH CONCRETE. THE CONTRACTOR SHALL REMOVE EXISTING THRUST BLOCKING OR RESTRAINTS WHERE NECESSARY TO ALLOW THE WORK TO PROCEED AND SHALL REPLACE THE THRUST BLOCKS WHERE REQUIRED. THE COST TO REMOVE, REPLACE OR PROVIDE THRUST BLOCKING SHALL BE INCLUDED IN THE CONTRACT AMOUNT.
10. **ADDITIONAL BENDS** THE CONTRACTOR SHALL SUPPLY AND INSTALL ANY ADDITIONAL BENDS WITH THRUST BLOCKING AND OTHER APPURTENANCES REQUIRED TO ASSURE PROPER INSTALLATION OF WATER MAINS AND LATERALS. THE CONTRACTOR MAY PULL PIPE AS NEEDED AT THE BENDS WHERE THE DEFLECTION ANGLE OF THE PIPE DOES NOT MATCH THE ANGLE OF THE BEND PROVIDED. THE PIPE DEFLECTION IS WITHIN TOLERABLE MANUFACTURERS LIMITS. THE COST FOR ADDITIONAL BENDS AND BLOCKING SHALL BE INCLUDED IN THE CONTRACT AMOUNT.
11. POLYETHYLENE WRAP. ALL VALVES, DUCTILE IRON AND CAST IRON PIPE, FITTINGS AND SPECIALS SHALL BE POLYETHYLENE WRAPPED.
12. **ADJUSTMENTS** THE CONTRACTOR IS RESPONSIBLE FOR ADJUSTING ALL EXISTING MANHOLES, CLEANOUTS, VALVES, BOXES, VAULTS AND HYDRANTS TO FINAL GRADE. THE COST SHALL BE INCLUDED IN THE CONTRACT AMOUNT.
13. **APPURTENANCES** ALL VALVES AND OTHER APPURTENANCES ON ALL FIRE PROTECTION LINES SHALL BE UL/FM APPROVED. THE COST SHALL BE INCLUDED IN THE CONTRACT AMOUNT.
14. **FIRE PROTECTION WORK** ALL FIRE PROTECTION WORK MUST BE PERMITTED AND APPROVED BY THE GOVERNING AUTHORITIES FIRE DEPARTMENT. THE CONTRACTOR SHALL CONDUCT ALL REQUIRED PRESSURE TESTS ON THE FIRE PROTECTION LINES TO THE SATISFACTION OF THE FIRE MARSHALL FOR THE GOVERNING AUTHORITY AS WELL AS THE DEVELOPERS' INSURANCE CARRIER.
15. **WASTEWATER SYSTEM** ALL PIPE MATERIALS AND CONSTRUCTION METHODS SHALL BE CONSTRUCTED IN ACCORDANCE WITH TEXAS COMMISSION ON ENVIRONMENTAL QUALITY (TCEQ) CHAPTER 217 (DESIGN CRITERIA FOR DOMESTIC WASTEWATER SYSTEMS), LATEST REVISION.
    A. ALL SEWER PIPE SHALL BE SDR-26, IN ACCORDANCE WITH ASTM SPECIFICATIONS D-3034 FOR 4-INCH THROUGH 15- INCH, AND ASTM F-879 FOR 15- INCH THROUGH 27-INCH, UNLESS NOTED OTHERWISE ON UTILITY PLAN.
    B. DEFLECTION TESTS SHALL BE IN ACCORDANCE WITH TCEQ 217.57.
    C. LEAKAGE TESTS SHALL BE IN ACCORDANCE WITH TCEQ 217.57.
    D. BACKFILL SHALL BE IN ACCORDANCE WITH TCEQ 217.54.
    E. MANHOLES SHALL BE REINFORCED CONCRETE (3000 PSI) IN ACCORDANCE WITH ASTM C478. WATERTIGHT CONNECTIONS SHALL BE IN ACCORDANCE WITH TCEQ 217.55.
15. **WATER SYSTEM** ALL PIPE MATERIALS AND CONSTRUCTION METHODS SHALL BE CONSTRUCTED IN ACCORDANCE WITH TEXAS COMMISSION ON ENVIRONMENTAL QUALITY (TCEQ) CHAPTER 290, SUBCHAPTER D (RULES AND REGULATIONS FOR PUBLIC WATER SYSTEMS), LATEST REVISION.
    A. WATER MAINS 4-INCH THROUGH 12-INCH SHALL BE C-900 (DR - 18) CLASS 150.
    B. WATER MAINS 14-INCH THROUGH 36- INCH SHALL BE C-905 (DR - 25).
    C. ALL WATER SERVICES 3-INCH AND SMALLER SHALL BE TYPE K COPPER, UNLESS NOTED OTHERWISE ON UTILITY PLANS.
    D. ALL WATER LINES SHALL MEET THE REQUIREMENTS OF AWWA AND TCEQ.
    E. PRESSURE AND LEAKAGE TESTING SHALL BE IN ACCORDANCE WITH AWWA C-601.
    F. DISINFECTION PROCEDURES SHALL BE IN ACCORDANCE WITH AWWA C-651.
    G. ALL FITTINGS SHALL BE MEGA LUGS (VERTICAL BENDS ONLY).
16. **GRADING** CONTRACTOR SHALL COMPLETE EARTHWORK GRADING AND COMPACTION PRIOR TO INSTALLATION OF SANITARY SEWER LINES.
17. **STUB OUTS** CONTRACTOR SHALL STUB A PIPE STACK 24 INCHES ABOVE FINISHED GRADE AT THE TERMINATION OF ALL SANITARY SEWER SERVICES.

UTILITY CONTACTS

Sanitary Sewer	San Antonio Water System	2800 US 281, San Antonio, TX 78212	Contact: Business Center Title: Representative Ph: 210-704-7297 Email: sawater@saws.org
Storm Drainage	City of Windcrest Public works	9819 Jim Seal Drive Windcrest, TX 78239	Contact: City of Windcrest Title: Representative Ph: 210-826-0022 Email: TBD
Water	BEXAR COUNTY WCID NO 10	8881 Midcrown Dr, Windcrest, TX 78239	Contact: Business Center Title: Representative Ph: 210-826-2009 Email: bexarcountywcid10.com
Electric	CPS Energy	500 McCullough Ave San Antonio, TX 78215	Contact: Clairissa Hale Title: Customer service Ph: 210-353-7000 Email: ce@cpsenergy.com
Telephone	AT&T	5007 Parkcrest Dr Ste 101 San Antonio, TX 78218	Contact: Business Center Title: Representative Ph: 210-566-1691 Email: att.com
Gas	N/A	N/A	Contact: N/A Title: N/A Ph: N/A Email: N/A
Solid Waste Management	Republic Services	1949 Hormel Dr San Antonio, TX 78219	Contact: Business Center Title: Representative Ph: 210-566-6566 Email: utilities@windcrest-tx.gov

NOTES:
REFERENCE SHEET C-540 FOR UTILITY DETAILS

!CAUTION!

CONTRACTOR TO CONTACT THE TEXAS ONE-CALL SYSTEM (1-800-344-8377) AT LEAST 48 HOURS PRIOR TO COMMENCING CONSTRUCTION. ALTAR GROUP IS NOT RESPONSIBLE FOR KNOWING ALL EXISTING UTILITIES IN THE PROJECT AREA. IF FILED CONDITIONS DIFFER SIGNIFICANTLY FROM THE LOCATION SHOWN ON THE PLANS THE CONTRACTOR SHALL CONTACT THE PROJECT ENGINEER PRIOR TO PROCEEDING WITH CONSTRUCTION.

811 Know what's below. Call before you dig.

ALTAR GROUP
ARCHITECTURE ENGINEERING

EAL

STATE OF TEXAS
SANDRA M. NADIRA
137447
LICENSED PROFESSIONAL ENGINEER
02/21/2025
FIRM# 20340

NULTANT

DRIVEN BRAND
TAKE 5 OIL CHANGE
1 WALZEM ROAD
SAN ANTONIO, TX 78217

REV	DATE	DESCRIPTION
	11/27/24	ISSUE FOR SUP
	02/21/25	RE-ISSUE FOR SUP

DRAWN BY:
CHECKED BY:
PROJECT NO.: 4-
SHEET NAME: UTILITY PLAN
SHEET NUMBER: C-500

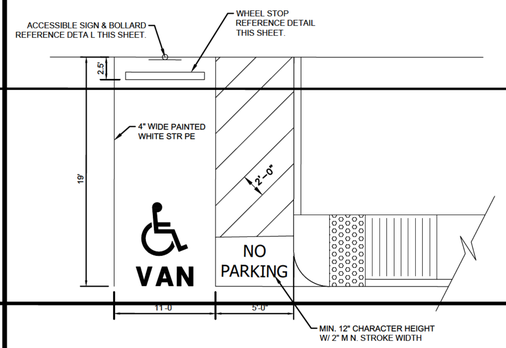

01 EMPLOYEE ACCESSIBLE VAN PARKING STRIPING

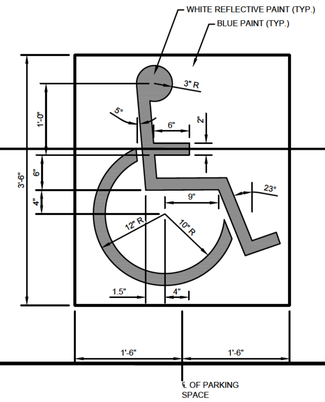

02 ACCESSIBLE PARKING LOGO

03 NOT USED

04 NOT USED

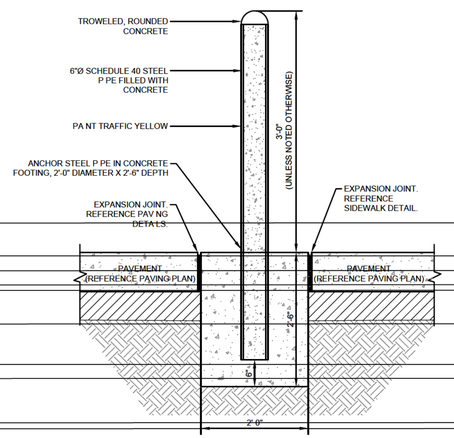

05 BOLLARD TYPE I

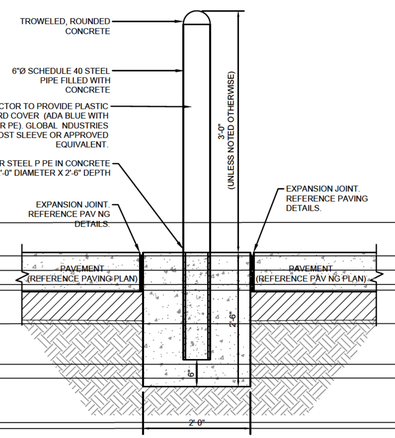

06 BOLLARD TYPE II (WITH PLASTIC CAP)

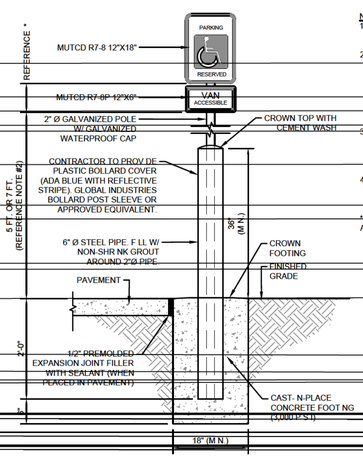

NOTE:
1. REFER TO DIMENSION CONTROL PLAN FOR PROPOSED SIGN LOCATIONS.
2. ALL ACCESSIBLE SIGNS SHALL BE MOUNTED AT A MINIMUM OF 5' FROM GRADE TO THE BOTTOM EDGE OF THE LOWEST POSTED SIGN. THE M N MUM MOUNT NG HEIGHT SHALL BE INCREASED TO 7' FROM F NISHED GRADE WHEN PLACED N A PEDESTRIAN PATHWAY.
3. SIGN AND INSTALLATION TO BE IN ACCORDANCE W/ ALL ADA, STATE AND CITY CODES. CONTRACTOR SHALL VERIFY COMPLIANCE W/ ALL CODES BEFORE FABRICATION.
4. PROV DE SIGNAGE BACK TO BACK AT LOCATIONS WITH ACCESSIBLE SPACES ON BOTH SIDES.

* PROVIDE VAN ACCESS BLE SIGN FOR ANY VAN ACCESSIBLE STALLS

07 ACCESSIBLE SIGN IN BOLLARD

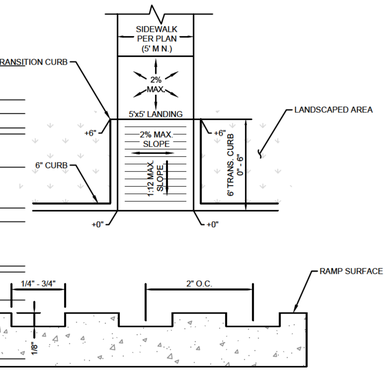

NOTES:
1. CONCRETE FOR ACCESS BLE RAMPS SHALL BE COLOR CONDITIONED WITH A COLORING ADMIXTURE 2. FOR SAFETY FOR USE N CONCRETE.
2. COLOR CONDITIONED VISUAL WARN NG AREA COLOR TO BE COORD NATED WITH OWNER.

08 RETURN CURB BARRIER FREE RAMP

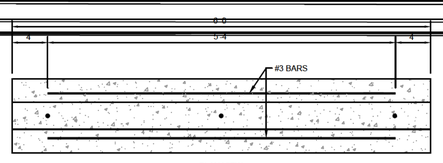

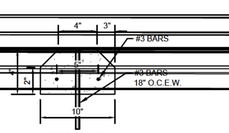

NOTE:
1. ALL CONCRETE SHALL BE CLASS 'A'.
2. INSTALL 8" LONG VERTICAL #3 REBAR DOWELS TO HOLD IN PLACE.
3. FILL TOP OF REBAR WITH GROUT.
4. WHEEL STOPS TO BE PAINTED ADA BLUE.

09 WHEEL STOP

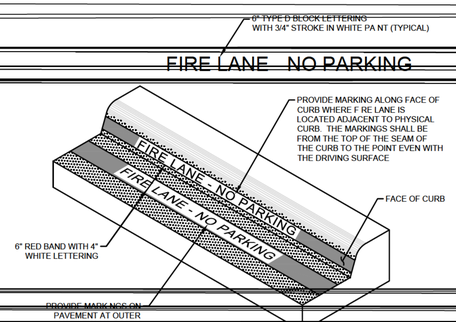

APPLICATION

1. STRIPING TO BE PERFORMED IN ACCORDANCE WITH LOCAL JURISDICTION STANDARDS.
2. SPAC NG BETWEEN THE BEGINNING OF THE WHITE LETTER NG SHALL BE N ACCORDANCE WITH LOCAL JURISDICTION STANDARDS.

10 FIRE LANE STRIPING

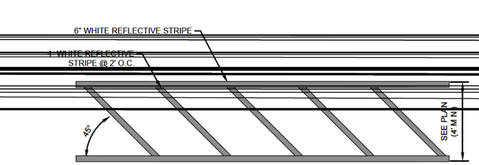

11 TYPICAL CROSSWALK

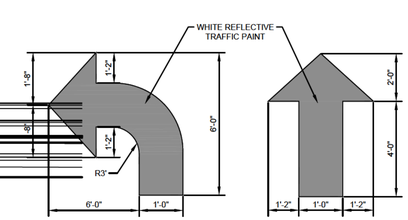

12 TRAFFIC FLOW ARROWS

ALTAR GROUP

ARCHITECTURE ENGINEERING

EAL

STATE OF TEXAS
SANDRA M. NADIRA
137447
LICENSED PROFESSIONAL ENGINEER
FIRM# 20340
02/21/2025

N ULTANT

DRIVEN BRAND

TAKE IL HAN E
1 WALZEM R AD
AN ANT NI , TX 7 1

REV	DATE	DESCRIPTION
	11/27/24	ISSUE FOR SUP
	02/21/25	RE-ISSUE FOR SUP

AWN Y:
HE KE Y:
JE T N :
4-

HEET NAME:
SITE PLAN DETAILS

HEET NUM E:
C-510

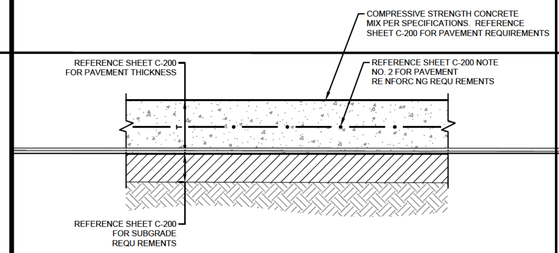

01 TYPICAL PAVEMENT SECTION

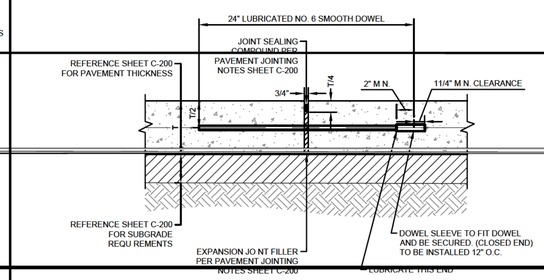

NOTE:
1. NO. 5 SMOOTH DOWEL BAR MAY BE USED N 5 INCH AND 6 INCH PAVEMENT THICKNESS.
2. LONGITUDINAL BUTT CONSTRUCTION MAY BE UT LIZED IN PLACE OF LONGITUD NAL HINGED (KEYWAY) JO NT AT CONTRACTORS OPTION.
3. DOWEL BARS SHALL BE DRILLED INTO PAVEMENT HORIZONTALLY BY USE OF A MECHANICAL EQUIPMENT.
4. DRILLING BY HAND IS NOT ACCEPTABLE, PUSHING DOWEL BARS INTO WET CONCRETE IS NOT ACCEPTABLE.

02 EXPANSION JOINT

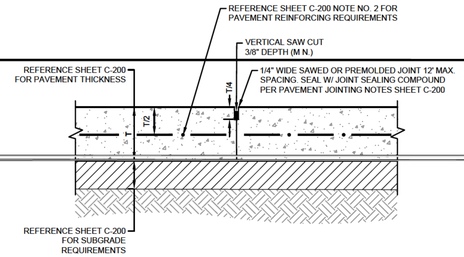

03 CONTROL JOINT

T	DOWEL DIAMETER
5"	#3 (3/8")
6"	#4 (1/2")
7"	#5 (5/8")
8"	#6 (3/4")

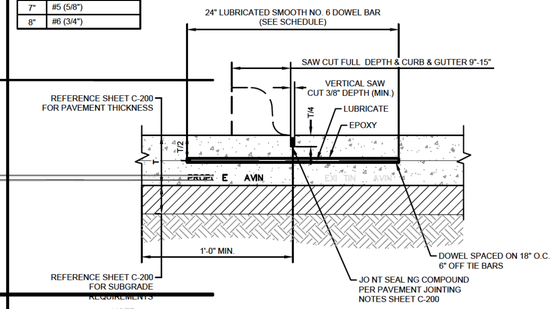

NOTE:
1. DOWELS MUST BE PERPENDICULAR TO PAVEMENT.
2. LONGITUDINAL BUTT CONSTRUCTION MAY BE UTILIZED N PLACE OF LONGITUDINAL H NGED (KEYWAY) JOINT AT CONTRACTORS OPTION.
3. DOWEL BARS SHALL BE DR LLED & EPOX ED INTO PAVEMENT HORIZONTALLY BY USE OF MECHANICAL EQUIP.
4. PUSHING DOWEL BARS NTO WET CONCRETE IS NOT ACCEPTABLE.

04 LONGITUDINAL BUTT JOINT

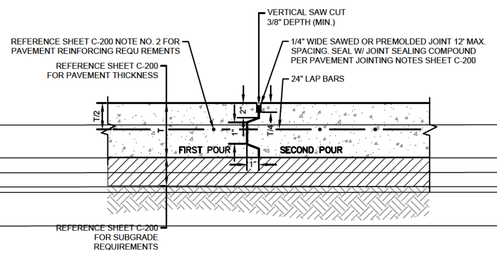

05 KEYED CONSTRUCTION JOINT

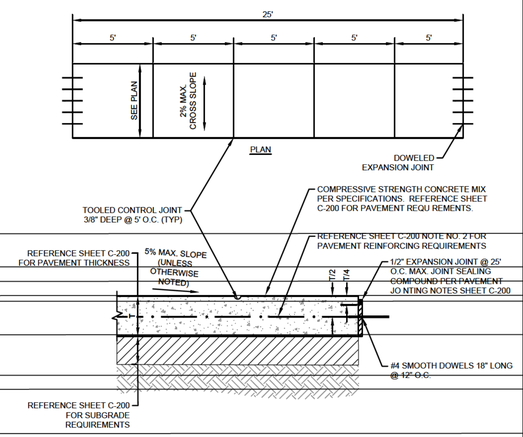

06 TYPICAL CONCRETE SIDEWALK

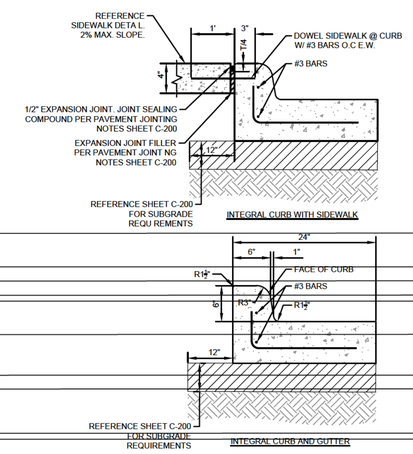

07 INTEGRAL CURB & GUTTER

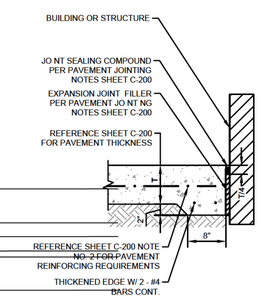

08 ISOLATION JOINT @ STRUCTURE

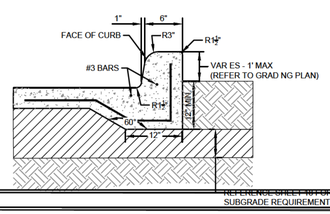

09 DROP CURB & GUTTER

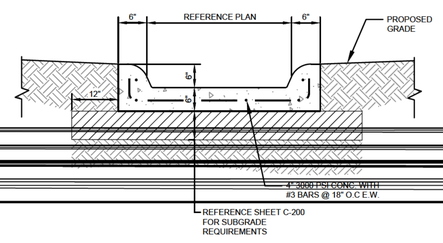

10 CONCRETE FLUME

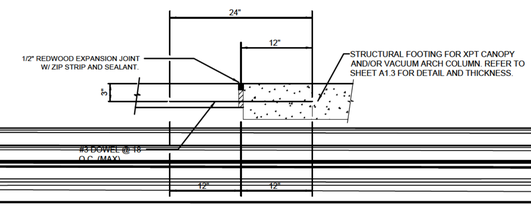

11 STRUCTURAL FOOTING PAVEMENT LEAVE OUT

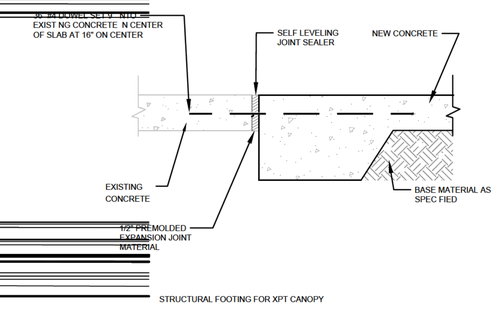

12 NEW TO EXISTING CONCRETE

ALTAR GROUP
ARCHITECTURE ENGINEERING

EAL

STATE OF TEXAS
SANDRA M. NADIRA
137447
LICENSED PROFESSIONAL ENGINEER
FIRM# 20340
02/21/2025

N ULTANT

DRIVEN BRAND
TAKE 5 OIL CHANGE
TAKE 5 OIL CHANGE
1 WALZEM R AD
AN ANT NI , TX 7 1

REV	DATE	DESCRIPTION
	11/27/24	ISSUE FOR SUP
	02/21/25	RE-ISSUE FOR SUP

AWN Y:
HE KE Y:
JE TN :
4—
HEET NAME:
PAVING PLAN DETAILS
HEET NUM E:
C-520

NOTE:
SOLVENT WELDED SLIP ON JOINTS MAY BE USED ON VERTICAL RISING SECTION OF PIPE WITH A MIN MUM OF 4" CONCRETE ENCASEMENT ON ALL SIDES.

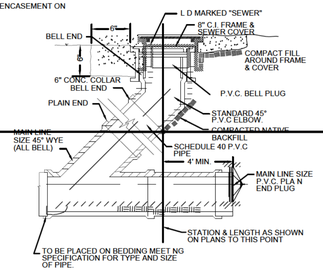

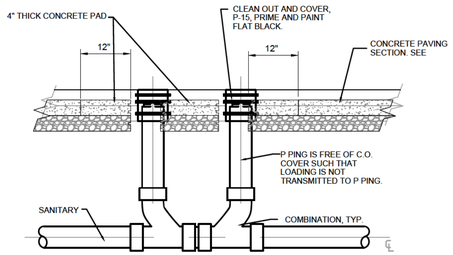

01	WASTEWATER CLEANOUT DETAIL	02	NOT USED	03	NOT USED	04	NOT USED

ALTAR GROUP

ARCHITECTURE
ENGINEERING

EAL

STATE OF TEXAS
SANDRA M. NADIRA
137447
LICENSED
PROFESSIONAL ENGINEER

FIRM# 20340

02/21/2025

N ULTANT

DRIVEN BRAND

TAKE IL HAN E
1 WALZEM R AD
AN ANT NI , TX 7 1

REV	DATE	DESCRIPTION
	11/27/24	ISSUE FOR SUP
	02/21/25	RE-ISSUE FOR SUP

AWN Y:
HE KE Y:
JE TN .:
4—

HEET NAME:
UTILITY DETAILS

HEET NUM E:
C-540

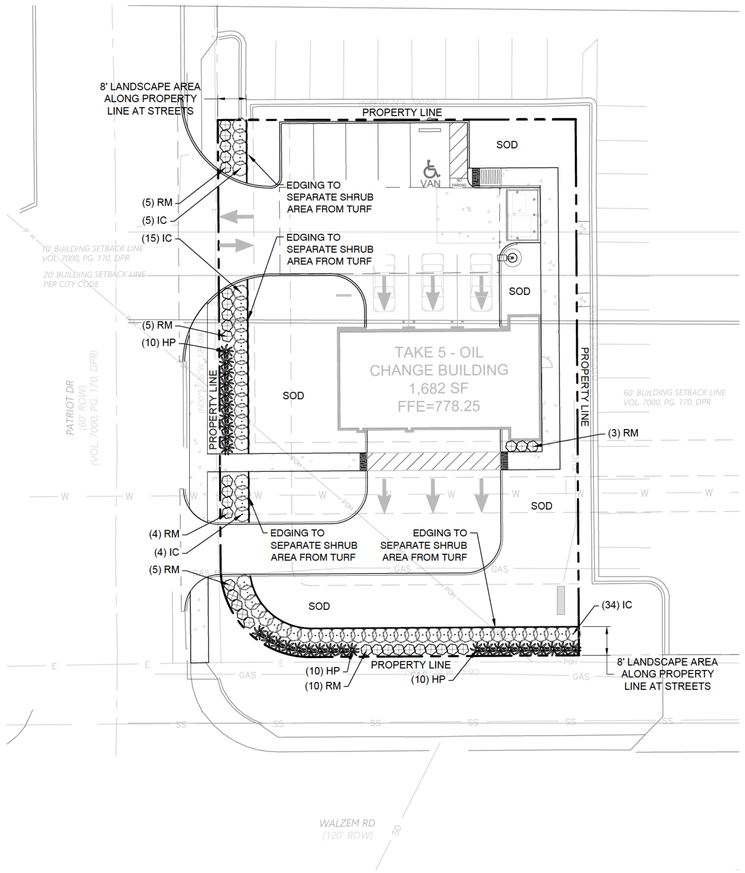

PLANT SCHEDULE

SHRUBS	CODE	COMMON / BOTANICAL NAME	SIZE	SPACING	QTY
	HP	Red Yucca / Hesperaloe parviflora	3 gal	36" o.c.	30
	IC	Dwarf Burford Holly / Ilex cornuta 'Burfordii Nana'	3 gal	36" o.c.	58
	RM	Drift Rose / Rosa meidrifora' PP 19,148	3 gal	36" o.c.	32

GROUND COVERS	CODE	COMMON / BOTANICAL NAME	SIZE	QTY
	CD	Bermuda Grass / Cynodon dactylon `Tiftuf`	sod	5,007 sf

LANDSCAPE CALCULATIONS

8' PLANTED LANDSCAPE AREA ALONG PROPERTY LINE AT STREETS - PROVIDED

MULCHES

AFTER ALL PLANTING IS COMPLETE, CONTRACTOR SHALL INSTALL 3" THICK LAYER OF 1-1/2" SHREDDED WOOD MULCH, NATURAL (UNDYED), OVER LANDSCAPE FABRIC IN ALL PLANTING AREAS (EXCEPT FOR TURF AND SEEDED AREAS). CONTRACTOR SHALL SUBMIT SAMPLES OF ALL MULCHES TO LANDSCAPE ARCHITECT AND OWNER FOR APPROVAL PRIOR TO CONSTRUCTION. ABSOLUTELY NO EXPOSED GROUND SHALL BE LEFT SHOWING ANYWHERE ON THE PROJECT AFTER MULCH HAS BEEN INSTALLED (SUBJECT TO THE CONDITIONS AND REQUIREMENTS OF THE "GENERAL GRADING AND PLANTING NOTES" AND SPECIFICATIONS).

PLANTING AND IRRIGATION GUARANTEE

THE LANDSCAPE CONTRACTOR SHALL GUARANTEE THAT ALL NEWLY INSTALLED AND EXISTING PLANTS SHALL SURVIVE FOR ONE YEAR AFTER FINAL OWNER ACCEPTANCE OF THE INSTALLATION WORK. THE CONTRACTOR SHALL ALSO BE RESPONSIBLE FOR APPROPRIATE WATERING OF THE LANDSCAPE THROUGH INSTALLATION OF A PROPERLY DESIGNED IRRIGATION SYSTEM. THE OWNER SHALL APPROVE THE SYSTEM DESIGN BEFORE INSTALLATION OF PLANTS OR IRRIGATION.

MAINTENANCE NOTES

REQUIRED PLANT/TREES MUST BE MAINTAINED IN A HEALTHY CONDITION AT ALL TIMES. THE PROPERTY OWNER IS RESPONSIBLE FOR REGULAR WEEDING, MOWING OF GRASS, IRRIGATING, FERTILIZING, PRUNING, AND OTHER MAINTENANCE OF ALL PLANTINGS AS NEEDED. ANY PLANT/TREE THAT DIES MUST BE REPLACES WITH ANOTHER LIVING PLANT THAT IS COMPATIBLE WITH THE APPROVED LANDSCAPE PLAN WITHIN SIXTY (60) DAYS AFTER NOTIFICATION BY THE BUILDING OFFICIAL. THE BUILDING OFFICIAL MAY EXTEND THIS TIME PERIOD UP TO AN ADDITIONAL THIRTY (30) DAYS DUE TO WEATHER CONSIDERATIONS. IF THE PLANTS/TREES HAVE NOT BEEN REPLACED AFTER APPROPRIATE NOTIFICATION AND/OR EXTENSION, THE LANDOWNER SHALL BE IN VIOLATION OF THIS ARTICLE.

GENERAL GRADING AND PLANTING NOTES

1. BY SUBMITTING A PROPOSAL FOR THE LANDSCAPE PLANTING SCOPE OF WORK, THE CONTRACTOR CONFIRMS THAT HE HAS READ, AND WILL COMPLY WITH, THE ASSOCIATED NOTES, SPECIFICATIONS, AND DETAILS WITH THIS PROJECT.
2. THE GENERAL CONTRACTOR IS RESPONSIBLE FOR REMOVING ALL EXISTING VEGETATION (EXCEPT WHERE NOTED TO REMAIN).
3. IN THE CONTEXT OF THESE PLANS, NOTES, AND SPECIFICATIONS, "FINISH GRADE" REFERS TO THE FINAL ELEVATION OF THE SOIL SURFACE (NOT TOP OF MULCH) AS INDICATED ON THE GRADING PLANS.
   a. BEFORE STARTING WORK, THE LANDSCAPE CONTRACTOR SHALL VERIFY THAT THE ROUGH GRADES OF ALL LANDSCAPE AREAS ARE WITHIN +/-0.1' OF FINISH GRADE. SEE SPECIFICATIONS FOR MORE DETAILED INSTRUCTION ON TURF AREA AND PLANTING BED PREPARATION.
   b. CONSTRUCT AND MAINTAIN FINISH GRADES AS SHOWN ON GRADING PLANS, AND CONSTRUCT AND MAINTAIN SLOPES AS RECOMMENDED BY THE GEOTECHNICAL REPORT. ALL LANDSCAPE AREAS SHALL HAVE POSITIVE DRAINAGE AWAY FROM STRUCTURES AT THE MINIMUM SLOPE SPECIFIED IN THE REPORT AND ON THE GRADING PLANS, AND AREAS OF POTENTIAL PONDING SHALL BE REGRADED TO BLEND IN WITH THE SURROUNDING GRADES AND ELIMINATE PONDING POTENTIAL.
   c. THE LANDSCAPE CONTRACTOR SHALL DETERMINE WHETHER OR NOT THE EXPORT OF ANY SOIL WILL BE NEEDED, TAKING INTO ACCOUNT THE ROUGH GRADE PROVIDED, THE AMOUNT OF SOIL AMENDMENTS TO BE ADDED (**BASED ON A SOIL TEST**, PER SPECIFICATIONS), AND THE FINISH GRADES TO BE ESTABLISHED.
   d. ENSURE THAT THE FINISH GRADE IN SHRUB AREAS IMMEDIATELY ADJACENT TO WALKS AND OTHER WALKING SURFACES, AFTER INSTALLING SOIL AMENDMENTS, IS 3" BELOW THE ADJACENT FINISH SURFACE, IN ORDER TO ALLOW FOR PROPER MULCH DEPTH. TAPER THE SOIL SURFACE TO MEET FINISH GRADE, AS SPECIFIED ON THE GRADING PLANS, AT APPROXIMATELY 18" AWAY FROM THE WALKS.
   e. ENSURE THAT THE FINISH GRADE IN TURF AREAS IMMEDIATELY ADJACENT TO WALKS AND OTHER WALKING SURFACES, AFTER INSTALLING SOIL AMENDMENTS, IS 1" BELOW THE FINISH SURFACE OF THE WALKS. TAPER THE SOIL SURFACE TO MEET FINISH GRADE, AS SPECIFIED ON THE GRADING PLANS, AT APPROXIMATELY 18" AWAY FROM THE WALKS.
   f. SHOULD ANY CONFLICTS AND/OR DISCREPANCIES ARISE BETWEEN THE GRADING PLANS, GEOTECHNICAL REPORT, THESE NOTES AND PLANS, AND ACTUAL CONDITIONS, THE CONTRACTOR SHALL IMMEDIATELY BRING SUCH ITEMS TO THE ATTENTION OF THE LANDSCAPE ARCHITECT, GENERAL CONTRACTOR, AND OWNER.
4. ALL PLANT LOCATIONS ARE DIAGRAMMATIC. ACTUAL LOCATIONS SHALL BE VERIFIED WITH THE LANDSCAPE ARCHITECT OR DESIGNER PRIOR TO PLANTING. THE LANDSCAPE CONTRACTOR SHALL ENSURE THAT ALL REQUIREMENTS OF THE PERMITTING AUTHORITY ARE MET (I.E., MINIMUM PLANT QUANTITIES, PLANTING METHODS, TREE PROTECTION METHODS, ETC.).
   a. THE LANDSCAPE CONTRACTOR IS RESPONSIBLE FOR DETERMINING PLANT QUANTITIES; PLANT QUANTITIES SHOWN ON LEGENDS AND CALLOUTS ARE FOR GENERAL INFORMATION ONLY. IN THE EVENT OF A DISCREPANCY BETWEEN THE PLAN AND THE PLANT LEGEND, THE PLANT QUANTITY AS SHOWN ON THE PLAN (FOR INDIVIDUAL SYMBOLS) OR CALLOUT (FOR GROUNDCOVER PATTERNS) SHALL TAKE PRECEDENCE.
   b. NO SUBSTITUTIONS OF PLANT MATERIALS SHALL BE ALLOWED WITHOUT THE WRITTEN PERMISSION OF THE LANDSCAPE ARCHITECT. IF SOME OF THE PLANTS ARE NOT AVAILABLE, THE LANDSCAPE CONTRACTOR SHALL NOTIFY THE LANDSCAPE ARCHITECT IN WRITING (VIA PROPER CHANNELS).
   c. THE CONTRACTOR SHALL, AT A MINIMUM, PROVIDE REPRESENTATIVE PHOTOS OF ALL PLANTS PROPOSED FOR THE PROJECT. THE CONTRACTOR SHALL ALLOW THE LANDSCAPE ARCHITECT AND THE OWNER/OWNER'S REPRESENTATIVE TO INSPECT, AND APPROVE OR REJECT, ALL PLANTS DELIVERED TO THE JOBSITE. REFER TO SPECIFICATIONS FOR ADDITIONAL REQUIREMENTS FOR SUBMITTALS.
5. THE CONTRACTOR SHALL MAINTAIN THE LANDSCAPE IN A HEALTHY CONDITION FOR 90 DAYS AFTER ACCEPTANCE BY THE OWNER. REFER TO SPECIFICATIONS FOR CONDITIONS OF ACCEPTANCE FOR THE START OF THE MAINTENANCE PERIOD, AND FOR FINAL ACCEPTANCE AT THE END OF THE MAINTENANCE PERIOD.
6. THE TURF BOUNDARY SHOWN ON THESE PLANS HAS BEEN ESTIMATED BASED ON THE CURRENT PROJECT INFORMATION. CONTRACTOR SHALL ADJUST THE LIMITS OF TURF TO COVER ALL DISTURBED AREAS DURING CONSTRUCTION.
7. SEE SPECIFICATIONS AND DETAILS FOR FURTHER REQUIREMENTS.

NORTH

0' 10' 20' 40'

Scale 1" = 20'

NOTE: PRINTED DRAWING SIZE MAY HAVE CHANGED FROM ORIGINAL. VERIFY SCALE USING BAR SCALE ABOVE.

CONTRACTOR TO VERIFY ELEVATION AND LOCATION OF ALL EXISTING UTILITIES PRIOR TO COMMENCEMENT OF ANY NEW CONSTRUCTION

TEXAS811 NOTIFICATION SYSTEM
CALL BEFORE YOU DIG!!!
www.texas811.org
Texas811 or 1-800-545-6005

National Presence. Local Expertise.
EVERGREEN DESIGN GROUP
800.880.6830
www.evergreendesigngroup.com
LANDSCAPE ARCHITECTURE
LAND PLANNING · IRRIGATION DESIGN

ALTAR GROUP
ARCHITECTURE
ENGINEERING

SEAL

REGISTERED LANDSCAPE ARCHITECT
STEPHEN W. SALES
3470
STATE OF TEXAS
02/21/2025

CONSULTANT

TAKE 5 OIL CHANGE
PROTOTYPE: 3 BAY
5331 WALZEM ROAD
SAN ANTONIO, TX 78218

REV	DATE	DESCRIPTION
1	11/26/24	ISSUE FOR PERMIT
2	2/21/25	RE-ISSUE FOR PERMIT

DRAWN BY: JK
CHECKED BY: SS
ARCH. PROJECT NO.: DB24-023
SHEET NAME: LANDSCAPE PLAN
SHEET NUMBER: LP-1

PLANTING SPECIFICATIONS

GENERAL

A. QUAL FICATIONS OF LANDSCAPE CONTRACTOR
1. ALL LANDSCAPE WORK SHOWN ON THESE PLANS SHALL BE PERFORMED BY A S NGLE FIRM SPECIALIZ NG IN LANDSCAPE PLANT NG.
2. A LIST OF SUCCESSFULLY COMPLETED PROJECTS OF THIS TYPE, SIZE AND NATURE MAY BE REQUESTED BY THE OWNER FOR FURTHER QUAL FICATION MEASURES.
3. THE LANDSCAPE CONTRACTOR SHALL HOLD A VALID NURSERY AND FLORAL CERT FICATE ISSUED BY THE TEXAS DEPARTMENT OF AGRICULTURE, AS WELL AS OPERATE UNDER A COMMERCIAL PESTICIDE APPLICATOR LICENSE ISSUED BY EITHER THE TEXAS DEPARTMENT OF AGRICULTURE OR THE TEXAS STRUCTURAL PEST CONTROL BOARD.
3. THE LANDSCAPE CONTRACTOR SHALL HOLD A VALID CONTRACTOR'S LICENSE ISSUED BY THE APPROPRIATE LOCAL JURISDICTION.

B. SCOPE OF WORK
1. WORK COVERED BY THESE SECTIONS NCLUDES THE FURNISH NG AND PAYMENT OF ALL MATERIALS, LABOR, SERVICES, EQU PMENT, LICENSES, TAXES AND ANY OTHER ITEMS THAT ARE NECESSARY FOR THE EXECUTION, INSTALLATION AND COMPLETION OF ALL WORK, SPECIFIED HERE N AND / OR SHOWN ON THE LANDSCAPE PLANS, NOTES, AND DETAILS.
2. ALL WORK SHALL BE PERFORMED IN ACCORDANCE WITH ALL APPLICABLE LAWS, CODES AND REGULATIONS REQU RED BY AUTHORITIES HAVING JURISDICTION OVER SUCH WORK, NCLUD NG ALL INSPECTIONS AND PERMITS REQUIRED BY FEDERAL, STATE AND LOCAL AUTHORITIES IN SUPPLY, TRANSPORTATION AND INSTALLATION OF MATERIALS.
3. THE LANDSCAPE CONTRACTOR SHALL VERIFY THE LOCATION OF ALL UNDERGROUND UT LITY LINES (WATER, SEWER, ELECTRICAL, TELEPHONE, GAS, CABLE, TELEVISION, ETC.) PRIOR TO THE START OF ANY WORK.

PRODUCTS

A. ALL MANUFACTURED PRODUCTS SHALL BE NEW.

B. CONTAINER AND BALLED-AND-BURLAPPED PLANTS:
1. FURNISH NURSERY-GROWN PLANTS COMPLY NG WITH ANSI Z60.1-2014. PROV DE WELL-SHAPED, FULLY BRANCHED, HEALTHY, VIGOROUS STOCK FREE OF DISEASE, INSECTS, EGGS, LARVAE, AND DEFECTS SUCH AS KNOTS, SUN SCALD, INJUR ES, ABRASIONS, AND DISFIGUREMENT. ALL PLANTS WITHIN A SPEC ES SHALL HAVE SIM LAR SIZE, AND SHALL BE OF A FORM TYPICAL FOR THE SPECIES. ALL TREES SHALL BE OBTAINED FROM SOURCES WITH N 200 M LES OF THE PROJECT SITE, AND WITH S MILAR CL MACTIC CONDITIONS.
2. ROOT SYSTEMS SHALL BE HEALTHY, DENSELY BRANCHED ROOT SYSTEMS, NON-POT-BOUND, FREE FROM ENCIRCLING AND/OR GIRDLING ROOTS, AND FREE FROM ANY OTHER ROOT DEFECTS (SUCH AS J-SHAPED ROOTS).
3. TREES MAY BE PLANTED FROM CONTA NERS OR BALLED-AND-BURLAPPED (B&B), UNLESS SPEC F ED ON THE PLANT NG LEGEND. BARE-ROOT TREES ARE NOT ACCEPTABLE.
4. ANY PLANT DEEMED UNACCEPTABLE BY THE LANDSCAPE ARCHITECT OR OWNER SHALL BE MMEDIATELY REMOVED FROM THE SITE AND SHALL BE REPLACED WITH AN ACCEPTBLE PLANT OF LIKE TYPE AND SIZE AT THE CONTRACTOR'S OWN EXPENSE. ANY PLANTS APPEAR NG TO BE UNHEALTHY, EVEN F DETERM NED TO ST LL BE ALIVE, SHALL NOT BE ACCEPTED. THE LANDSCAPE ARCHITECT AND OWNER SHALL BE THE SOLE JUDGES AS TO THE ACCEPTABILITY OF PLANT MATERIAL.
5. ALL TREES SHALL BE STANDARD IN FORM, UNLESS OTHERWISE SPEC F ED. TREES WITH CENTRAL LEADERS WILL NOT BE ACCEPTED F LEADER IS DAMAGED OR REMOVED. PRUNE ALL DAMAGED TWIGS AFTER PLANT NG.
6. CAL PER MEASUREMENTS FOR STANDARD (SINGLE TRUNK) TREES SHALL BE AS FOLLOWS: SIX NCHES ABOVE THE ROOT FLARE FOR TREES UP TO AND NCLUD NG FOUR INCHES N CALIPER, AND TWELVE NCHES ABOVE THE ROOT FLARE FOR TREES EXCEED NG FOUR NCHES N CALIPER.
7. MULTI-TRUNK TREES SHALL BE MEASURED BY THEIR OVERALL HEIGHT, MEASURED FROM THE TOP OF THE ROOT BALL. WHERE CAL PER MEASUREMENTS ARE USED, THE CALIPER SHALL BE CALCULATED AS ONE-HALF OF THE SUM OF THE CALIPER OF THE THREE LARGEST TRUNKS.
8. ANY TREE OR SHRUB SHOWN TO HAVE EXCESS SOIL PLACED ON TOP OF THE ROOT BALL, SO THAT THE ROOT FLARE HAS BEEN COMPLETELY COVERED, SHALL BE REJECTED.

C. SOD: PROV DE WELL-ROOTED SOD OF THE VARIETY NOTED ON THE PLANS. SOD SHALL BE CUT FROM HEALTHY, MATURE TURF WITH SOIL THICKNESS OF 3/4" TO 1". EACH PALLET OF SOD SHALL BE ACCOMPANIED BY A CERT FICATE FROM SUPPL ER STATING THE COMPOSITION OF THE SOD.

D. SEED: PROV DE BLEND OF SPECIES AND VARIET ES AS NOTED ON THE PLANS, WITH MAXIMUM PERCENTAGES OF PURITY, GERM NATION, AND M NIMUM PERCENTAGE OF WEED SEED AS INDICATED ON PLANS. EACH BAG OF SEED SHALL BE ACCOMPAN ED BY A TAG FROM THE SUPPLIER INDICAT NG THE COMPOSITION OF THE SEED.

E. TOPSOIL: SANDY TO CLAY LOAM TOPSO L, FREE OF STONES LARGER THAN ½ INCH, FOREIGN MATTER, PLANTS, ROOTS, AND SEEDS.

F. COMPOST: WELL-COMPOSTED, STABLE, AND WEED-FREE ORGANIC MATTER, pH RANGE OF 5.5 TO 8; MOISTURE CONTENT 35 TO 55 PERCENT BY WEIGHT; 100 PERCENT PASS NG THROUGH 3/4-INCH SIEVE; SOLUBLE SALT CONTENT OF 5 TO 10 DECIS EMENS/M; NOT EXCEED NG 0 5 PERCENT NERT CONTAM NANTS AND FREE OF SUBSTANCES TOXIC TO PLANTINGS. NO MANURE OR AN MAL-BASED PRODUCTS SHALL BE USED.

G. PLANT NG MIX FOR POTS: AN EQUAL PART MIXTURE OF TOPSOIL, SAND AND COMPOST. INCORPORATE "GELSCAPE", AS MADE BY AMEREQ, NC., (800) 832-8788, AT THE RATE OF 3 LB. PER CUBIC YARD OF PLANT NG MIX.

H. FERTILIZER: GRANULAR FERTILIZER CONSIST NG OF NITROGEN, PHOSPHORUS, POTASSIUM, AND OTHER NUTRIENTS N PROPORTIONS, AMOUNTS, AND RELEASE RATES RECOMMENDED N A SOIL REPORT FROM A QUAL FIED SOIL-TESTING AGENCY (SEE BELOW).

I. PALM MA NTENANCE SP KES: AS MANUFACTURED BY THE LUTZ CORP, (800) 203-7740, OR APPROVED EQUAL.

J. MULCH: SIZE AND TYPE AS NDICATED ON PLANS, FREE FROM DELETERIOUS MATERIALS AND SUITABLE AS A TOP DRESS NG OF TREES AND SHRUBS.

K. TREE STAKING AND GUYING
1. STAKES: 6' LONG GREEN METAL T-POSTS.
2. GUY AND T E W RE: ASTM A 641, CLASS 1, GALVANIZED-STEEL WIRE, 2-STRAND, TWISTED, 0.106 NCH DIAMETER.
3. STRAP CHAFING GUARD: REINFORCED NYLON OR CANVAS AT LEAST 1-1/2 INCH W DE, WITH GROMMETS TO PROTECT TREE TRUNKS FROM DAMAGE.

L. STEEL EDGING: PROFESSIONAL STEEL EDGING, 14 GAUGE THICK X 4 INCHES WIDE, FACTORY PAINTED DARK GREEN. ACCEPTABLE MANUFACTURERS NCLUDE COL-MET OR APPROVED EQUAL.

M. PRE-EMERGENT HERBIC DES: ANY GRANULAR, NON-STAIN NG PRE-EMERGENT HERBIC DE THAT IS LABELED FOR THE SPECIFIC ORNAMENTALS OR TURF ON WHICH IT WILL BE UTILIZED. PRE-EMERGENT HERBICIDES SHALL BE APPLIED PER THE MANUFACTURER'S LABELED RATES.

METHODS

A. SO L PREPARATION
1. BEFORE STARTING WORK, THE LANDSCAPE CONTRACTOR SHALL VER FY THAT THE GRADE OF ALL LANDSCAPE AREAS ARE WITH N +/-0.1' OF FINISH GRADE. THE CONTRACTOR SHALL NOTIFY THE OWNER MMEDIATELY SHOULD ANY DISCREPANCIES EXIST.
2. SO L TEST NG:
   a. AFTER FINISH GRADES HAVE BEEN ESTABLISHED, CONTRACTOR SHALL HAVE SOIL SAMPLES FROM THE PROJECT'S LANDSCAPE AREAS TESTED BY AN ESTABLISHED SOIL TEST NG LABORATORY. EACH SAMPLE SUBMITTED TO THE LAB SHALL CONTAIN NO LESS THAN ONE QUART OF SO L, TAKEN FROM BETWEEN THE SOIL SURFACE AND 6" DEPTH. IF NO SAMPLE LOCATIONS ARE INDICATED ON THE PLANS, THE CONTRACTOR SHALL TAKE A M NIMUM OF THREE SAMPLES FROM VARIOUS REPRESENTATIVE LOCATIONS FOR TESTING.
   b. THE CONTRACTOR SHALL HAVE THE SOIL TEST NG LABORATORY PROV DE RESULTS FOR THE FOLLOW NG: SOIL TEXTURAL CLASS, GENERAL SOIL FERTILITY, pH, ORGANIC MATTER CONTENT, SALT (CEC), L ME, SODIUM ADSORPTION RATIO (SAR) AND BORON CONTENT.
   c. THE CONTRACTOR SHALL ALSO SUBMIT THE PROJECT'S PLANT LIST TO THE LABORATORY ALONG WITH THE SOIL SAMPLES.
   d. THE SO L REPORT PRODUCED BY THE LABORATORY SHALL CONTAIN RECOMMENDATIONS FOR THE FOLLOW NG (AS APPROPRIATE): SEPARATE SO L PREPARATION AND BACKF LL MIX RECOMMENDATIONS FOR GENERAL ORNAMENTAL PLANTS, XERIC PLANTS, TURF, AND NATIVE SEED, AS WELL AS PRE-PLANT FERTILIZER APPLICATIONS AND RECOMMENDATIONS FOR ANY OTHER SOIL RELATED ISSUES. THE REPORT SHALL ALSO PROV DE A FERT LIZER PROGRAM FOR THE ESTABLISHMENT PERIOD AND FOR LONG-TERM MA NTENANCE.
3. THE CONTRACTOR SHALL NSTALL SO L AMENDMENTS AND FERTILIZERS PER THE SOILS REPORT RECOMMENDATIONS. ANY CHANGE N COST DUE TO THE SOIL REPORT RECOMMENDATIONS, EITHER INCREASE OR DECREASE, SHALL BE SUBMITTED TO THE OWNER WITH THE REPORT.
4. FOR B DD NG PURPOSES ONLY, THE SO L PREPARATION SHALL CONSIST OF THE FOLLOW NG:
   a. TURF: NCORPORATE THE FOLLOWING AMENDMENTS NTO THE TOP 8" OF SOIL BY MEANS OF ROTOT LLING AFTER CROSS-RIPPING:
      i. NITROGEN STABILIZED ORGANIC AMENDMENT - 4 CU. YDS. PER 1,000 S.F.
      ii. PREPLANT TURF FERT LIZER (10-20-10 OR S MILAR, SLOW RELEASE, ORGANIC) - 15 LBS PER 1,000 S.F.
      iii. "CLAY BUSTER" OR EQUAL - USE MANUFACTURER'S RECOMMENDED RATE
   b. TREES, SHRUBS, AND PERENNIALS: INCORPORATE THE FOLLOW NG AMENDMENTS INTO THE TOP 8" OF SOIL BY MEANS OF ROTOTILLING AFTER CROSS-RIPPING:
      i. NITROGEN STABILIZED ORGANIC AMENDMENT - 4 CU. YDS. PER 1,000 S.F.
      ii. 12-12-12 FERT LIZER (OR SIM LAR, ORGANIC, SLOW RELEASE) - 10 LBS. PER CU. YD.
      iii. "CLAY BUSTER" OR EQUAL - USE MANUFACTURER'S RECOMMENDED RATE
      iv. RON SULPHATE - 2 LBS. PER CU. YD.
5. IN THE CONTEXT OF THESE PLANS, NOTES, AND SPEC FICATIONS, "F NISH GRADE" REFERS TO THE F NAL ELEVATION OF THE SOIL SURFACE (NOT TOP OF MULCH) AS INDICATED ON THE GRADING PLANS.
   a. BEFORE START NG WORK, THE LANDSCAPE CONTRACTOR SHALL VER FY THAT THE ROUGH GRADES OF ALL LANDSCAPE AREAS ARE WITHIN +/-0.1' OF FINISH GRADE. SEE SPECIFICATIONS FOR MORE DETA LED NSTRUCTION ON TURF AREA AND PLANTING BED PREPARATION.
   b. CONSTRUCT AND MAINTA N FINISH GRADES AS SHOWN ON GRAD NG PLANS, AND CONSTRUCT AND MAINTAIN SLOPES AS RECOMMENDED BY THE GEOTECHNICAL REPORT. ALL LANDSCAPE AREAS SHALL HAVE POSITIVE DRAINAGE AWAY FROM STRUCTURES AT THE MIN MUM SLOPE SPECIFIED IN THE REPORT AND ON THE GRAD NG PLANS, AND AREAS OF POTENTIAL POND NG SHALL BE REGRADED TO BLEND IN WITH THE SURROUND NG GRADES AND ELIMINATE PONDING POTENTIAL.
   c. THE LANDSCAPE CONTRACTOR SHALL DETERMINE WHETHER OR NOT THE EXPORT OF ANY SO L WILL BE NEEDED, TAK NG INTO ACCOUNT THE ROUGH GRADE PROV DED, THE AMOUNT OF SOIL AMENDMENTS TO BE ADDED (**BASED ON A SOIL TEST**, PER SPECIFICATIONS), AND THE FINISH GRADES TO BE ESTABLISHED.
   d. ENSURE THAT THE FINISH GRADE IN SHRUB AREAS IMMEDIATELY ADJACENT TO WALKS AND OTHER WALKING SURFACES, AFTER NSTALL NG SO L AMENDMENTS, IS 3" BELOW THE ADJACENT F NISH SURFACE, IN ORDER TO ALLOW FOR PROPER MULCH DEPTH. TAPER THE SOIL SURFACE TO MEET F NISH GRADE, AS SPEC F ED ON THE GRADING PLANS, AT APPROX MATELY 18" AWAY FROM THE WALKS.
   e. ENSURE THAT THE FINISH GRADE IN TURF AREAS MMEDIATELY ADJACENT TO WALKS AND OTHER WALKING SURFACES, AFTER NSTALL NG SO L AMENDMENTS, IS 1" BELOW THE F NISH SURFACE OF THE WALKS. TAPER THE SO L SURFACE TO MEET FINISH GRADE, AS SPEC F ED ON THE GRADING PLANS, AT APPROX MATELY 18" AWAY FROM THE WALKS.
   f. SHOULD ANY CONFLICTS AND/OR DISCREPANC ES ARISE BETWEEN THE GRAD NG PLANS, GEOTECHNICAL REPORT, THESE NOTES AND PLANS, AND ACTUAL CONDITIONS, THE CONTRACTOR SHALL MMEDIATELY BRING SUCH ITEMS TO THE ATTENTION OF THE LANDSCAPE ARCHITECT, GENERAL CONTRACTOR, AND OWNER.
6. ONCE SOIL PREPARATION IS COMPLETE, THE LANDSCAPE CONTRACTOR SHALL ENSURE THAT THERE ARE NO DEBRIS, TRASH, OR STONES LARGER THAN 1" REMA NING IN THE TOP 6" OF SO L.

B. SUBMITTALS
1. THE CONTRACTOR SHALL PROV DE SUBMITTALS AND SAMPLES, IF REQUIRED, TO THE LANDSCAPE ARCHITECT, AND RECEIVE APPROVAL IN WRIT NG FOR SUCH SUBMITTALS BEFORE WORK COMMENCES.
2. SUBMITTALS SHALL NCLUDE PHOTOS OF PLANTS WITH A RULER OR MEASURING STICK FOR SCALE, PHOTOS OR SAMPLES OF ANY REQUIRED MULCHES, AND SOIL TEST RESULTS AND PREPARATION RECOMMENDATIONS FROM THE TEST NG LAB (INCLUDING COMPOST AND FERT LIZER RATES AND TYPES, AND OTHER AMENDMENTS FOR TREE/SHRUB, TURF, AND SEED AREAS AS MAY BE APPROPRIATE).
3. SUBMITTALS SHALL ALSO INCLUDE MANUFACTURER CUT SHEETS FOR PLANT NG ACCESSORIES SUCH AS TREE STAKES AND T ES, EDGING, AND LANDSCAPE FABRICS (F ANY).
4. WHERE MULT PLE ITEMS ARE SHOWN ON A PAGE, THE CONTRACTOR SHALL CLEARLY INDICATE THE ITEM BE NG CONSIDERED.

C. GENERAL PLANTING
1. REMOVE ALL NURSERY TAGS AND STAKES FROM PLANTS.
2. EXCEPT IN AREAS TO BE PLANTED WITH ORNAMENTAL GRASSES, APPLY PRE-EMERGENT HERBICIDES AT THE MANUFACTURER'S RECOMMENDED RATE.
3. TRENCHING NEAR EXIST NG TREES:
   a. CONTRACTOR SHALL NOT DISTURB ROOTS 1-1/2" AND LARGER N DIAMETER WITHIN THE CRITICAL ROOT ZONE (CRZ) OF EXIST NG TREES, AND SHALL EXERCISE ALL POSSIBLE CARE AND PRECAUTIONS TO AVOID NJURY TO TREE ROOTS, TRUNKS, AND BRANCHES. THE CRZ IS DEFINED AS A CIRCULAR AREA EXTEND NG OUTWARD FROM THE TREE TRUNK, WITH A RADIUS EQUAL TO 1' FOR EVERY 1" OF TRUNK DIAMETER-AT-BREAST-HEIGHT (4.5' ABOVE THE AVERAGE GRADE AT THE TRUNK).
   b. ALL EXCAVATION WITHIN THE CRZ SHALL BE PERFORMED US NG HAND TOOLS. NO MACH NE EXCAVATION OR TRENCH NG OF ANY K ND SHALL BE ALLOWED WITHIN THE CRZ.
   c. ALTER ALIGNMENT OF P PE TO AVO D TREE ROOTS 1-1/2" AND LARGER IN DIAMETER. WHERE TREE ROOTS 1-1/2" AND LARGER IN DIAMETER ARE ENCOUNTERED IN THE F ELD, TUNNEL UNDER SUCH ROOTS. WRAP EXPOSED ROOTS WITH SEVERAL LAYERS OF BURLAP AND KEEP MOIST. CLOSE ALL TRENCHES WITH N THE CANOPY DRIP L NES WITH N 24 HOURS.
   d. ALL SEVERED ROOTS SHALL BE HAND PRUNED WITH SHARP TOOLS AND ALLOWED TO A R-DRY. DO NOT USE ANY SORT OF SEALERS OR WOUND PA NTS.

D. TREE PLANTING
1. TREE PLANTING HOLES SHALL BE EXCAVATED TO M NIMUM W DTH OF TWO T MES THE W DTH OF THE ROOTBALL, AND TO A DEPTH EQUAL TO THE DEPTH OF THE ROOTBALL LESS TWO TO FOUR NCHES.
2. SCARIFY THE S DES AND BOTTOM OF THE PLANTING HOLE PRIOR TO THE PLACEMENT OF THE TREE. REMOVE ANY GLAZING THAT MAY HAVE BEEN CAUSED DUR NG THE EXCAVATION OF THE HOLE.
3. FOR CONTAINER AND BOX TREES, TO REMOVE ANY POTENTIALLY GIRDLING ROOTS AND OTHER ROOT DEFECTS, THE CONTRACTOR SHALL SHAVE A 1" LAYER OFF OF THE S DES AND BOTTOM OF THE ROOTBALL OF ALL TREES JUST BEFORE PLACING NTO THE PLANTING PIT. DO NOT "TEASE" ROOTS OUT FROM THE ROOTBALL.
4. INSTALL THE TREE ON UNDISTURBED SUBGRADE SO THAT THE TOP OF THE ROOTBALL IS TWO TO FOUR NCHES ABOVE THE SURROUND NG GRADE.
5. BACKFILL THE TREE HOLE UT LIZ NG THE EXISTING TOPSO L FROM ON-SITE. ROCKS LARGER THAN 1" DIA. AND ALL OTHER DEBRIS SHALL BE REMOVED FROM THE SO L PRIOR TO THE BACKFILL. SHOULD ADDITIONAL SO L BE REQU RED TO ACCOMPLISH THIS TASK, USE STORED TOPSO L FROM ON-SITE OR IMPORT ADDITIONAL TOPSOIL FROM OFF-SITE AT NO ADDITIONAL COST TO THE OWNER. MPORTED TOPSOIL SHALL BE OF SIMILAR TEXTURAL CLASS AND COMPOSITION IN THE ON-SITE SO L.
6. TREES SHALL NOT BE STAKED UNLESS LOCAL CONDITIONS (SUCH AS HEAVY WINDS OR SLOPES) REQUIRE STAKES TO KEEP TREES UPRIGHT. SHOULD STAK NG BE REQUIRED, THE TOTAL NUMBER OF TREE STAKES (BEYOND THE MIN MUMS LISTED BELOW) WILL BE LEFT TO THE LANDSCAPE CONTRACTOR'S DISCRETION. SHOULD ANY TREES FALL OR LEAN, THE LANDSCAPE CONTRACTOR SHALL STRAIGHTEN THE TREE, OR REPLACE IT SHOULD IT BECOME DAMAGED. TREE STAKING SHALL ADHERE TO THE FOLLOW NG GU DELINES:
   a. 1"-2" TREES — TWO STAKES PER TREE
   b. 2-1/2"-4" TREES — THREE STAKES PER TREE
   c. TREES OVER 4" CAL PER — GUY AS NEEDED
   d. MULTI-TRUNK TREES — THREE STAKES PER TREE M NIMUM, QUANTITY AND POSITIONS AS NEEDED TO STAB LIZE THE TREE
   e. #15 CONT. - 24" BOX TREES — TWO STAKES PER TREE
   f. 36"-48" BOX TREES — THREE STAKES PER TREE
   g. OVER 48" BOX TREES — GUY AS NEEDED
   h. MULTI-TRUNK TREES — THREE STAKES PER TREE M NIMUM, QUANTITY AND POSITIONS AS NEEDED TO STAB LIZE THE TREE
7. UPON COMPLETION OF PLANTING, CONSTRUCT AN EARTH WATERING BASIN AROUND THE TREE. COVER THE INTERIOR OF THE TREE RING WITH THE WEED BARRIER CLOTH AND TOPDRESS WITH MULCH (TYPE AND DEPTH PER PLANS).

E. SHRUB, PERENNIAL, AND GROUNDCOVER PLANTING
1. DIG THE PLANT NG HOLES TWICE AS WIDE AND 2" LESS DEEP THAN EACH PLANT'S ROOTBALL. NSTALL THE PLANT IN THE HOLE. BACKFILL AROUND THE PLANT WITH SO L AMENDED PER SOIL TEST RECOMMENDATIONS.
2. INSTALL THE WEED BARRIER CLOTH, OVERLAPP NG IT AT THE ENDS. UTILIZE STEEL STAPLES TO KEEP THE WEED BARRIER CLOTH IN PLACE.
3. WHEN PLANT NG IS COMPLETE, NSTALL MULCH (TYPE AND DEPTH PER PLANS) OVER ALL PLANT NG BEDS, COVER NG THE ENT RE PLANT NG AREA.

F. SODD NG
1. SOD VARIETY TO BE AS SPECIFIED ON THE LANDSCAPE PLAN.
2. LAY SOD WITHIN 24 HOURS FROM THE T ME OF STRIPPING. DO NOT LAY F THE GROUND IS FROZEN.
3. LAY THE SOD TO FORM A SOLID MASS WITH TIGHTLY FITTED JOINTS. BUTT ENDS AND S DES OF SOD STRIPS - DO NOT OVERLAP. STAGGER STRIPS TO OFFSET JOINTS N ADJACENT COURSES.
4. ROLL THE SOD TO ENSURE GOOD CONTACT OF THE SOD'S ROOT SYSTEM WITH THE SO L UNDERNEATH.
5. WATER THE SOD THOROUGHLY WITH A FINE SPRAY MMEDIATELY AFTER PLANT NG TO OBTA N AT LEAST SIX INCHES OF PENETRATION NTO THE SO L BELOW THE SOD.

G. HYDROMULCH NG
1. TURF HYDROMULCH MIX (PER 1,000 SF) SHALL BE AS FOLLOWS:
   a. WINTER MIX (OCTOBER 1 - MARCH 31)
      50# CELLULOSE FIBER MULCH
      2# UNHULLED BERMUDA SEED
      2# ANNUAL RYE SEED
      15# 15-15-15 WATER SOLUBLE FERTILIZER
   b. SUMMER MIX (APR L 1 - SEPTEMBER 30)
      50# CELLULOSE FIBER MULCH
      2# HULLED BERMUDA SEED
      15# 15-15-15 WATER SOLUBLE FERTILIZER
2. SEED HYDROMULCH MIX (PER 1,000 SF) SHALL BE AS FOLLOWS:
   a. GENERAL
      50# CELLULOSE FIBER MULCH
      15# 15-15-15 WATER SOLUBLE FERTILIZER
      SEED RATE PER LEGEND

H. DRILL SEEDING
1. ALL SEED SHALL BE DR LL SEEDED AT THE RATES SHOWN ON THE PLANS, WITH A HYDROMULCH MIX APPLIED AFTER SEEDING.
2. THE HYDROMULCH MIX (PER 1,000 SF) SHALL BE AS FOLLOWS:
      50# CELLULOSE FIBER MULCH
      15# 15-15-15 WATER SOLUBLE FERTILIZER
      4# ORGANIC B NDER

I. MULCH
1. INSTALL MULCH TOPDRESS NG, TYPE AND DEPTH PER MULCH NOTE, IN ALL PLANTING AREAS AND TREE RINGS.
2. DO NOT NSTALL MULCH WITH N 6" OF TREE ROOT FLARE AND WITHIN 24" OF HABITABLE STRUCTURES, EXCEPT AS MAY BE NOTED ON THESE PLANS. MULCH COVER WITH N 6" OF CONCRETE WALKS AND CURBS SHALL NOT PROTRUDE ABOVE THE F NISH SURFACE OF THE WALKS AND CURBS. MULCH COVER WITH N 12" OF WALLS SHALL BE AT LEAST 3" LOWER THAN THE TOP OF WALL.

J. CLEAN UP
1. DUR NG LANDSCAPE PREPARATION AND PLANTING, KEEP ALL PAVEMENT CLEAN AND ALL WORK AREAS IN A NEAT, ORDERLY CONDITION.
2. DISPOSED LEGALLY OF ALL EXCAVATED MATERIALS OFF THE PROJECT SITE.

K. INSPECTION AND ACCEPTANCE
1. UPON COMPLETION OF THE WORK, THE LANDSCAPE CONTRACTOR SHALL PROVIDE THE SITE CLEAN, FREE OF DEBRIS AND TRASH, AND SUITABLE FOR USE AS NTENDED. THE LANDSCAPE CONTRACTOR SHALL THEN REQUEST AN INSPECTION BY THE OWNER TO DETERMINE F NAL ACCEPTABILITY.
2. WHEN THE NSPECTED PLANTING WORK DOES NOT COMPLY WITH THE CONTRACT DOCUMENTS, THE LANDSCAPE CONTRACTOR SHALL REPLACE AND/OR REPA R THE REJECTED WORK TO THE OWNER'S SATISFACTION WITH N 24 HOURS.
3. THE LANDSCAPE MA NTENANCE PERIOD WILL NOT COMMENCE UNT L THE LANDSCAPE WORK HAS BEEN RE-INSPECTED BY THE OWNER AND FOUND TO BE ACCEPTABLE. AT THAT T ME, A WRITTEN NOTICE OF FINAL ACCEPTANCE WILL BE ISSUED BY THE OWNER, AND THE MA NTENANCE AND GUARANTEE PERIODS WILL COMMENCE.

L. LANDSCAPE MA NTENANCE
1. THE LANDSCAPE CONTRACTOR SHALL BE RESPONSIBLE FOR THE MAINTENANCE OF ALL WORK SHOWN ON THESE PLANS FOR 90 DAYS BEYOND F NAL ACCEPTANCE OF ALL LANDSCAPE WORK BY THE OWNER. LANDSCAPE MAINTENANCE SHALL INCLUDE WEEKLY SITE VISITS FOR THE FOLLOWING ACTIONS (AS APPROPRIATE): PROPER PRUNING, RESTAK NG OF TREES, RESETTING OF PLANTS THAT HAVE SETTLED, MOW NG AND AERATION OF LAWNS, WEED NG, RESEED NG AREAS WHICH HAVE NOT GERMINATED WELL, TREATING FOR INSECTS AND DISEASES,REPLACEMENT OF MULCH, REMOVAL OF LITTER, REPA RS TO THE RRIGATION SYSTEM DUE TO FAULTY PARTS AND/OR WORKMANSH P, AND THE APPROPRIATE WATERING OF ALL PLANTINGS. THE LANDSCAPE CONTRACTOR SHALL MAINTA N THE RRIGATION SYSTEM IN PROPER WORKING ORDER, WITH SCHEDUL NG ADJUSTMENTS BY SEASON TO MAXIMIZE WATER CONSERVATION.
2. SHOULD SEEDED AND/OR SODDED AREAS NOT BE COVERED BY AN AUTOMATIC IRRIGATION SYSTEM, THE LANDSCAPE CONTRACTOR SHALL BE RESPONS BLE FOR WATERING THESE AREAS AND OBTA NING A FULL, HEALTHY STAND OF PLANTS AT NO ADDITIONAL COST TO THE OWNER.
3. TO ACHIEVE FINAL ACCEPTANCE AT THE END OF THE MAINTENANCE PERIOD, ALL OF THE FOLLOW NG CONDITIONS MUST OCCUR:
   a. THE LANDSCAPE SHALL SHOW ACTIVE, HEALTHY GROWTH (WITH EXCEPTIONS MADE FOR SEASONAL DORMANCY). ALL PLANTS NOT MEETING THIS CONDITION SHALL BE REJECTED AND REPLACED BY HEALTHY PLANT MATERIAL PRIOR TO F NAL ACCEPTANCE.
   b. ALL HARDSCAPE SHALL BE CLEANED PRIOR TO F NAL ACCEPTANCE.
   c. SODDED AREAS MUST BE ACTIVELY GROWING AND MUST REACH A MIN MUM HEIGHT OF 1 1/2 NCHES BEFORE F RST MOWING. HYDROMULCHED AREAS SHALL SHOW ACTIVE, HEALTHY GROWTH. BARE AREAS LARGER THAN TWELVE SQUARE INCHES MUST BE RESODDED OR RESEEDED (AS APPROPRIATE) PRIOR TO FINAL ACCEPTANCE. ALL SODDED TURF SHALL BE NEATLY MOWED.

M. WARRANTY PERIOD, PLANT GUARANTEE AND REPLACEMENTS
1. THE LANDSCAPE CONTRACTOR SHALL GUARANTEE ALL TREES, SHRUBS, PERENNIALS, SOD, SEEDED/HYDROMULCHED AREAS, AND RRIGATION SYSTEMS FOR A PERIOD OF ONE YEAR FROM THE DATE OF THE OWNER'S FINAL ACCEPTANCE (90 DAYS FOR ANNUAL PLANTS). THE CONTRACTOR SHALL REPLACE, AT HIS OWN EXPENSE AND TO THE SATISFACTION OF THE OWNER, ANY PLANTS WHICH DIE IN THAT T ME, OR REPA R ANY PORTIONS OF THE RRIGATION SYSTEM WHICH OPERATE MPROPERLY.
2. AFTER THE INITIAL MA NTENANCE PERIOD AND DUR NG THE GUARANTEE PERIOD, THE LANDSCAPE CONTRACTOR SHALL ONLY BE RESPONS BLE FOR REPLACEMENT OF PLANTS WHEN PLANT DEATH CANNOT BE ATTRIBUTED D RECTLY TO OVERWATER NG OR OTHER DAMAGE BY HUMAN ACTIONS.

N. PROVIDE A M NIMUM OF (2) COP ES OF RECORD DRAWINGS TO THE OWNER UPON COMPLETION OF WORK. A RECORD DRAW NG IS A RECORD OF ALL CHANGES THAT OCCURRED IN THE F ELD AND THAT ARE DOCUMENTED THROUGH CHANGE ORDERS, ADDENDA, OR CONTRACTOR/CONSULTANT DRAWING MARKUPS.

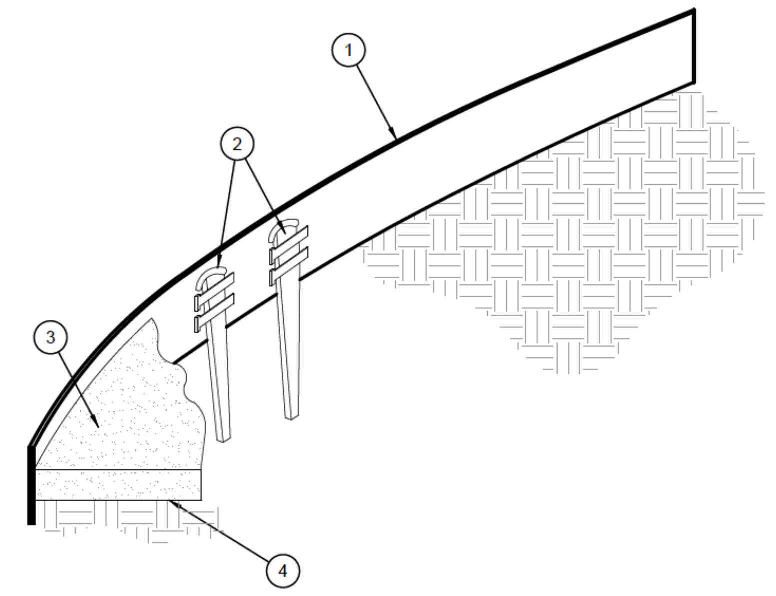

1. ROLLED-TOP STEEL EDGING PER PLANS.
2. TAPERED STEEL STAKES.
3. MULCH, TYPE AND DEPTH PER PLANS.
4. F NISH GRADE.

NOTES:
1) NSTALL EDGING SO THAT STAKES W LL BE ON NS DE OF PLANT NG BED.
2) BOTTOM OF EDGING SHALL BE BURIED A MINIMUM OF 1" BELOW FINISH GRADE.
3) TOP OF MULCH SHALL BE 1" LOWER THAN TOP OF EDGING.

D STEEL EDGING
SCALE: NOT TO SCALE

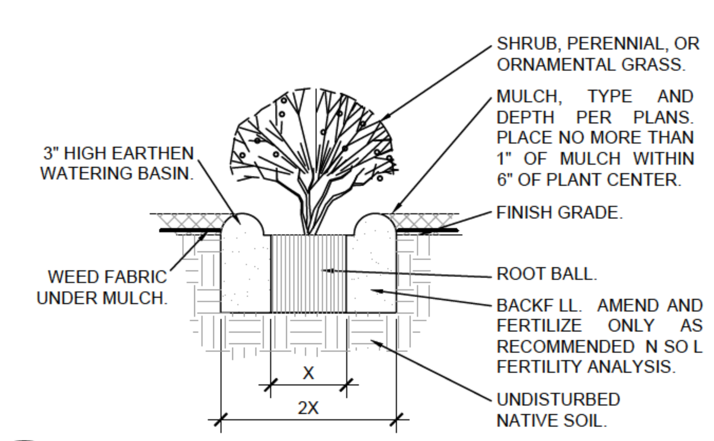

C SHRUB/GROUNDCOVER PLANTING
SCALE: NTS

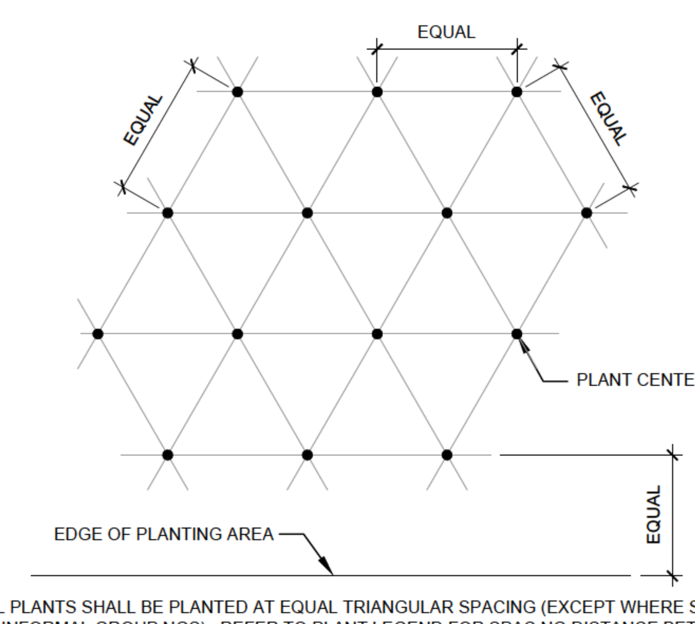

NOTE: ALL PLANTS SHALL BE PLANTED AT EQUAL TRIANGULAR SPACING (EXCEPT WHERE SHOWN ON PLANS AS INFORMAL GROUP NGS). REFER TO PLANT LEGEND FOR SPAC NG DISTANCE BETWEEN PLANTS.

1) STEP 1: DETERMINE TOTAL PLANTS FOR THE AREA WITH THE FOLLOW NG FORMULA:
TOTAL AREA / AREA DIV DER = TOTAL PLANTS

PLANT SPACING	AREA DIVIDER	PLANT SPACING	AREA DIVIDER
6"	0.22	18"	1 95
8"	0.39	24"	3.46
10"	0.60	30"	5.41
12"	0.87	36"	7.79
15"	1 35		

2) STEP 2: SUBTRACT THE ROW (S) OF PLANTS THAT WOULD OCCUR AT THE EDGE OF THE PLANTED AREA WITH THE FOLLOWING FORMULA:
TOTAL PERIMETER LENGTH / PLANT SPACING = TOTAL PLANT SUBTRACTION

EXAMPLE PLANTS AT 18" O.C. IN 100 SF PLANTING AREA, 40 LF PER METER
STEP 1: 100 SF/1.95 = 51 PLANTS
STEP 2: 51 PLANTS - (40 LF / 1.95 = 21 PLANTS) = 30 PLANTS TOTAL

B PLANT SPACING
SCALE: NTS

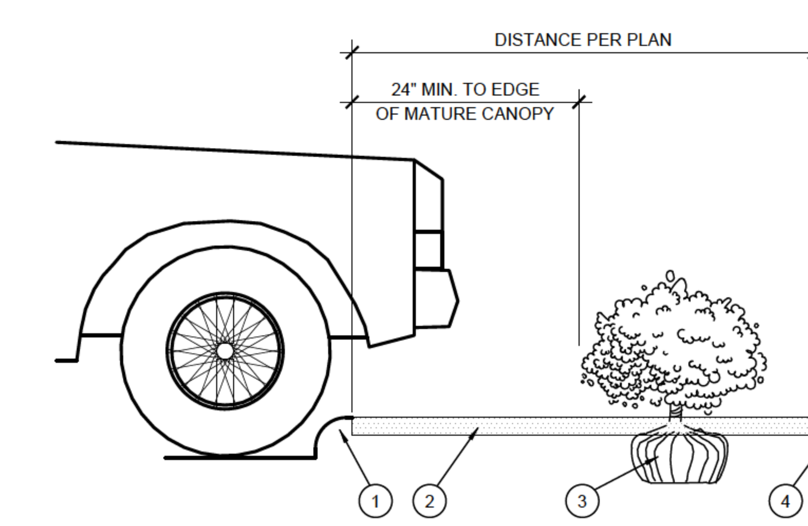

1. CURB.
2. MULCH LAYER.
3. PLANT.
4. TURF (WHERE SHOWN ON PLAN).

A PLANTING AT PARKING AREA
SCALE: NOT TO SCALE

National Presence. Local Expertise.
EVERGREEN DESIGN GROUP
800.680.6630
www.evergreendesigngroup.com
LANDSCAPE ARCHITECTURE
LAND PLANNING · IRRIGATION DESIGN

ALTAR GROUP
ARCHITECTURE
ENGINEERING

SEAL
REGISTERED LANDSCAPE ARCHITECT
STEPHEN W. SALES
3470
STATE OF TEXAS
02/21/2025

CONSULTANT

TAKE 5 OIL CHANGE
PROTOTYPE: 3 BAY
5331 WALZEM ROAD
SAN ANTONIO, TX 78218

REV	DATE	DESCRIPTION
1	11/26/24	ISSUE FOR PERMIT
2	2/21/25	RE-ISSUE FOR PERMIT

DRAWN BY: JK
CHECKED BY: SS
ARCH. PROJECT NO.: DB24-023
SHEET NAME: PLANTING DETAILS AND SPECIFICATIONS
SHEET NUMBER: LP-2

CONTROLLER NOTE

LOCATE CONTROLLER AT LOCATION SHOWN ON PLAN. VERIFY LOCATION IN FIELD WITH OWNER'S REPRESENTATIVE.

120 VAC POWER TO CONTROLLER LOCATION IS NOT WITHIN THE IRRIGATION CONTRACTOR'S SCOPE OF WORK, AND SHALL BE PROVIDED BY OTHERS. HOOK-UP OF CONTROLLER TO 120 VAC SHALL BE PERFORMED BY THE IRRIGATION CONTRACTOR. IRRIGATION CONTRACTOR SHALL COORDINATE LOCATION OF WIRE SLEEVE PENETRATIONS THROUGH BUILDING WITH OWNER AND GENERAL CONTRACTOR. STATION RUN ORDER SHALL MATCH PLANS.

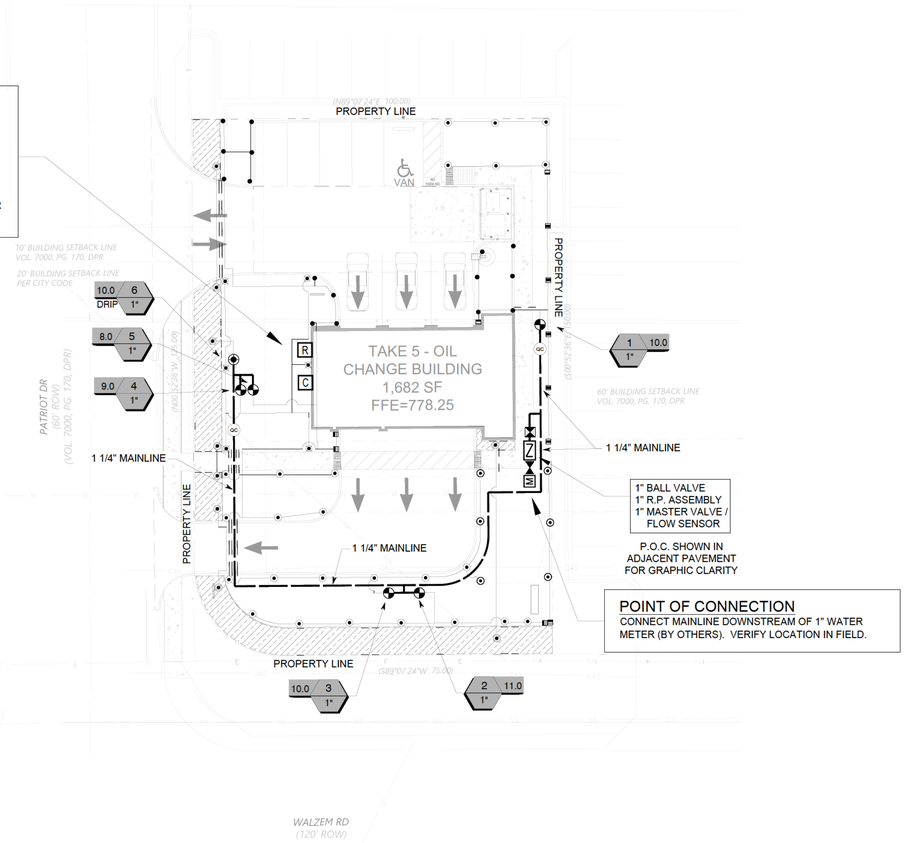

POINT OF CONNECTION

CONNECT MAINLINE DOWNSTREAM OF 1" WATER METER (BY OTHERS). VERIFY LOCATION IN FIELD.

VALVE KEY

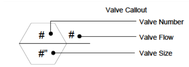

IRRIGATION LEGEND

SYMBOL	MANUFACTURER/MODEL
	RAIN BIRD R-VAN-STRIP 1806-SAM-P45 ,TURF ROTARY, 5'X15' (LCS AND RCS), 5'X30' (SST) HAND ADJUSTABLE MULTI-STREAM ROTARY W/ 1800 TURF SPRAY BODY ON 6.0" POP-UP, WITH CHECK VALVE AND 45 PSI IN-STEM PRESSURE REGULATOR. 1/2" NPT FEMALE THREADED INLET.
	RAIN BIRD R-VAN14 1806-SAM-P45, TURF ROTARY, 8'-14' 45°-270° AND 360° HAND ADJUSTABLE MULTI-STREAM ROTARY W/1800 TURF SPRAY BODY ON 6.0" POP-UP, WITH CHECK VALVE AND 45 PSI IN-STEM PRESSURE REGULATOR. 1/2" NPT FEMALE THREADED INLET.
	RAIN BIRD R-VAN18 1806-SAM-P45, TURF ROTARY, 13'-18' 45°-270° AND 360° HAND ADJUSTABLE MULTI-STREAM ROTARY W/1800 TURF SPRAY BODY ON 6.0" POP-UP, WITH CHECK VALVE AND 45 PSI IN-STEM PRESSURE REGULATOR. 1/2" NPT FEMALE THREADED INLET.
	RAIN BIRD R-VAN24 1806-SAM-P45, TURF ROTARY, 17'-24' 45°-270° AND 360° HAND ADJUSTABLE MULTI-STREAM ROTARY W/1800 TURF SPRAY BODY ON 6.0" POP-UP, WITH CHECK VALVE AND 45 PSI IN-STEM PRESSURE REGULATOR. 1/2" NPT FEMALE THREADED INLET.
	RAINBIRD 5004PCSAMR, ADJUSTABLE ARC 4" POP UP ROTARY HEAD, PART CIRCLE, #1.5 LA NOZZLE UNLESS NOTED OTHERWISE
	RAINBIRD XCZ-100-PRB-COM / 150-PRB-COM SERIES AUTOMATIC DRIP VALVE ASSEMBLY WITH 40 PSI PRESSURE REGULATOR XCZ-100-PRB-COM - 1" BALL VALVE WITH 1" PESB VALVE AND 1" PRESSURE REGULATING 40PSI QUICK-CHECK BASKET FILTER. 0.3GPM TO 20GPM.
	RAINBIRD PEB SERIES 1", 1-1/2", 2" PLASTIC INDUSTRIAL VALVES. LOW FLOW OPERATING CAPABILITY, GLOBE CONFIGURATION.
	AREA TO RECEIVE DRIPLINE RAINBIRD XFS-CV-06-12 SERIES DRIP TUBE IN SHRUB BED INSTALLED AT 2" DEPTH
	PIPE TRANSITION POINT ABOVE GRADE PIPE TRANSITION POINT FROM PVC LATERAL TO DRIP TUBING WITH RISER TO ABOVE GRADE INSTALLATION.
	ZURN / WILKINS 375XLB SERIES REDUCED PRESSURE TYPE BACKFLOW PREVENTOR INSTALLED PER CITY CODE WITH SAME SIZE BRONZE BALL VALVE INSTALLED ON THE UP-STREAM SIDE. MOUNTED IN STRONGBOX SMOOTH TOUCH ENCLOSURE.
	LASCO "V" SERIES SCH. 80 PVC TRUE UNION BALL VALVE, MAINLINE SIZE
M	IRRIGATION WATER METER AND TAP (BY OTHERS) SIZE AS NOTED ON THE PLAN
QC	RAINBIRD 33-DNP QUICK COUPLING VALVE WITH LOCKING PURPLE COVER AND 3/4" PVC BALL VALVE
C	RAINBIRD ESP12LXMEF2P SERIES AUTOMATIC WALL MOUNT CONTROLLER
R	RAINBIRD WR2-RFC RAIN / FREEZE SENSOR - CONFIRM SENSOR LOCATION WITH OWNERS REPRESENTATIVE
	1" MASTER VALVE MODEL # 100-EFB-CP WITH RAINBIRD FLOW SENSOR MODEL #FS100B SERIES

IRRIGATION LATERAL LINE: CLASS 200 PVC
IRRIGATION MAINLINE: CLASS 200 PVC
IRRIGATION SLEEVES, SCH. 40 PVC, MIN. TWICE SIZE OF PIPE TO BE INSERTED

IRRIGATION DISCLAIMER

THIS DESIGN IS DIAGRAMMATIC. ALL PIPING, VALVES, AND OTHER EQUIPMENT SHOWN WITHIN PAVED AREAS OR OUT OF PROPERTY BOUNDARIES ARE FOR DESIGN CLARIFICATION ONLY, AND SHALL BE INSTALLED IN PLANTING AREAS WITHIN THE PROPERTY LINES OR LIMITS INDICATED ON PLAN. THE IRRIGATION CONTRACTOR SHALL VERIFY THE LOCATIONS OF ALL ABOVE-GRADE IRRIGATION EQUIPMENT WITH THE OWNER'S AUTHORIZED REPRESENTATIVE PRIOR TO INSTALLATION, OR IRRIGATION CONTRACTOR MAY BE REQURED TO MOVE SUCH ITEMS AT HIS OWN COST.

IRRIGATION CONTRACTOR IS RESPONSIBLE FOR VERIFYING ALL FINAL QUANTITIES PER DRAWINGS AND SPECIFICATIONS. ANY QUANTITIES PROVIDED ARE PROVIDED AS A CONVENIENCE TO THE CONTRACTOR ONLY AND SHALL NOT BE CONSIDERED ABSOLUTE.

AUTOMATIC DRAIN VALVES AND AIR RELIEF VALVES

INSTALL AUTOMATIC DRAIN VALVES AT THE LOW POINTS OF EACH LATERAL LINE (MIN. 2 PER VALVE) AS PER DETAIL ON SHEET LI-2. INSTALL AIR RELIEF VALVES ON DRIP SYSTEMS AT THE LCOATIONS SHOWN ON THE PLANS, AS PER DETAILS.

SLEEVING / WIRING NOTES:

IN ADDITION TO PROVIDING SLEEVES FOR ALL PIPING UNDER ROADWAYS AND WALKWAYS, THE IRRIGATION CONTRACTOR SHALL PROVIDE AND INSTALL SCH. 40 PVC SLEEVES FOR ALL CONTROLLER WIRES OCCURRING UNDER ALL ROADWAYS AND WALKWAYS. SLEEVES FOR CONTROLLER WIRES SHALL BE 2" DIA. AND CONTAIN NO MORE THAN 25 WIRES. **FOR PLAN CLARITY, ONLY SOME REPRESENTATIVE SLEEVES ARE SHOWN; SOME SLEEVES MAY NOT BE SHOWN.**

811 Know what's below. Call before you dig.

NOTE:
THE CONTRACTOR IS SPECIFICALLY CAUTIONED THAT THE LOCATION AND/OR ELEVATION OF EXIST NG UT LIT ES AS SHOWN ON THESE PLANS IS BASED ON DESIGN DRAW NGS, RECORDS OF THE VARIOUS UT LITY COMPAN ES, AND WHERE POSS BLE, MEASUREMENTS TAKEN IN THE F ELD. THE DESIGNER DOES NOT GUARANTEE THAT LOCATIONS SHOWN ARE EXACT. THE CONTRACTOR MUST CONTACT THE APPROPRIATE UTILITY COMPANIES AT LEAST 72 HOURS BEFORE ANY EXCAVATION TO REQUEST EXACT FIELD LOCATIONS OF UT LITIES. AS SUCH THE GENERAL CONTRACTOR SHALL BE RESPONSIBLE FOR LOCATING AND UNCOVER NG EXIST NG UT LIT ES IN THE VIC NITY OF THE PROPOSED MPROVEMENTS AND UTILITY CONNECTION POINTS PRIOR TO THE START OF CONSTRUCTION TO ASCERTAIN EXACT MATERIALS, LOCATIONS, ELEVATIONS, ETC. AND THEIR POTENTIAL CONFLICT WITH PROPOSED IMPROVEMENTS. GC SHALL CONSULT WITH CONSTRUCTION MANAGER AND ENGINEER AS APPROPRIATE BEFORE PROCEEDING WITH WORK.

IRRIGATOR'S LETTER OF CONFORMITY

T0 WHOM IT MAY CONCERN:
I, GEORGE ANAYA, A LICENSED IRRIGATOR IN THE STATE OF TEXAS, DO CERTIFY THAT THE IRRIGATION PLAN SUBMITTED CONFORMS TO THE IRRIGATION DESIGN AND EQUIPMENT STANDARDS SET FORTH IN 35-510(c)(6) OF THE CITY OF SAN ANTONIO UNIFIED DEVELOPMENT CODE AND ALSO COMPLIES WITH THE REQUIREMENTS OF CHAPTER 344, 344.72-344.77 OF THE TEXAS ADMINISTRATIVE CODE.

IF FURTHER INFORMATION IS NEEDED, PLEASE FEEL FREE TO CONTACT ME AT (800) 680-6630

02/21/2025

LICENSED IRRIGATOR #LI26417 DATE

NORTH

0' 10' 20' 40'

Scale 1" = 20'

NOTE: PR NTED DRAWING SIZE MAY HAVE CHANGED FROM ORIGINAL. VERIFY SCALE US NG BAR SCALE ABOVE.

National Presence. Local Expertise.
EVERGREEN DESIGN GROUP
800.680.6630
www.evergreendesigngroup.com
LANDSCAPE ARCHITECTURE
LAND PLANNING · IRRIGATION DESIGN

ALTAR GROUP
ARCHITECTURE
ENGINEERING

SEAL

STATE OF TEXAS
GEORGE ANAYA
26417
LICENSED IRRIGATOR

02 / 21 / 2025

CONSULTANT

TAKE 5 OIL CHANGE
PROTOTYPE: 3 BAY
5331 WALZEM ROAD
SAN ANTONIO, TX 78218

REV	DATE	DESCRIPTION
1	11/26/24	ISSUE FOR PERMIT
2	2/21/25	RE-ISSUE FOR PERMIT

DRAWN BY: GA
CHECKED BY: AM
ARCH. PROJECT NO.: DB24-023
SHEET NAME: IRRIGATION PLAN
SHEET NUMBER: LI-1

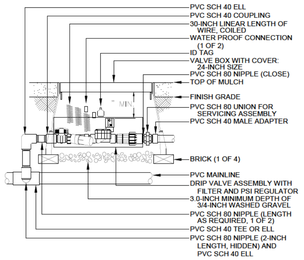

CONTROL ZONE KIT

N.T.S.

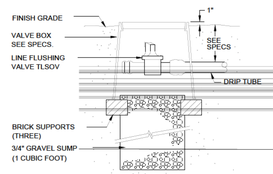

MANUAL LINE FLUSH VALVE

N.T.S.

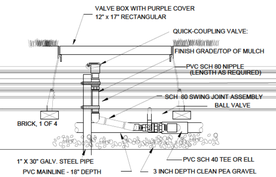

N.T.S.

QUICK COUPLER VALVE WITH PVC BALL VALVE

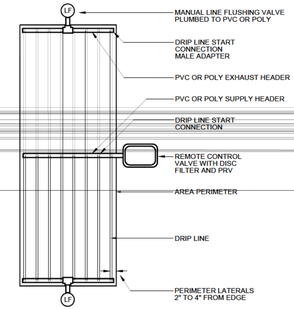

SUPPLY AND EXHAUST HEADERS SHALL BE CLASS 200 PVC PIPE, OF THE SAME DIAMETER AS THE ZONE VALVE SIZE.

USE DRIP TUBE FOR SUPPLY AND EXHAUST HEADERS ON GRIDS WITH FLOW SMALLER THAN 5 GPM ONLY.

DRIP CENTER FEED LAYOUT

N.T.S.

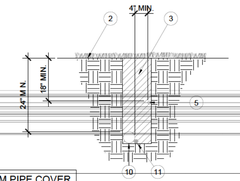

MINIMUM PIPE COVER	
PIPE SIZE	COVER
1/2" TO 2-1/2"	18" MIN.
3" TO 5"	24" M.N.
6" AND LARGER	30" M.N.

1. PAVEMENT SURFACE
2. FINISH GRADE
3. TRENCH BACKF LL
4. LOCATOR W RE W/BUR ED CAUTION TAPE
5. PVC RRIGATION LATERAL
6. SAND BACKFILL
7. SCH. 40 PVC LATERAL SLEEVE - SEE PLANS FOR SIZE
8. SCH. 40 PVC WIRE SLEEVE FOR CONTROL WIRES, MIN. 2" DIA.
9. SCH. 40 PVC MA NLINE SLEEVE - SEE PLANS FOR SIZE
10. PVC RRIGATION MA NL NE
11. CONTROL WIRES - TAPE TO MA NL NE AT 18' INTERVALS
12. PVC CAP, SOLVENT WELDED

TRENCHING

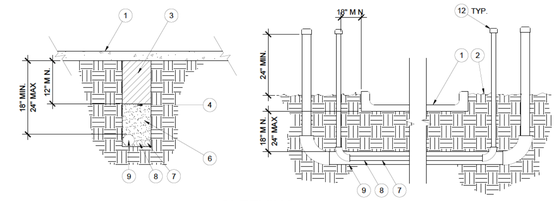

SLEEVING

PIPE AND SLEEVE INSTALLATION

N.T.S.

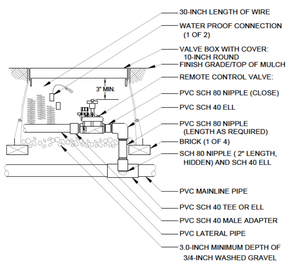

REMOTE CONTROL VALVE

N.T.S.

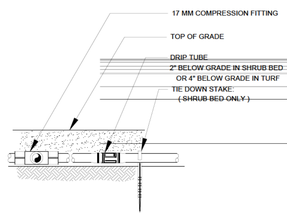

DRIP TUBE

N.T.S.

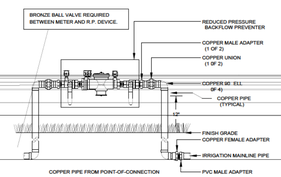

NOTE:
1. INSTALL BACKFLOW PREVENTER AS REQUIRED BY LOCAL CODES AND HEALTH DEPARTMENT. VERIFY LOCAL REQUIREMENTS PRIOR TO INSTALLATION.

RP DEVICE

N.T.S.

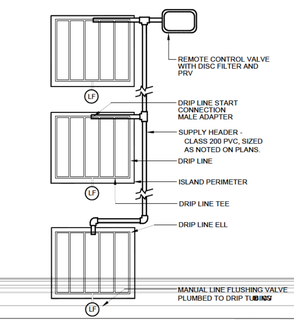

USE DRIP TUBE FOR SUPPLY AND EXHAUST HEADERS ON GRIDS WITH FLOW SMALLER THAN 5 GPM ONLY.

DRIP ISLAND LAYOUT

N.T.S.

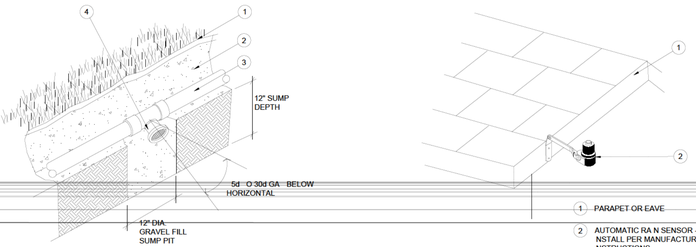

RAIN SENSOR, ROOF MOUNT

N.T.S.

NOTE:
AUTOMATIC VALVES ARE TO BE LOCATED AT LOW POINTS OF LATERAL L NES. LOCATE END DRA N VALVE 12" UPSTREAM FROM LAST HEAD.

1. F NISH GRADE
2. P PE TRENCH
3. LATERAL LINE P PE
4. AUTOMATIC DRAIN VALVE

AUTOMATIC DRAIN VALVE

N.T.S.

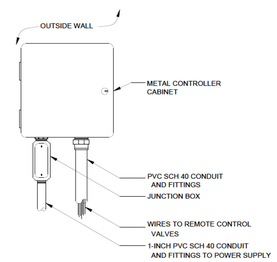

WALL MOUNT CONTROLLER

N.T.S.

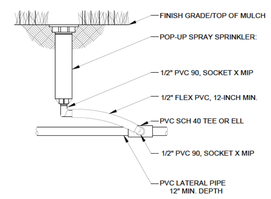

POP-UP SPRAY HEAD

N.T.S.

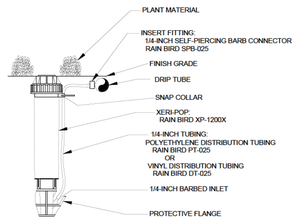

NOTE:
USE XERIMAN TOOL XM-TOOL TO INSERT BARB CONNECTOR DIRECTLY INTO 1/2-INCH POLYETHYLENE TUBING.
LOCATE AT FURTHEST DISTANCE FROM DRIP VALVE ASSEMPLY, ADJACENT TO EDGING OR WITHIN LOW PLANTINGS FOR OPTIMUM VIEWING. WITH CLOSED SPRAY NOZZLE.

DRIP ZONE INDICATOR

N.T.S.

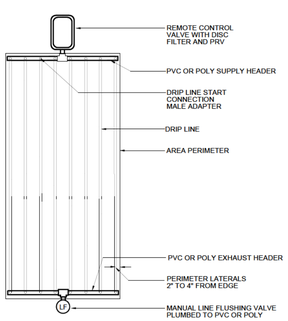

SUPPLY AND EXHAUST HEADERS SHALL BE CLASS 200 PVC PIPE, OF THE SAME DIAMETER AS THE ZONE VALVE SIZE.

USE DR P TUBE FOR SUPPLY AND EXHAUST HEADERS ON GRIDS WITH FLOW SMALLER THAN 5 GPM ONLY.

DRIP END FEED LAYOUT

N.T.S.

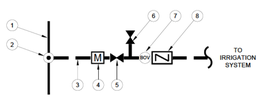

DEDICATED IRRIGATION TAP

1. CITY MAINLINE
2. TAP
3. SERVICE LINE
4. WATER METER
5. ISOLATION VALVE (PER PLAN)
6. MANUAL DRAIN VALVE (BALL VALVE)
7. BLOW OFF VALVE (BOV)
8. BACKFLOW DEVICE (WHERE SHOWN)

WINTERIZATION PROCEDURE:
1. TURN OFF EITHER THE METER AND ISOLATION VALVE (DEDICATED IRRIGATION METER) OR ISOLATION VALVE (DOMESTIC TAP).
2. OPEN ONE CONTROL VALVE TO RELIEVE PRESSURE.
3. SLOWLY OPEN MANUAL DRAIN VALVE.
4. REPEAT PROCEDURE FOR ALL MANUAL DRAIN VALVES ALONG IRRIGATION MAINLINE.
5. CLOSE MANUAL DRAIN VALVES AND BLOW OUT REMAINING WATER FROM THE BLOWOUT VALVE. SLOWLY INCREASE AIR PRESSURE, NOT TO EXCEED 80 PSI. DO NOT BLOWOUT SYSTEM FROM BACKFLOW. BLOWOUT SYSTEM TWICE BUT NOT TO EXCEED AT MORE THAN 2 MIN. INTERVALS.

WATER TAP DIAGRAM

N.T.S.

ROTOR POP-UP SPRINKLER

N.T.S.

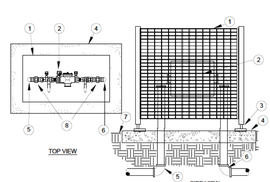

LEGEND
1.SMOOTH TOUCH BACKFLOW COVER.
2.R. P. DEVICE BACKFLOW PREVENTER
3.ANCHOR ROD (TYPICAL).
4.POURED CONCRETE BASE. 4" MIN. THICKNESS - EXTEND 4" BEYOND OUTSIDE DIMENSIONS OF ENCLOSURE.
5.WATER SERVICE INLET PIPING.
6.WATER SERVICE OUTLET PIPING.
7.FINISH GRADE.
8. BRONZE UNIONS

RP DEVICE WITH ENCLOSURE

N.T.S.

ALTAR GROUP
ARCHITECTURE ENGINEERING

SEAL

STATE OF TEXAS
GEORGE ANAYA
26417
LICENSED IRRIGATOR
02 / 21 / 2025

CONSULTANT

TAKE 5 OIL CHANGE
PROTOTYPE: 3 BAY
5331 WALZEM ROAD
SAN ANTONIO, TX 78218

REV	DATE	DESCRIPTION
1	11/26/24	ISSUE FOR PERMIT
2	2/21/25	RE-ISSUE FOR PERMIT

DRAWN BY: GA
CHECKED BY: AM
ARCH. PROJECT NO.: DB24-023
SHEET NAME: IRRIGATION DETAILS
SHEET NUMBER: LI-2

National Presence. Local Expertise.
EVERGREEN DESIGN GROUP
800.680.8630
www.evergreendesigngroup.com
LANDSCAPE ARCHITECTURE
LAND PLANNING · IRRIGATION DESIGN

IRRIGATION SPECIFICATIONS

GENERAL

A. QUALIFICATIONS OF IRRIGATION CONTRACTOR
1. ALL WORK SHOWN ON THESE PLANS SHALL BE PERFORMED BY A S NGLE IRRIGATION CONTRACT NG F RM SPECIALIZ NG IN IRRIGATION SYSTEMS. SEE THE IRRIGATION PLAN FOR SPEC FIC EQUIPMENT AND SYSTEM LAYOUT.
2. THE IRRIGATION CONTRACTOR MUST HAVE ON ITS STAFF A TEXAS LICENSED IRRIGATOR, AS REGULATED BY THE TEXAS COMMISSION ON ENV RONMENTAL QUALITY. A LICENSED IRRIGATOR OR LICENSED IRRIGATION INSTALLER SHALL BE PRESENT AT THE PROJECT SITE AT ALL TIMES AS WORK IS IN PROGRESS. THE OWNER MAY DEMAND THAT WORK STOP UNTIL THE CONTRACTOR PROV DES FOR A LICENSED IRRIGATOR OR LICENSED IRRIGATION INSTALLER TO BE PRESENT AT THE PROJECT SITE AND SUPERVISING ALL IRRIGATION WORK.
3. A LIST OF SUCCESSFULLY COMPLETED PROJECTS OF THIS TYPE, SIZE AND NATURE MAY BE REQUESTED BY THE OWNER FOR FURTHER QUAL FICATION MEASURES.

B. SCOPE OF WORK
1. WORK COVERED BY THESE SECTIONS INCLUDES THE FURNISHING AND PAYMENT OF ALL MATERIALS, LABOR, SERVICES, EQU PMENT, LICENSES, TAXES, FEES, AND ANY OTHER ITEMS THAT ARE NECESSARY FOR THE EXECUTION, NSTALLATION AND COMPLETION OF ALL WORK, SPEC F ED HEREIN AND/OR SHOWN ON THE IRRIGATION PLANS, NOTES, AND DETA LS.
2. ALL WORK SHALL BE PERFORMED N ACCORDANCE WITH ALL APPLICABLE LAWS, CODES AND REGULATIONS REQUIRED BY AUTHORIT ES HAV NG JURISDICTION OVER SUCH WORK, NCLUDING ALL INSPECTIONS AND PERMITS REQU RED BY FEDERAL, STATE AND LOCAL AUTHORITIES IN SUPPLY, TRANSPORTATION AND INSTALLATION OF MATERIALS. IN CASE OF CONFLICT BETWEEN THESE PLANS AND LOCAL AND/OR STATE CODES, CODES SHALL PREVAIL.
3. THE INTENT OF THE IRRIGATION SYSTEM IS TO PROVIDE 100% COVERAGE OF ALL LANDSCAPE AREAS. THE IRRIGATION PLAN IS GENERALLY DIAGRAMMATIC, COORD NATE IRRIGATION NSTALLATION WITH UTILITY INSTALLATIONS. ACTUAL LOCATION OF CONTROLLER, BACKFLOW DEVICE, PIP NG, VALVES, SPRAY HEADS, DR P RRIGATION, AND RELATED EQUIPMENT MAY NEED TO BE ADJUSTED BASED ON ACTUAL SITE CONDITIONS.
4. FOR CLARITY PURPOSES, SOME IRRIGATION LINES AND EQUIPMENT ARE SHOWN IN HARDSCAPE AREAS WITHOUT ACCESS SLEEVES; THESE L NES SHALL BE INSTALLED N A COMMON TRENCH OR AT THE BACK OF CURB IN LANDSCAPE AREAS. M NOR F ELD ADJUSTMENTS SHALL BE MADE AT NO ADDITIONAL COST TO THE OWNER.

PRODUCTS

A. ALL MATERIALS SHALL BE NEW AND WITHOUT FLAWS OR DEFECTS OF ANY TYPE AND SHALL BE THE BEST OF THEIR CLASS AND K ND. ALL MATERIALS SHALL HAVE A MIN MUM GUARANTEE OF ONE YEAR AGA NST MATERIAL DEFECTS OR DEFECTIVE WORKMANSHIP. ALL MATERIALS SHALL BE OF THE BRANDS AND TYPES NOTED ON THE DRAW NGS OR AS SPEC F ED HEREIN, OR APPROVED EQUAL. THE CONTRACTOR MUST FIRST OBTAIN APPROVAL FROM THE IRRIGATION DESIGNER FOR AN "APPROVED EQUAL" BEFORE INSTALLING SUCH MATERIALS IN THE F ELD, OR THE CONTRACTOR MAY BE REQUIRED TO REPLACE SUCH MATERIALS AT HIS OWN COST.
B. BACKFLOW PREVENTION DEVICES SHALL BE OF THE SIZE AND TYPE NDICATED ON THE DRAWINGS. NSTALL BACKFLOW PREVENTION UNITS IN ACCORDANCE WITH RRIGATION CONSTRUCTION DETA LS AND ALL APPLICABLE STATE AND LOCAL CODES AND ORD NANCES.
C. P PING
1. PRESSURE SUPPLY L NES, DOWNSTREAM OF THE PO NT-OF-CONNECTION:
   a. SCHEDULE 40 PVC FOR ALL P PE 2-1/2" OR LESS
   b. CLASS 315 PVC, GASKETED, FOR ALL PIPE 3" AND LARGER
2. SLEEVING: SCHEDULE 40 PVC.
3. NON-PRESSURE LATERAL LINES (DOWNSTREAM FROM VALVES): CLASS 200 PVC
4. FITT NGS: SCH. 40 PVC, EXCEPT AS NOTED OTHERWISE.
D. VALVES AND DRIP VALVE ASSEMBLIES: TYPE AND SIZE AS NOTED ON PLANS. EACH VALVE SHALL BEAR A PRE-MANUFACTURED, NUMBERED WATERPROOF TAG BEARING A NUMBER CORRESPONDING TO ITS VALVE SEQUENCE OF OPERATION ON THE CONTROLLER. THE OPERATION SEQUENCE SHALL MATCH THAT AS SHOWN ON THE PLANS.
E. QUICK COUPLERS, BALL VALVES, AND GATE VALVES: TYPE AND SIZE PER PLANS.
F. VALVE BOXES: TYPE AND SIZE AS NOTED ON DETA LS. ALL VALVES BOXES SHALL BE LOCKING BOLT-DOWN TYPE, FURNISHED WITH L DS AND BOLTS. BOXES SHALL BE OF A SIZE TO CONTAIN THE ENTIRE VALVE AND/OR VALVE ASSEMBLY. THE VALVE BOX LID SHALL HAVE THE VALVE STATION NUMBER HEAT-BRANDED INTO THE L D WITH 2" HIGH LETTERS.
G. FIXED SPRAY HEADS AND ROTORS: PLASTIC BODY POP-UP, WITH A REMOVABLE PLASTIC SPRAY NOZZLE. EXACT TYPE, MODEL, AND NOZZLE SHALL BE AS NDICATED ON PLANS.
H. NTEGRAL EMITTER DRIP TUBING: TUBING MODEL AND FLOW RATE AS NOTED ON PLANS, WITH NTEGRAL EMITTERS WELDED TO THE NSIDE WALL OF THE TUB NG AS AN INTEGRAL PART OF THE TUBING ASSEMBLY.
I. AUTOMATIC CONTROLLER: TYPE AND MODEL PER PLANS. PROV DE VANDAL-PROOF ENCLOSURE FOR ALL EXTERIOR INSTALLATIONS. PROVIDE LINE-VOLTAGE DISCONNECT SWITCH WITH GROUND FAULT PROTECTION.
J. W RE SPLICES SHALL BE ENCASED N A WATERPROOF COMPOUND OR GEL. ALL F ELD SPLICES SHALL BE LOCATED N A 6 INCH ROUND VALVE BOX.
K. RA N SENSOR: TYPE AND MODEL PER PLANS.

METHODS

A. THIS DESIGN IS DIAGRAMMATIC. ALL P PING, VALVES, AND OTHER EQU PMENT SHOWN WITHIN PAVED AREAS OR OUT OF PROPERTY BOUNDARIES ARE FOR DESIGN CLARIFICATION ONLY, AND SHALL BE NSTALLED IN PLANTING AREAS WITHIN THE PROPERTY LINES OR LIMITS NDICATED ON PLAN. THE IRRIGATION CONTRACTOR SHALL VERIFY THE LOCATIONS OF ALL ABOVE-GRADE IRRIGATION EQU PMENT WITH THE OWNER'S AUTHORIZED REPRESENTATIVE PRIOR TO NSTALLATION, OR IRRIGATION CONTRACTOR MAY BE REQUIRED TO MOVE SUCH ITEMS AT HIS OWN COST. ENSURE FIELD COORDINATION IS MADE EARLY ON N THE CONSTRUCTION PHASE SO PLACEMENT LOCATION IS CORRECT.
B. THE IRRIGATION CONTRACTOR SHALL MEET WITH THE OWNER'S REPRESENTATIVE PRIOR TO COMMENCEMENT OF WORK, AND SHALL OBTA N ALL ENG NEERING, LANDSCAPE, AND OTHER APPLICABLE PLANS & DOCUMENTS. THE CONTRACTOR SHALL THOROUGHLY REVIEW THE PLANS AND REPORT ANY CONFLICTS OR DISCREPANC ES TO THE LANDSCAPE ARCHITECT AND OWNER'S REPRESENTATIVE IMMEDIATELY.
C. THE IRRIGATION CONTRACTOR SHALL NOT WILFULLY INSTALL THE RRIGATION SYSTEM AS SHOWN ON THE DRAWINGS WHEN IT IS OBVIOUS IN THE F ELD THAT UNKNOWN OBSTRUCTIONS, GRADES OR DIMENSIONS EXIST THAT MIGHT NOT HAVE BEEN CONSIDERED IN THE ENG NEEER NG. SUCH OBSTRUCTIONS OR D FFERENCES SHALL BE BROUGHT TO THE ATTENTION OF THE RRIGATION DESIGNER. IN THE EVENT THAT THIS NOTIFICATION IS NOT PERFORMED, THE RRIGATION CONTRACTOR SHALL ASSUME FULL RESPONSIB LITY FOR ANY REVISIONS AND NECESSARY COSTS.
D. SEE UTILITY PLANS FOR IRRIGATION PO NTS OF CONNECTION (TAP) AND DOMESTIC WATER SUPPLY.
E. THE IRRIGATION CONTRACTOR SHALL PAY ANY AND ALL FEES AND PERMITS ASSOCIATED WITH THE INSTALLATION OF THE IRRIGATION SYSTEM.
F. AT LEAST SEVEN DAYS BEFORE BEGINN NG WORK, CONFIRM THE STATIC WATER PRESSURE IS AT LEAST 65 PSI AND LESS THAN 80 PSI. IF STATIC WATER PRESSURE IS OUTSIDE OF THE STATED RANGE, DO NOT PROCEED WITHOUT F RST NOTIFY NG THE IRRIGATION DESIGNER AND OWNER. N WRIT NG, AND OBTA NING SUBSEQUENT D RECTION FOR CORRECTIONAL MEASURES. SHOULD THE RRIGATION CONTRACTOR CHOOSE TO BEGIN THE INSTALLATION WITHOUT SUCH NOT FICATION, THE IRRIGATION CONTRACTOR WILL ASSUME THE RESPONS BILITY FOR ALL COSTS INCURRED TO ENSURE THE SYSTEM IS WORKING PROPERLY. NO CHANGE ORDERS WILL BE AUTHORIZED IN SUCH C RCUMSTANCES.
G. THE IRRIGATION CONTRACTOR SHALL VERIFY THE LOCATION OF ALL UNDERGROUND UTILITY L NES (WATER, SEWER, ELECTRICAL, TELEPHONE, GAS, CABLE, TELEVISION, ETC.) PRIOR TO THE START OF ANY WORK. THE CONTRACTOR SHALL BE FAM LIAR WITH ALL GRADE DIFFERENCES, LOCATIONS OF WALLS, STRUCTURES AND UTILIT ES.
H. COORDINATE WITH THE OWNER THE PROPOSED LOCATIONS OF THE AUTOMATIC CONTROLLER AND ANY REQUIRED SLEEVES THROUGH THE BU LDING FOR CONTROL WIRES.
I. TRENCH NG NEAR EXIST NG TREES:
1. CONTRACTOR SHALL NOT DISTURB ROOTS 1-1/2" AND LARGER N DIAMETER WITHIN THE CRITICAL ROOT ZONE (CRZ) OF EXISTING TREES, AND SHALL EXERCISE ALL POSS BLE CARE AND PRECAUTIONS TO AVO D INJURY TO TREE ROOTS, TRUNKS, AND BRANCHES. THE CRZ IS DEFINED AS A CIRCULAR AREA EXTENDING OUTWARD FROM THE TREE TRUNK, WITH A RADIUS EQUAL TO 1' FOR EVERY 1" OF TRUNK DIAMETER-AT-BREAST-HEIGHT (4.5' ABOVE THE AVERAGE GRADE AT THE TRUNK).
2. ALL EXCAVATION WITH N THE CRZ SHALL BE PERFORMED USING HAND TOOLS. NO MACH NE EXCAVATION OR TRENCH NG OF ANY K ND SHALL BE ALLOWED WITHIN THE CRZ.
3. ALTER ALIGNMENT OF PIPE TO AVOID TREE ROOTS 1-1/2" AND LARGER IN DIAMETER. WHERE TREE ROOTS 1-1/2" AND LARGER IN DIAMETER ARE ENCOUNTERED IN THE F ELD, TUNNEL UNDER SUCH ROOTS. WRAP EXPOSED ROOTS WITH SEVERAL LAYERS OF BURLAP AND KEEP MOIST. CLOSE ALL TRENCHES WITHIN THE CANOPY DRIP LINES WITHIN 24 HOURS.
4. ALL SEVERED ROOTS SHALL BE HAND PRUNED WITH SHARP TOOLS AND ALLOWED TO AIR-DRY. DO NOT USE ANY SORT OF SEALERS OR WOUND PAINTS.

J. BACKFILL
1. ALL BACKFILL MATERIAL SHALL BE SUBJECT TO APPROVAL BY THE OWNER. BACKF LL MATERIAL SHALL BE FREE FROM RUBBISH, ROCK LARGER THAN 1", LARGE STONES, BRUSH, SOD, FROZEN MATERIAL OR OTHER UNSUITABLE SUBSTANCES THAT MAY DAMAGE PIPE DUR NG THE BACKFILLING OPERATIONS. SEPARATE OUT ROCKS LARGER THAN 1 INCH IN ANY DIRECTION FROM EXCAVATED MATERIAL, AND REMOVE FROM AREAS TO RECEIVE LANDSCAPING. COVER FOR BOTH TOP AND S DES OF P PE SHALL BE A MIN MUM OF 2 NCHES OF ROCK-FREE SOIL, SAND, OR OTHER APPROVED MATERIAL.
2. IN THE EVENT THAT THE MATERIAL FROM THE EXCAVATION OR TRENCH NG IS FOUND TO BE UNSUITABLE FOR USE IN BACKFILL, IT SHALL BE REMOVED FROM THE SITE AND PROPERLY AND LEGALLY DISPOSED OF BY THE CONTRACTOR AT THE CONTRACTOR'S EXPENSE. THE CONTRACTOR SHALL THEN PURCHASE AND AND FURNISH SUITABLE BACKFILL MATERIAL CONSIST NG OF EARTH, LOAM, SANDY CLAY, SAND OR OTHER APPROVED MATERIALS FREE OF DEBRIS.

K. BACKFLOW PREVENTER NSTALLATION: CONTRACTOR SHALL MAKE CONNECTIONS TO EXIST NG WATER SOURCES AT LOCATION SHOWN ON PLANS AND AS APPROVED BY THE OWNER, AND SHALL MAKE ANY M NOR CHANGES IN LOCATION AS MAY BE NECESSARY DUE TO ACTUAL SITE CONDITIONS. BACKFLOW PREVENTER HEIGHT SHALL BE AS PER LOCAL CODES AND IRRIGATION DETAILS. NSTALL A BRASS BALL VALVE IMMEDIATELY UPSTREAM OF THE BACKFLOW DEVICE TO SERVE AS AN ISOLATION VALVE. TO EVERY EXTENT POSSIBLE, NSTALL BACKFLOW PREVENTER ION A LOCATION SCREENED FROM PUBLIC V EW (SUCH AS BEHIND A SHRUB ROW).

L. PIPING:
1. PIPE SIZE SHALL CONFORM TO THOSE SHOWN ON THE DRAWINGS. NO SUBSTITUTIONS OF SMALLER PIPE SIZES SHALL BE PERMITTED, BUT SUBSTITUTIONS FOR LARGER SIZES MAY BE APPROVED.
2. MAINL NE P PE AND WIRES SHALL BE NSTALLED WITH A MIN MUM COVER OF 18 INCHES. LATERAL PIPE SHALL BE INSTALLED WITH A M NIMUM COVER OF 12 INCHES.
3. ASSEMBLE ALL THREADED FITTINGS WITH TEFLON TAPE, WHICH SHALL BE APPLIED TO MALE THREADS ONLY.
4. ALL SOLVENT-WELD CONNECTIONS SHALL BE MADE WITH APPROVED SOLVENT-WELD PR MER AND GLUE.
5. PIPE SHALL BE NSTALLED WITH A MIN MUM OF 4" HORIZONTAL CLEARANCE FROM ANY OTHER P PE AND 2" VERTICAL CLEARANCE FROM ANY PIPES THAT CROSS OVER OR UNDER.

M. VALVES
1. VALVES SHALL BE INSTALLED PER MANUFACTURER'S D RECTIONS AND THE RRIGATION DETA LS.
2. VALVE BOXES SHALL BE INSTALLED FLUSH WITH THE GRADE, WITH CLEAN PEA GRAVEL LOCATED BELOW THE VALVE AS NOTED ON THE DETAILS. LOCATE BOXES WITHIN 12 TO 24" OF S DEWALKS OR LANDSCAPE EDGES, WITH TOPS OF BOXES 1" ABOVE FINISH GRADE N TURF, AND 3" ABOVE F NISH GRADE IN SHRUB AREAS (TO AVO D BE NG COVERED BY MULCH).
3. EACH VALVE BOX COVER SHALL BE HEAT-BRANDED WITH THE CONTROLLER STATION NUMBER.
4. DO NOT INSTALL MORE THAN TWO VALVES N A JUMBO BOX.

N. DR P IRRIGATION EQUIPMENT SHALL BE NSTALLED PER MANUFACTURER'S DIRECTIONS AND THE IRRIGATION DETA LS.
1. SUBSURFACE DRIP LINES SHALL BE BUR ED NO MORE THAN 2" BELOW FINISH GRADE.
2. DR P L NES MOUNTED ON GRADE SHALL BE LOCATED BENEATH LANDSCAPE FABRIC, AND SECURED IN PLACE WITH W RE STAPLES AT A MAXIMUM OF 48" ON CENTER.

O. SPRAY, ROTOR, AND BUBBLER HEADS:
1. ALL SPRAY AND ROTOR HEAD LOCATIONS SHALL BE STAKED, FLAGGED AND/OR OTHERWISE CLEARL Y MARKED ON THE GROUND PRIOR TO INSTALLATION. SPRINKLER HEAD STAKING SHALL BE INSPECTED AND APPROVED BY THE OWNER'S REPRESENTATIVE BEFORE INSTALLATION.
2. ALL SPRAY HEADS SHALL BE CONNECTED WITH A 12 NCH M NIMUM LENGTH OF 1 NCH FLEX PVC. THE FLEX PVC SHALL BE SOLVENT WELDED TO SCHEDULE 40 PVC FITT NGS WITH WELD-ON #795 SOLVENT AND #P-70 PRIMER. ALL ROTORS SHALL BE CONNECTED TO LATERAL LINES WITH PRE-MANUFACTURED SW NG JO NTS.
3. ALL ROTOR, SPRAY AND BUBBLER HEADS SHALL BE SET PERPENDICULAR AND FLUSH TO FINISH GRADE AND WITH A CLEARANCE OF FOUR INCHES (MIN MUM) FROM THE EDGE OF ANY BUILDINGS, WALLS, BOULDERS, AND HARDSCAPE, UNLESS OTHERWISE SPECIFIED.
4. ALL ROTOR, SPRRAY AND BUBBLER HEADS AND VALVES SHALL BE FLUSHED AND ADJUSTED FOR OPT MUM COVERAGE WITH M NIMUM OVERSPRAY ON WALKS, STREETS, WALLS, ETC.
5. LATERAL PIPE TO TREE STREAM BUBBLER HEADS IS OMITTED FOR GRAPHIC CLARITY. CONNECT TREE BUBBLER HEADS TO VALVES AS SHOWN WITH CLASS 200 PVC PIPE SIZED TO ALLOW A MAXIMUM FLOW VELOCITY OF 5 FEET PER SECOND

P. AUTOMATIC CONTROLLER:
1. INSTALL THE CONTROLLER AT THE LOCATION INDICATED BY THE OWNER. NSTALL CONTROLLER WITH A BACKUP BATTERY AS RECOMMENDED BY THE MANUFACTURER.
2. THE RRIGATION CONTRACTOR SHALL COORDINATE 120 V A C. ELECTRICAL POWER TO CONTROLLER AND DEDICATE ONE (1) 20-AMP BREAKER FOR EACH CONTROLLER. IT SHALL BE THE RESPONSIB LITY OF THE IRRIGATION CONTRACTOR TO MAKE THE F NAL HOOK-UP FROM THE ELECTRICAL SOURCE TO THE CONTROLLER UNIT ONLY.
3. ALL VALVE CONTROL WIRE SHALL BE TWO-WIRE CABLE BY CONTROLLER MANUFACTURER, D RECT BURIAL. NO SPLICES SHALL BE ALLOWED EXCEPT AT VALVES AND CONTROLLER. WHERE SPLICES MAY BE NECESSARY DUE TO EXCESSIVELY LONG W RE RUNS, THE CONTRACTOR SHALL MAKE ALL SPLICES IN 6" ROUND VALVE BOXES WITH 3M'S "DBY-DIRECT BURIAL SPLICE KIT". THE CONTRACTOR SHALL LABEL ALL W RES WITH WATERPROOF TAGS AND MARKERS AT ALL SPLICES AND VALVE MAN FOLDS, AND SHALL LEAVE A 24" COIL OF EXCESS WIRE AT EACH CONNECTION.
4. CONNECT ALL DIRECT BURIAL W RES TO VALVES US NG RAIN BIRD WC20 (UNLESS OTHERWISE SPEC FIED).
5. THE RRIGATION CONTRACTOR SHALL BE RESPONSIBLE FOR INSTALLING ALL CONTROL WIRE SLEEVES AND PIPE SLEEVES UNDER PAVED AREAS PRIOR TO PAV NG - SEE SLEEVING NOTES.

Q. INSTALL THE RA N SENSOR IN THE VIC NITY OF THE CONTROLLER, AND COORD NATE LOCATION WITH THE OWNER. IT IS THE RESPONSIBILITY OF THE RRIGATION CONTRACTOR TO ENSURE THE RAIN SENSOR IS PLACED IN A LOCATION WHERE IT CAN RECEIVE ADEQUATE RA NFALL WITHOUT OBSTRUCTIONS. IF IT IS PLACED IN AN INADEQUATE LOCATION, THE IRRIGATION CONTRACTOR MAY BE REQU RED TO RELOCATE IT AT NO ADDITIONAL COST TO THE OWNER.

R. ALL IRRIGATION EQUIPMENT NOT OTHERWISE DETA LED OR SPECIFIED SHALL BE NSTALLED AS PER MANUFACTURER'S RECOMMENDATIONS AND SPEC FICATIONS.

S. QUALITY CONTROL
1. PERFORM COVERAGE TESTS AFTER SPR NKLER SYSTEM IS COMPLETED, BUT PRIOR TO ANY PLANT NG AND PERFORM TESTING N THE PRESENCE OF THE IRRIGATION DESIGNER AND THE CONSTRUCTION MANAGER.
2. TEST SYSTEM TO ASSURE THAT ALL LAWN AND PLANT NG AREAS ARE WATERED COMPLETELY AND UNIFORMLY.
3. MAKE ALL NECESSARY ADJUSTMENTS TO PROVIDE COMPLETE COVERAGE, INCLUDING REALIGNMENT OF HEADS AND REPLACEMENT OF NOZZLES.

U. CLEAN UP
1. DUR NG IRRIGATION EXCAVATION AND NSTALLATION, KEEP ALL PAVEMENT CLEAN AND ALL WORK AREAS N A NEAT, ORDERLY CONDITION.
2. DISPOSED LEGALLY OF ALL EXCAVATED MATERIALS OFF THE PROJECT SITE.

V. INSPECTION AND ACCEPTANCE
1. UPON COMPLETION OF THE WORK, THE IRRIGATION CONTRACTOR SHALL PROVIDE THE SITE CLEAN, FREE OF DEBRIS AND TRASH, AND SUITABLE FOR USE AS NTENDED. THE IRRIGATION CONTRACTOR SHALL THEN REQUEST AN INSPECTION BY THE OWNER TO DETERM NE FINAL ACCEPTABILITY.
2. WHEN THE INSPECTED WORK DOES NOT COMPLY WITH THE CONTRACT DOCUMENTS, THE CONTRACTOR SHALL REPLACE AND/OR REPA R THE REJECTED WORK TO THE OWNER'S SATISFACTION WITHIN 24 HOURS.
3. THE MAINTENANCE PERIOD WILL NOT COMMENCE UNT L THE WORK HAS BEEN RE-INSPECTED BY THE OWNER AND FOUND TO BE ACCEPTABLE. AT THAT TIME, A WRITTEN NOTICE OF FINAL ACCEPTANCE W LL BE ISSUED BY THE OWNER, AND THE MAINTENANCE AND GUARANTEE PERIODS W LL COMMENCE.
4. CONTROLLER CHART: THE IRRIGATION CONTRACTOR SHALL PROV DE A 11" X 17" COLOR-CODED, LAM NATED COPY OF THE IRRIGATION LAYOUT AND PLACE IT IN THE CONTROLLER'S COVER. THE CONTROLLER CHART SHALL CLEARLY DEL NEATE THE AREAS COVERED BY EACH VALVE, US NG A SEPARATE COLOR FOR EACH ZONE.
5. TURN THE FOLLOW NG ITEMS IN TO THE OWNER UPON COMPLETION OF THE INSTALLATION:
   a. QUICK COUPLER KEYS (2)
   b. CONTROLLER MANUAL (1)
   c. CONTROLLER KEYS (2)
   d. A MIN IMUM OF (2) COP ES OF RECORD DRAWINGS. A RECORD DRAWING IS A RECORD OF ALL CHANGES THAT OCCURRED IN THE F ELD AND THAT ARE DOCUMENTED THROUGH CHANGE ORDERS, ADDENDA, OR CONTRACTOR/CONSULTANT DRAW NG MARKUPS.

W. REFER TO THE PLANT NG SPEC FICATIONS FOR ADDITIONAL CONDITIONS OF FINAL ACCEPTANCE AND START OF THE MAINTENANCE PERIOD.

X. WARRANTY
1. THE RRIGATION SYSTEM SUPPL ED AND INSTALLED SHALL BE WARRANTED (LABOR AND MATERIALS) TO REMA N OPERATIONAL FOR A PERIOD OF 12 MONTHS AFTER THE DATE OF FINAL ACCEPTANCE. DUR NG THIS PERIOD, THE CONTRACTOR SHALL ALSO REPA R ANY SETTLEMENT OF THE IRRIGATION TRENCHES.
2. BY THE END OF THE WARRANTY PERIOD, ANY IRRIGATION PART THAT IS EITHER NON-OPERATIONAL OR THAT IS OPERATING BELOW STANDARDS AS DETERM NED BY THE OWNER, SHALL BE REMOVED FROM THE SITE AND SHALL BE REPLACED. REPLACEMENTS SHALL BE OF THE SAME KIND AS SPEC F ED N THE IRRIGATION LEGEND, AND SHALL BE INSTALLED AS ORIGINALLY SPEC FIED.
3. IRRIGATION PARTS DAMAGED OR MIPA RED DUE TO ACTS OF GOD, VANDALISM, AND/OR THE OWNER'S MIPROPER MAINTENANCE SHALL NOT BE COVERED BY THIS WARRANTY.

Y. SHOULD THE PERMITTING JURISDICTION REQU RE AN IRRIGATION AUDIT, THE RRIGATION CONTRACTOR SHALL RETA N THE SERVICES OF A THIRD-PARTY CERT F ED LANDSCAPE RRIGATION AUDITOR, AT NO ADDITIONAL COST TO THE OWNER.

IRRIGATION LEGEND

SYMBOL	MANUFACTURER/MODEL
	RAIN BIRD R-VAN-STRIP 1806-SAM-P45 ,TURF ROTARY, 5`X15` (LCS AND RCS), 5`X30` (SST) HAND ADJUSTABLE MULTI-STREAM ROTARY W/ 1800 TURF SPRAY BODY ON 6.0" POP-UP, WITH CHECK VALVE AND 45 PSI IN-STEM PRESSURE REGULATOR. 1/2" NPT FEMALE THREADED INLET.
	RAIN BIRD R-VAN14 1806-SAM-P45, TURF ROTARY, 8`-14` 45°-270° AND 360° HAND ADJUSTABLE MULTI-STREAM ROTARY W/1800 TURF SPRAY BODY ON 6.0" POP-UP, WITH CHECK VALVE AND 45 PSI IN-STEM PRESSURE REGULATOR. 1/2" NPT FEMALE THREADED INLET.
	RAIN BIRD R-VAN18 1806-SAM-P45, TURF ROTARY, 13`-18` 45°-270° AND 360° HAND ADJUSTABLE MULTI-STREAM ROTARY W/1800 TURF SPRAY BODY ON 6.0" POP-UP, WITH CHECK VALVE AND 45 PSI IN-STEM PRESSURE REGULATOR. 1/2" NPT FEMALE THREADED INLET.
	RAIN BIRD R-VAN24 1806-SAM-P45, TURF ROTARY, 17`-24` 45°-270° AND 360° HAND ADJUSTABLE MULTI-STREAM ROTARY W/1800 TURF SPRAY BODY ON 6.0" POP-UP, WITH CHECK VALVE AND 45 PSI IN-STEM PRESSURE REGULATOR. 1/2" NPT FEMALE THREADED INLET.
	RAINBIRD 5004PCSAMR, ADJUSTABLE ARC 4" POP UP ROTARY HEAD, PART CIRCLE, #1.5 LA NOZZLE UNLESS NOTED OTHERWISE
	RAINBIRD XCZ-100-PRB-COM / 150-PRB-COM SERIES AUTOMATIC DRIP VALVE ASSEMBLY WITH 40 PSI PRESSURE REGULATOR XCZ-100-PRB-COM - 1" BALL VALVE WITH 1" PESB VALVE AND 1" PRESSURE REGULATING 40PSI QUICK-CHECK BASKET FILTER. 0.3GPM TO 20GPM.
	RAINBIRD PEB SERIES 1", 1-1/2", 2" PLASTIC INDUSTRIAL VALVES. LOW FLOW OPERATING CAPABILITY, GLOBE CONFIGURATION.
	AREA TO RECEIVE DRIPLINE RAINBIRD XFS-CV-06-12 SERIES DRIP TUBE IN SHRUB BED INSTALLED AT 2" DEPTH
	PIPE TRANSITION POINT ABOVE GRADE PIPE TRANSITION POINT FROM PVC LATERAL TO DRIP TUBING WITH RISER TO ABOVE GRADE INSTALLATION.
	ZURN / WILKINS 375XLB SERIES REDUCED PRESSURE TYPE BACKFLOW PREVENTOR INSTALLED PER CITY CODE WITH SAME SIZE BRONZE BALL VALVE INSTALLED ON THE UP-STREAM SIDE. MOUNTED IN STRONGBOX SMOOTH TOUCH ENCLOSURE.
	LASCO "V" SERIES SCH. 80 PVC TRUE UNION BALL VALVE, MAINLINE SIZE
M	IRRIGATION WATER METER AND TAP (BY OTHERS) SIZE AS NOTED ON THE PLAN
QC	RAINBIRD 33-DNP QUICK COUPLING VALVE WITH LOCKING PURPLE COVER AND 3/4" PVC BALL VALVE
C	RAINBIRD ESP12LXMEF2P SERIES AUTOMATIC WALL MOUNT CONTROLLER
R	RAINBIRD WR2-RFC RAIN / FREEZE SENSOR - CONFIRM SENSOR LOCATION WITH OWNERS REPRESENTATIVE
	1" MASTER VALVE MODEL # 100-EFB-CP WITH RAINBIRD FLOW SENSOR MODEL #FS100B SERIES
	IRRIGATION LATERAL LINE: CLASS 200 PVC
	IRRIGATION MAINLINE: CLASS 200 PVC
	IRRIGATION SLEEVES, SCH. 40 PVC, MIN. TWICE SIZE OF PIPE TO BE INSERTED

IRRIGATION NOTE:

1. L.I.C. SHALL SELECT R-VAN SPRAY NOZZLES FOR "HEAD-TO-HEAD" COVERAGE, ADJUSTED FOR NO OVERSPRAY ONTO WALLS AND WALKS. NO OVERSPRAY INTO STREETS IS PERMITTED.
2. ALL PIPE TO BE SIZED SUCH THAT FLOWS WILL NOT EXCEED VELOCITY OF 5 FPS

WATER CONSERVATION

IRRIGATION WATER CONSERVATION SHALL BE ACCOMPLISHED THROUGH THE FOLLOWING EFFORTS:

1. SEPARATE TURF / SHRUB ZONES FOR SCHEDULING ADJUSTMENT
2. NO OVERSPRAY ONTO PAVEMENT PERMITTED
3. USE OF RAIN SENSOR SHUT OFF OVER-RIDE DEVICE

LATERAL PIPE SIZE CHART

LATERAL PIPE SHALL BE SIZED TO ALLOW A MAXIMUM FLOW VELOCITY OF FIVE FEET PER SECOND ACCORDING TO THE FOLLOWING CHART:

FLOW IN GPM	LATERAL PIPE SIZE
UP TO 5 GPM	3/4" CLASS 200
6 - 10 GPM	3/4" CLASS 200
11 - 15 GPM	1" CLASS 200
16 - 28 GPM	1 1/4" CLASS 200
29 - 35 GPM	1 1/2" CLASS 200
36 - 54 GPM	2" CLASS 200
55 - 81 GPM	2 1/2" CLASS 200
82 - 120 GPM	3" CLASS 200

TRENCHING NOTE

NO CUTTING, FILLING, TRENCHING, ROOT DISTURBANCE, SOIL DISTURBANCE, OR CONSTRUCTION IMPACTS SHALL OCCUR CLOSER TO THE TRUNK THAN 1/2 THE RPZ RADIUS (UDC 35-523(i)(l) UNLESS DONE BY HAND.

VALVE KEY

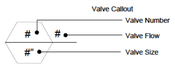

CRITICAL ANALYSIS

P.O.C. NUMBER: 01
Water Source Information: Irrigation Meter, By Others

FLOW AVAILABLE	
Water Meter Size:	1"
Flow Available:	30 gpm
PRESSURE AVAILABLE	
Static Pressure at POC (est.):	68.00 psi
Elevation Change:	NA
Service Line Size:	NA
Length of Service Line:	NA
Pressure Available:	65.00 psi
DESIGN ANALYSIS	
Maximum Station Flow:	11.0 gpm
Flow Available at POC:	30.0 gpm
Residual Flow Available:	19.0 gpm
Critical Station: 2	
Head Pressure Required:	35.0 psi
Lateral Loss:	3.4 psi
Loss through Valve:	2.2 psi
Pressure Req. at Critical Station:	40.60 psi
Loss for Main Line:	0.95 psi
Loss for Fittings 20%(Main Line):	0.19 psi
Loss for Master Valve:	1.00 psi
Loss for Backflow:	11.00 psi
Loss for Water Meter:	0.80 psi
Critical Station Pressure at POC:	54.54 psi
Pressure Available:	65.00 psi
Residual Pressure Available:	10.46 psi

National Presence. Local Expertise.
EVERGREEN DESIGN GROUP
800.680.8830
www.evergreendesigngroup.com
LANDSCAPE ARCHITECTURE
LAND PLANNING · IRRIGATION DESIGN

ALTAR GROUP
ARCHITECTURE
ENGINEERING
SEAL
STATE OF TEXAS
GEORGE ANAYA
26417
LICENSED IRRIGATOR
02 / 21 / 2025
CONSULTANT

TAKE 5 OIL CHANGE
PROTOTYPE: 3 BAY
5331 WALZEM ROAD
SAN ANTONIO, TX 78218

REV	DATE	DESCRIPTION
1	01/29/24	ISSUE FOR PERMIT
2	2/21/25	RE-ISSUE FOR PERMIT

DRAWN BY: GA
CHECKED BY: AM
ARCH. PROJECT NO.: DB24-023
SHEET NAME: IRRIGATION SPECIFICATIONS
SHEET NUMBER: LI-3

SITE NOTES

1. REFER TO CIVIL DRAWINGS FOR SITE. CONCRETE WALKS, PAVING, BERMS, LANDSCAPING AND IRRIGATION.
2. REFER TO CIVIL DRAWINGS FOR SITE GRADING, DRAINAGE, CATCH BASINS, PAVING DETAILS, SITE UTILITIES, CURB AND GUTTER SWALES, FIRE HYDRANT LOCATIONS AND HORIZONTAL CONTROL DIMENSIONS.
3. REFER TO CIVIL DRAWINGS FOR POINT OF CONNECTIONS TO OFF-SITE UTILITIES. CONTRACTOR TO VERIFY ACTUAL UTILITY LOCATIONS.
4. ALL DIMENSIONS ON SITE PLAN ARE TO BE FACE OF CONCRETE WALL, FACE OF CONCRETE CURB, PROPERTY LINE, OR CENTERLINE OF PARKING STALL, UNLESS NOTED OTHERWISE.
5. FIRE HYDRANTS SHALL BE INSTALLED IN ACCORDANCE WITH THE LOCAL FIRE DEPARTMENT STANDARDS.
6. ALL PARKING STALL STRIPING SHALL BE PER LOCAL JURISDICTION STANDARDS.
7. CONCRETE WALK SHALL RECEIVE EXPANSION JOINTS AT 15'-0" O.C. MAX. AND CONTROL JOINTS AT 5'-0" O.C. MAX. BETWEEN EXPANSION JOINTS, UNLESS NOTED OTHERWISE. REFER TO HARDSCAPE PLAN ON SHEET A01.60.

GENERAL NOTES

1. ALL WORK AND MATERIALS SHALL BE IN COMPLIANCE WITH APPLICABLE FEDERAL, STATE AND LOCAL BUILDING CODES, REGULATIONS, ORDINANCES AND STANDARDS INCLUDING ADA AND OR OTHER ACCESSIBILITY CODES.
2. THE CONSTRUCTION DRAWINGS INCLUDING SPECIFICATIONS, ADDENDA, BULLETINS, ETC., ARE PROVIDED TO ILLUSTRATE THE DESIGN AND GENERAL TYPE OF CONSTRUCTION DESIRED AND ARE INTENDED TO IMPLY THE FINEST QUALITY OF CONSTRUCTION MATERIAL AND WORKMANSHIP THROUGHOUT.
3. THE CONSTRUCTION DRAWINGS ARE NOT TO BE SCALED. FOR INFORMATION CONCERNING EXISTING CONDITIONS, ETC., VERIFICATION MUST BE DONE IN THE FIELD. LARGE SCALE DRAWINGS HAVE PRECEDENCE OVER SMALL SCALE DRAWINGS.
4. THE CONTRACTOR SHALL VISIT THE SITE AND FAMILIARIZE HIMSELF/HERSELF WITH THE EXISTING CONDITIONS AND REVIEW AND UNDERSTAND THE REQUIREMENTS OF THE CONTRACT DOCUMENTS. THE CONTRACTOR SHALL VERIFY ALL DIMENSIONS, ELEVATIONS, AND CONDITIONS PRIOR TO COMMENCEMENT OF ANY WORK AND SHALL NOTIFY THE ARCHITECT OF ANY DISCREPANCIES. THE CONTRACTOR SHALL BE RESPONSIBLE FOR ALL CORRECTIONS AND REPAIRS REQUIRED DUE TO HIS/HER FAILURE TO DO SO.
5. PRIOR TO COMMENCEMENT OF ANY CONSTRUCTION, THE CONTRACTOR SHALL VERIFY EXISTENCE AND LOCATION OF ALL EXISTING ABOVE AND BELOW GRADE, UTILITIES, INCLUDING SANITARY SEWER, STORM SEWER, WATER, GAS, ELECTRICAL, TELEPHONE, ETC. ANY DISCREPANCIES IN UTILITY LOCATIONS SHALL BE BROUGHT TO THE IMMEDIATE ATTENTION OF THE ARCHITECT.
6. THE CONTRACTOR SHALL ASSUME SOLE AND COMPLETE RESPONSIBILITY FOR JOB SITE CONDITIONS AND COMPLY WITH SAFETY REGULATIONS AND RESTRICTIONS AS REQUIRED FOR WORKERS AND PEDESTRIAN PROTECTION DURING THE COURSE OF CONSTRUCTION ON THIS PROJECT. PROVIDE PROTECTION AS REQUIRED TO PREVENT ANY DAMAGE TO EXISTING CONSTRUCTION WITHIN AND ADJACENT TO JOB SITE. WHERE DAMAGE OCCURS, THE CONTRACTOR SHALL REPAIR OR REPLACE DAMAGED AREA AND/OR MATERIAL AS REQUIRED TO THE OWNER'S APPROVAL AT NO ADDITIONAL COST. THIS REQUIREMENT SHALL APPLY CONTINUOUSLY AND NOT BE LIMITED TO NORMAL WORKING HOURS.
7. THE ARCHITECT SHALL NOT HAVE CONTROL OR CHARGE OF AND SHALL NOT BE RESPONSIBLE FOR CONSTRUCTION MEANS, METHODS, TECHNIQUES, SEQUENCE ON PROCEDURE, OR FOR SAFETY PRECAUTIONS AND PROGRAMS IN CONNECTION WITH THE WORK, ALL OF WHICH SHALL BE THE SOLE RESPONSIBILITY OF THE CONTRACTOR.
8. THE DESIGN ADEQUACY, AND SAFETY OF ERECTION BRACING, SHORING, TEMPORARY SUPPORTS, ETC. DURING DEMOLITION AND/OR CONSTRUCTION IS THE SOLE RESPONSIBILITY OF THE CONTRACTOR, AND HAS NOT BEEN CONSIDERED BY THE STRUCTURAL ENGINEER OR THE ARCHITECT.
9. ALL WORK NOTED "N.I.C." OR "NOT IN CONTRACT" IS TO BE ACCOMPLISHED BY A CONTRACTOR OTHER THAN THE CONTRACTOR AND IS NOT TO BE PART OF THE CONSTRUCTION AGREEMENT. THE GENERAL CONTRACTOR SHALL COORDINATE WITH "OTHER" CONTRACTORS PER REQUIREMENTS ESTABLISHED BY THE OWNER AND / OR THE TENANT.
10. THE CONTRACTOR AND ALL SUBCONTRACTORS ARE RESPONSIBLE FOR EXAMINING CONTRACT DOCUMENTS, FIELD CONDITIONS, AND CONFIRMING THAT WORK IS BUILDABLE AS SHOWN BEFORE PROCEEDING WITH CONSTRUCTION. IF THERE ARE ANY QUESTIONS REGARDING THESE OR OTHER COORDINATION ITEMS, THE CONTRACTOR IS RESPONSIBLE FOR OBTAINING CLARIFICATION FROM THE ARCHITECT BEFORE PROCEEDING WITH WORK IN QUESTION OR RELATED WORK.
11. THE CONTRACTOR SHALL MAINTAIN RECORD DOCUMENTS OF CONSTRUCTION CHANGES ("AS-BUILT DRAWINGS") AND SHALL PROVIDE SAID DOCUMENTATION TO THE ARCHITECT & THE OWNER UPON COMPLETION OF CONSTRUCTION - NO EXCEPTION ALLOWED.
12. DURING CONSTRUCTION SITE VISITS THE CONTRACTOR IS RESPONSIBLE FOR KEEPING MEETING MINUTES AND SHALL PROVIDE COPIES OF RFI LOGS, UPDATED CONSTRUCTION SCHEDULE WHICH SHALL ALSO INCLUDED AN ITEMIZED THREE (3)THREE WEEK OUTLOOK SCHEDULE.
13. THE CONTRACTOR IS SOLELY RESPONSIBLE TO COORDINATE WITH ALL SUBCONTRACTORS PER REQUIREMENTS ESTABLISHED BY THE OWNER, THE TENANT, OR BOTH, WHICH ARE UNDER SEPARATE CONTRACT WITH THE OWNER, OR THE TENANT, OR BOTH.
14. STRUCTURAL, MECHANICAL, ELECTRICAL, PLUMBING, OTHER DRAWINGS, AND JOB SPECIFICATIONS ARE SUPPLEMENTARY TO ARCHITECTURAL CONSTRUCTION DRAWINGS. ANY DISCREPANCY BETWEEN THESE DOCUMENTS SHALL BE IMMEDIATELY BROUGHT TO THE ATTENTION OF THE ARCHITECT FOR CLARIFICATION.
15. THE INTENT OF DRAWINGS AND SPECIFICATIONS IS TO INCLUDE ALL LABOR, MATERIALS AND SERVICES NECESSARY FOR THE COMPLETION OF ALL WORK SHOWN, DESCRIBED, OR REASONABLY IMPLIED, BUT NOT LIMITED TO THAT EXPLICITLY INDICATED IN THE CONTRACT DOCUMENTS.
16. INSTALL ALL MANUFACTURED ITEMS, MATERIALS, AND EQUIPMENT IN STRICT ACCORDANCE WITH THE MANUFACTURER'S SPECIFICATIONS, UNLESS NOTED OTHERWISE.
17. THE CONTRACTOR SHALL PROVIDE ALL NECESSARY BLOCKING IN WALLS FOR SUPPORT OF ALL EQUIPMENT, SHELVING, ACCESSORIES, SIGNAGE, AND OTHER DEVICES REQUIRED.
18. ALL PENETRATIONS SHALL RECEIVE CAULKING TO SEAL ANY TYPE OF ENERGY LOSS.
19. THE CONTRACTOR SHALL VERIFY AND COORDINATE ALL APPLICABLE DIMENSIONS OF FIXTURES AND EQUIPMENT SUPPLIED AND/OR INSTALLED BY OTHERS.
20. ANY WORK INSTALLED IN CONFLICT WITH THE CONSTRUCTION DRAWINGS, WITHOUT THE PRIOR APPROVAL OF THE OWNER AND THE ARCHITECT SHALL BE CORRECTED AT THE CONTRACTOR'S EXPENSE.
21. THE CONTRACTOR SHALL NOTIFY THE ARCHITECT IMMEDIATELY OF ANY SPECIFIED MATERIALS OR EQUIPMENT WHICH ARE EITHER UNAVAILABLE OR THAT WILL CAUSE A DELAY IN THE CONSTRUCTION COMPLETION SCHEDULE. THE CONTRACTOR SHALL SUBMIT CONFIRMATIONS OF DELIVERY DATES FOR ORDERS OF MATERIALS AND EQUIPMENT HAVING LONG LEAD TIMES.
22. ALL REQUESTS FOR SUBSTITUTIONS OF ITEMS SPECIFIED SHALL BE SUBMITTED IN WRITING AND WILL BE CONSIDERED ONLY IF BETTER SERVICE FACILITIES, A MORE ADVANTAGEOUS DELIVERY DATE, OR A LOWER PRICE WITH CREDIT TO THE OWNER/TENANT WILL BE PROVIDED WITHOUT SACRIFICING QUALITY, APPEARANCE, AND FUNCTION. UNDER NO CIRCUMSTANCES WILL THE ARCHITECT BE REQUIRED TO PROVE THAT A PRODUCT PROPOSED FOR SUBSTITUTION IS OR IS NOT OF EQUAL QUALITY TO THE PRODUCT SPECIFIED.
23. PROJECT SPECIFICATIONS ARE AN INTEGRAL PART OF THESE PLANS. SUBSTITUTIONS FOR SPECIFIED MATERIALS REQUIRE THE WRITTEN APPROVAL FROM THE ARCHITECT.
24. UNLESS OTHERWISE NOTED IN THE CONTRACT DOCUMENTS, THE CONTRACTOR SHALL SUBMIT ONE (1) SET OF SHOP DRAWINGS. SHOP DRAWINGS SHOULD INCLUDE DETAILED, FABRICATION AND ERECTION DRAWINGS, SETTING DRAWINGS, DIAGRAMMATIC DRAWINGS, AND MATERIAL SCHEDULES. LOCATION AND ORIENTATION OF ALL ITEMS SHOULD BE CLEARLY INDICATED. BEGIN FABRICATION OF SHOP ITEMS AFTER RECEIVING THE ARCHITECT'S OR THE DESIGNER'S APPROVAL OF SHOP DRAWINGS.
25. THE ARCHITECT'S REVIEW OF SHOP DRAWINGS SHALL NOT RELIEVE THE CONTRACTOR OR THE SUBCONTRACTOR FROM RESPONSIBILITY FOR DEVIATIONS FROM THE DRAWINGS OR SPECIFICATIONS UNLESS HE HAS, IN WRITING, AND BROUGHT TO THE ATTENTION OF THE ARCHITECT SUCH DEVIATIONS AT THE TIME OF THE SUBMISSION, NOR SHALL IT RELIEVE HIM / HER (CONTRACTOR) FROM RESPONSIBILITY FOR ERRORS OF ANY SORT IN THE SHOP DRAWINGS.
26. THE GENERAL CONTRACTOR SHALL BE RESPONSIBLE FOR OBTAINING ALL REQUIRED BUILDING PERMITS PRIOR TO STARTING CONSTRUCTION.
27. PRIOR TO THE ISSUANCE OF A BUILDING PERMIT, THE APPLICANT SHALL HAVE EVIDENCE OF CURRENT WORKMAN'S COMPENSATION INSURANCE COVERAGE ON FILE WITH THE STATE LABOR DEPARTMENT IN COMPLIANCE WITH CURRENT LABOR CODES.
28. PROVIDE CONTINUOUS INSPECTIONS AS SET FORTH IN STATE AND LOCAL CODES AND PER CONTRACT DOCUMENTS AS NEEDED.
29. PRIOR TO THE ISSUANCE OF FINAL CERTIFICATE OF OCCUPANCY FOR THIS PROJECT; THE CONTRACTOR SHALL SUBMIT A SIGNED CERTIFICATE TO THE DEPARTMENT OF BUILDING AND SAFETY STATING THAT ALL WORK HAS BEEN PERFORMED AND MATERIALS INSTALLED ACCORDING TO THE PLANS AND SPECIFICATIONS AFFECTING NON-RESIDENTIAL ENERGY.
30. ALL CONSTRUCTION RELATED PARKING MUST BE ACCOMMODATED ON-SITE. NO CONSTRUCTION RELATED PARKING IS PERMITTED OF-SITE.
31. REFER TO STRUCTURAL SHEETS FOR LIST OF REQUIRED STRUCTURAL SPECIAL INSPECTIONS.
32. PROVIDE PEDESTRIAN OR VEHICULAR PROTECTION BARRICADES, TEMPORARY GUARD RAILS, AND CANOPIES NECESSARY FOR PEDESTRIAN AND VEHICULAR SAFETY AS REQUIRED BY THE LOCAL AUTHORITIES, SECTION 3306, IBC.
33. THE CONTRACTOR SHALL VERIFY AND PROVIDE IN BID, ALL "FIRE LANE" REQUIREMENTS (SIGNS, LETTERS, PAINTING, ETC.) AS REQUIRED BY THE FIRE DEPARTMENT.
34. REFER TO CIVIL DRAWINGS FOR SITE DIMENSIONS AND INFORMATION (HORIZONTAL CONTROL PLAN), WHERE APPLICABLE.
35. PROVIDE PIPE GUARDS AT NEW UTILITY EQUIPMENT AS REQUIRED BY UTILITY AND GOVERNING AGENCIES. VERIFY EXACT NUMBER TYPE AND LOCATION WITH UTILITY COMPANIES PRIOR TO BID AND INCLUDE ALL COST IN BID (IF APPLICABLE).
36. ALL CONSTRUCTION VEHICLES SHALL BE EQUIPPED WITH THE MOST MODERN NOISE MUFFLERS AVAILABLE AND ALL ENGINES SHALL BE KEPT PROPERLY TUNED.
37. THE CONTRACTOR SHALL BE RESPONSIBLE FOR ALL TRAFFIC CONTROL DURING CONSTRUCTION.
38. THE CONTRACTOR TO PROVIDE EFFECTIVE MEANS OF DUST CONTROL FOR THE SITE, SO AS NOT TO CREATE UNFAVORABLE CONDITIONS THROUGHOUT THE DURATION OF CONSTRUCTION AND MEET THE REQUIREMENTS OF LOCAL CODES AND ORDINANCES. THE CONTRACTOR SHALL BE RESPONSIBLE FOR OBTAINING REQUIRED PERMITS.
39. WHEN THE ARCHITECT'S, CIVIL ENGINEER'S, CITY AND/OR COUNTY STANDARDS DIFFER, THE MORE RESTRICTIVE SHALL PREVAIL. ALWAYS INFORM CONFLICTING INFORMATION TO THE ARCHITECT.
40. THE CONTRACTOR SHALL BE RESPONSIBLE FOR SET-UP AND COORDINATION OF ALL THE UTILITY SERVICES FOR THE PROJECT AND SHALL ALSO OBTAIN FINAL SITE ADDRESS.
41. FOR EXTENT OF OFFSITE WORK, REFER TO CIVIL DRAWINGS, IF APPLICABLE.
42. ALL MEANS OF EGRESS AND FIRE PROTECTION SHALL BE MAINTAINED AT ALL TIMES AND ANY SHUT DOWN OF LIFE SAFETY OR BUILDING SYSTEMS SHALL BE APPROVED AND COORDINATED IN ADVANCE WITH THE OWNER AND THE LOCAL BUILDING DEPARTMENT
43. THE CONTRACTOR IS RESPONSIBLE FOR ALL SITE CUT & FILL TO ATTAIN FINISH GRADES AS INDICATED ON THESE DRAWINGS. THE CONTRACTOR SHALL INCLUDE THE COST OF ANY TOPSOIL REQUIRED IN ADDITION TO THAT ON SITE, AT THE TIME OF THE PRE-BID MEETING, IN BASE BID.
44. THE CONTRACTOR SHALL INCLUDE THE COST OF POWER COMPANY ELECTRICAL TRANSFORMER, PAD, PRIMARY & SECONDARY CONDUITS, AND SECONDARY CABLING IN BASE BID (WHEN APPLICABLE).
45. SIGNS, EXCEPT AS INDICATED ON CIVIL DRAWINGS AND ADA TOILET ROOM SIGNS, ARE PROVIDED BY THE OWNER'S SIGN CONTRACTOR. THE OWNER'S SIGN VENDOR WILL PROVIDE MONUMENT SIGN BASE (CONCRETE, STONE, BRICK, ETC.) IF PROJECT REQUIRES DECORATIVE BASE REFER TO DRAWINGS. THE GENERAL CONTRACTOR SHALL PROVIDE ROUGH-IN & FINAL CONNECTION.
46. UPON COMPLETION OF PROJECT, THE CONTRACTOR SHALL OBTAIN ALL FINAL INSPECTIONS AS REQUIRED BY THE LOCAL JURISDICTIONS AND FURNISH TO THE OWNER EVIDENCE OF ALL SUCH INSPECTIONS AND CERTIFICATES OF OCCUPANCY.
47. WHERE EXISTING TENANTS / BUSINESSES ARE ADJACENT TO THE JOB SIT E/ TENANT, THE CONTRACTOR SHALL MINIMIZE CONSTRUCTION NOISE - EXTREME NOISE CONSTRUCTION SHALL OCCUR AT NON-TYPICAL BUSINESS HOURS. THE CONTRACTOR SHOULD NOTIFY BUILDING REPRESENTATIVE(S) OF SPECIAL CIRCUMSTANCES IN ADVANCE PRIOR TO WORK.
48. THE CONTRACTOR AT HIS / HER OWN EXPENSE, SHALL KEEP THE PROJECT AND SURROUNDING AREA FREE FROM DUST AND DEBRIS. THE WORK SHALL BE IN CONFORMANCE WITH THE AIR AND WATER POLLUTION CONTROL STANDARDS AND REGULATIONS OF THE STATE DEPARTMENT OF HEALTH.
49. CONSTRUCTION DEBRIS AND WASTES SHALL BE DEPOSITED AT AN APPROPRIATE SITE. THE CONTRACTOR SHALL INFORM THE BUILDING REPRESENTATIVE(S) OF THE LOCATION OF DISPOSAL SITES.
50. THE CONTRACTOR SHALL BE RESPONSIBLE FOR THE GENERAL CLEANING OF THE JOB AFTER ITS COMPLETION. WHERE APPLICABLE, CLEANING SHALL INCLUDE, BUT NOT BE LIMITED TO, THE EXTERIOR AND THE INTERIOR OF THE BUILDING, THE PATH OF TRAVEL TO THE JOB SITE, PARKING LOTS, ELEVATORS, LOBBIES AND CORRIDOR CARPETS.
51. THE CONTRACTOR SHALL PROVIDE PEDESTRIAN PROTECTION, WHERE REQUIRED PER STATE AND LOCAL CODES.
52. WHERE TRENCHES OR EXCAVATIONS 5'-0" OR MORE IN DEPTH ARE REQUIRED, OBTAIN ISSUANCE OF A BUILDING OR GRADING PERMIT.
53. NO HAZARDOUS MATERIALS SHALL BE USED OR STORED WITHIN THE BUILDING WHICH DOES NOT COMPLY WITH THE LOCAL FIRE AUTHORITY AND THE STATE & COUNTY REQUIREMENTS.
54. THE CONTRACTOR SHALL BE RESPONSIBLE FOR BLOCKING OFF SUPPLY AND RETURN AIR GRILLES, DIFFUSERS & DUCTS TO KEEP DUST FROM ENTERING INTO BUILDING AIR DISTRIBUTION SYSTEMS.
55. THE BUILDINGS UNDERGOING CONSTRUCTION, ALTERATION OR DEMOLITION SHALL BE DONE SO IN ACCORDANCE WITH THE STATE & LOCAL CODES.

PROJECT NOTES

NOTICE TO THE APPLICANT/OWNER/OWNER'S AGENT/ARCHITECT OR ENGINEER OF RECORD: BY USING THIS PERMITTED CONSTRUCTION DRAWINGS FOR CONSTRUCTION/INSTALLATION OF THE WORK SPECIFIED HEREIN, YOU AGREE TO COMPLY WITH THE REQUIREMENTS OF CITY OF SAN ANTONIO FOR SPECIAL INSPECTIONS, STRUCTURAL OBSERVATIONS, CONSTRUCTION MATERIAL TESTING AND OFF-SITE FABRICATION OF BUILDING COMPONENTS CONTAINED IN THE STATEMENT OF SPECIAL INSPECTIONS AND, AS REQUIRED BY THE TEXAS CONSTRUCTION CODE.

NOTICE TO THE CONTRACTOR / BUILDER / INSTALLER / SUB-CONTRACTOR / OWNER-BUILDER: BY USING THIS PERMITTED CONSTRUCTION DRAWINGS FOR CONSTRUCTION /INSTALLATION OF THE WORK SPECIFIED HEREIN, YOU ACKNOWLEDGE AND ARE AWARE OF THE REQUIREMENTS OF CITY OF SAN ANTONIO FOR SPECIAL INSPECTIONS, STRUCTURAL OBSERVATIONS, CONSTRUCTION MATERIAL TESTING AND OFF-SITE FABRICATION OF BUILDING COMPONENTS, CONTAINED IN THE STATEMENT OF SPECIAL INSPECTIONS AND, AS REQUIRED BY THE TEXAS BUILDING CODES.

1. THE SPECIAL INSPECTOR MUST BE CERTIFIED BY THE CITY OF SAN ANTONIO, DEVELOPMENT SERVICES, IN THE CATEGORY OF WORK REQUIRED TO HAVE SPECIAL INSPECTION.
2. THE CONSTRUCTION MATERIALS TESTING LABORATORY MUST BE APPROVED BY THE CITY OF SAN ANTONIO, DEVELOPMENT SERVICES, FOR TESTING MATERIALS, SYSTEMS, COMPONENTS, AND EQUIPMENTS.
3. FABRICATOR MUST BE APPROVED BY THE CITY OF SAN ANTONIO, DEVELOPMENT SERVICES FOR THE FABRICATION OF MEMBERS AND ASSEMBLIES ON THE PREMISES OF THE FABRICATOR'S SHOP.
4. FABRICATOR SHALL SUBMIT AN "APPLICATION TO PERFORM OFF-SITE FABRICATION" TO THE INSPECTION SERVICES DIVISION FOR APPROVAL PRIOR TO COMMENCEMENT OF FABRICATION.
5. FABRICATOR SHALL SUBMIT A "CERTIFICATE OF COMPLIANCE FOR OFF-SITE FABRICATION" TO THE INSPECTION SERVICES DIVISION PRIOR TO ERECTION OF FABRICATED ITEMS AND ASSEMBLIES.
6. THE SPECIAL INSPECTIONS IDENTIFIED ON PLANS ARE, IN ADDITION TO, AND NOT A SUBSTITUTE FOR, THOSE INSPECTIONS REQUIRED TO BE PERFORMED BY CITY'S BUILDING INSPECTOR.

BID NOTES

1. THE ARCHITECT ASSUMES NO RESPONSIBILITY FOR THE COMPLETENESS OF PLANS FOR BID PURPOSES PRIOR TO THE ISSUANCE OF THE BUILDING PERMIT.
2. THE INTENT OF THESE DOCUMENTS IS TO INCLUDE ALL LABORS, MATERIALS AND EQUIPMENT, AND TRANSPORTATION NECESSARY FOR COMPLETE AND PROPER EXECUTION OF THE WORK.
3. AN GENERAL CONTRACTOR AND HIS SUB-CONTRACTORS SHALL THOROUGHLY FAMILIARIZE THEMSELVES WITH THESE CONTRACT DOCUMENTS AND SHALL VERIFY THE EXISTING SITE AND CONDITIONS PRIOR TO SUBMITTING A BID. ALL SUB-CONTRACTORS SHALL PROVIDE ALL LABOR, SUPERVISION, AND MATERIALS OF EVERY TYPE WHICH MAY BE NECESSARY FOR A SUCCESSFUL COMPLETION OF ALL WORK TO BE PERFORMED IN A GOOD AND WORKMANLIKE MANNER ACCORDING TO THE TRUE INTENT AND MEANING OF DRAWINGS AND SPECIFICATIONS.
4. THIS ARCHITECT AND HIS PROFESSIONAL CONSULTANTS WILL NOT HAVE CONTROL OF AND WILL NOT BE RESPONSIBLE FOR CONSTRUCTION MEANS, METHODS, TECHNIQUES, SEQUENCES, PROCEDURES, OR SAFETY PRECAUTIONS AND PROGRAMS IN CONNECTION WITH THE WORK ON THIS PROJECT OR FOR ACTS OR OMISSIONS OF THE CONTRACTOR, SUB-CONTRACTOR, OR ANY OTHER PERSONS PERFORMING ANY OF THE WORK ON THIS SITE, NOR FOR THE FAILURE OF ANY OF THEM TO CARRY OUT THE WORK IN ACCORDANCE WITH THE INTENT OF THE CONTRACT AND CONSTRUCTION DOCUMENTS.
5. GENERAL CONTRACTOR IS RESPONSIBLE FOR COORDINATING ALL WORK WITH ALL TRADES IN ORDER TO AVOID INTERFERENCE AND OMISSIONS.
6. IT IS THE RESPONSIBILITY OF THE CONTRACTOR TO NOTIFY THE ARCHITECT IN WRITING OF ANY CONFLICTS, ERRORS, AMBIGUITIES, OR DISCREPANCIES THAT THE CONTRACTOR HAS DISCOVERED IN THE CONTRACT DOCUMENTS OR SITE CONDITIONS. THE ARCHITECT WILL ISSUE A WRITTEN RESPONSE.
7. GENERAL CONTRACTOR SHALL AMEND AND MAKE GOOD AT HIS OWN COST ANY DEFECTS OR OTHER FAULTS IN HIS SUB-CONTRACTOR WORKMANSHIP AND/OR SUPPLIED MATERIALS.
8. EACH BIDDER REPRESENTS THAT HE HAS VISITED THE SITE, PERFORMED INVESTIGATIONS AND VERIFICATIONS AS HE DEEMS NECESSARY AND FAMILIARIZE HIMSELF WITH THE LOCAL CONDITIONS UNDER WHICH THE WORK IS TO BE PERFORMED AND WILL BE RESPONSIBLE FOR ANY AND ALL ERRORS IN HIS PROPOSAL RESULTING FROM HIS FAILURE TO DO SO.
9. REFER TO THE SPECIFICATIONS FOR ADDITIONAL INFORMATION.
10. BID SHALL INCLUDE ALL MATERIALS, PRODUCTS, ETC. INDICATED IN THESE CONTRACT DOCUMENTS. SUBSTITUTIONS OF ANY MATERIAL, PRODUCT, ETC. IS NOT ACCEPTABLE WITHOUT WRITTEN APPROVAL FROM THE ARCHITECT AND COULD BE SUBJECT TO BID DISQUALIFICATION. REFER TO SPECIFICATIONS FOR SUBSTITUTION PROCEDURE.

ALTAR GROUP

ARCHITECTURE
ENGINEERING

SEAL:

REGISTERED ARCHITECT
JOHN D. LINTON
21410
STATE OF TEXAS

02/21/25

CONSULTANT:

TAKE 5 OIL CHANGE
PROTOTYPE: 3 BAY
5331 WALZEM ROAD
SAN ANTONIO, TX 78218

REV	DATE	DESCRIPTION
1	11/26/24	ISSUE FOR PERMIT
2	02/21/25	RE-ISSUE FOR PERMIT

DRAWN BY: RM
CHECKED BY: RR
ARCH. PROJECT NO.: DB24-023
SHEET NAME: GENERAL NOTES
SHEET NUMBER: A0.01

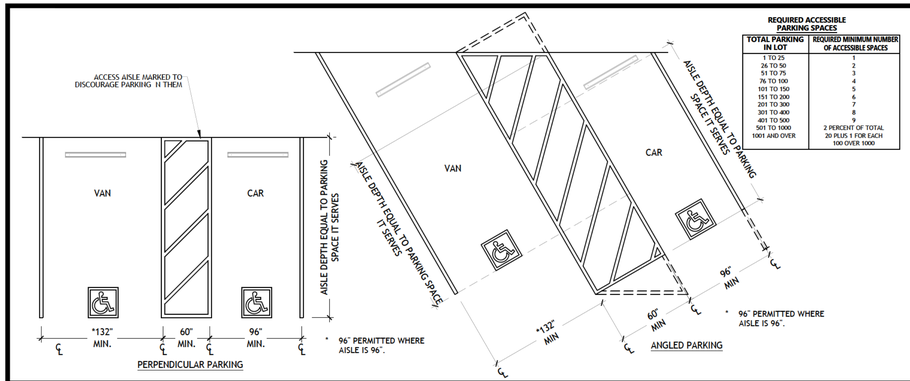

REQUIRED ACCESSIBLE PARKING SPACES

TOTAL PARKING IN LOT	REQUIRED MINIMUM NUMBER OF ACCESSIBLE SPACES
1 TO 25	1
26 TO 50	2
51 TO 75	3
76 TO 100	4
101 TO 150	5
151 TO 200	6
201 TO 300	7
301 TO 400	8
401 TO 500	9
501 TO 1000	2 PERCENT OF TOTAL
1001 AND OVER	20 PLUS 1 FOR EACH 100 OVER 1000

ACCESSIBLE PARKING SPACE NOTES:

1. CAR PARKING SPACES SHALL BE 96 NCHES WIDE MINIMUM AND VAN PARKING SPACES SHALL BE 132 INCHES WIDE MINIMUM, SHALL BE MARKED TO DEFINE THE WIDTH, AND SHALL HAVE AN ADJACENT ACCESS AISLE. VAN PARKING SPACES SHALL BE PERMITTED TO BE 96 INCHES WIDE MINIMUM WHERE THE ACCESS AISLE IS 96 INCHES W DE MINIMUM.
2. ACCESS AISLES SHALL ADJOIN AN ACCESSIBLE ROUTE. TWO PARKING SPACES SHALL BE PERMITTED TO SHARE A COMMON ACCESS AISLE
3. ACCESS AISLES SERVING CAR AND VAN PARK NG SPACES SHALL BE 60 NCHES WIDE MINIMUM.
4. ACCESS AISLES SHALL EXTEND THE FULL REQU RED LENGTH OF THE PARKING SPACES THEY SERVE.
5. ACCESS AISLES SHALL BE MARKED TO DISCOURAGE PARK NG IN THEM.
6. ACCESS AISLES SHALL NOT OVERLAP THE VEHICULAR WAY. ACCESS AISLES SHALL BE PERMITTED TO BE PLACED ON EITHER SIDE OF THE PARK NG SPACE EXCEPT FOR VAN PARKING SPACES WHICH SHALL HAVE ACCESS AISLES LOCATED ON THE PASSENGER SIDE OF THE PARKING SPACES.
7. ACCESS AISLES SHALL BE AT THE SAME LEVEL AS THE PARKING SPACES THEY SERVE. CHANGES IN LEVEL ARE NOT PERMITTED. SLOPES NOT STEEPER THAN 1:48 SHALL BE PERMITTED.
8. PARKING SPACES, ACCESS AISLES AND VEHICULAR ROUTES SERV NG THEM SHALL PROVIDE A VERTICAL CLEARANCE OF 98 INCHES MINIMUM.
9. PARKING SPACES AND ACCESS AISLES SHALL BE DESIGNED SO THAT CARS AND VANS, WHEN PARKED, CANNOT OBSTRUCT THE REQUIRED CLEAR W DTH OF ADJACENT ACCESSIBLE ROUTES

ACCESSIBLE PARKING SPACES

N.T.S. | 502 | 07.08.20 | **12**

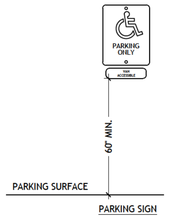

SIGNAGE AND IDENTIFICATION OF SPACE NOTES:

1. PARKING SPACE IDENTIFICATION SIGNS SHALL INCLUDE THE INTERNATIONAL SYMBOL OF ACCESSIBILITY COMPLYING WITH SECTION 703.6.3.1.
2. SIGNS IDENTIFYING VAN PARKING SPACES SHALL CONTAIN ADDITIONAL LANGUAGE OR AN ADDITIONAL SIGN WITH THE DESIGNATION "VAN ACCESSIBLE."
3. SIGNS SHALL BE 60 INCHES MINIMUM ABOVE THE FINISH FLOOR OR GROUND SURFACE MEASURED TO THE BOTTOM OF THE SIGN.

ACCESSIBLE PARKING SIGNS

N.T.S. | 502 7 | 07.08.20 | **4**

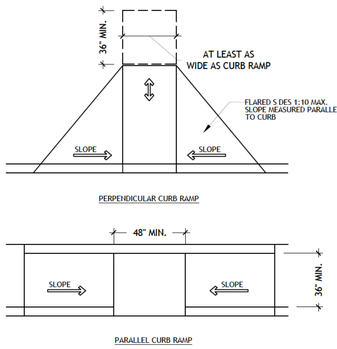

CURB RAMP NOTES:

1. RAMP RUNS SHALL HAVE A RUNNING SLOPE NOT STEEPER THAN 1:12. WHERE PROV DED, CURB RAMP FLARES SHALL NOT BE STEEPER THAN 1:10
2. CURB RAMPS AND THE FLARED S DES OF CURB RAMPS SHALL BE LOCATED SO THAT THEY DO NOT PROJECT NTO VEHICULAR TRAFFIC LANES, PARKING SPACES, OR PARKING ACCESS AISLES. CURB RAMPS AT MARKED CROSSINGS SHALL BE WHOLLY CONTAINED WITH N THE MARKINGS, EXCLUDING ANY FLARED SIDES.
3. THE CLEAR WIDTH OF CURB RAMP RUNS (EXCLUDING ANY FLARED SIDES), SHALL BE 36 INCHES MINIMUM.
4. LANDINGS SHALL BE PROVIDED AT THE TOPS OF CURB RAMPS. THE LANDING CLEAR LENGTH SHALL BE 36 NCHES M NIMUM. THE LANDING CLEAR WIDTH SHALL BE AT LEAST AS WIDE AS THE CURB RAMP. EXCLUDING ANY FLARED SIDES LEAD NG TO THE LANDING. THE SLOPE OF THE LANDING IN ALL D RECTIONS SHALL BE 1:48 MAXIMUM.
5. THE CROSS SLOPE OF CURB RAMPS SHALL BE 1:48 MAXIMUM.
6. COUNTER SLOPES OF ADJO N NG GUTTERS, AND ROAD SURFACES IMMEDIATELY ADJACENT TO THE CURB RAMP SHALL NOT BE STEEPER THAN 1:20. THE ADJACENT SURFACES AT TRANSITIONS AT CURB RAMPS TO WALKS, GUTTERS, AND STREETS SHALL BE AT THE SAME LEVEL.

CURB RAMPS

N.T.S. | 406 | 07.08.20 | **15**

CHANGES IN LEVEL NOTES:

1. CHANGES IN LEVEL OF 1/4 INCH HIGH MAXIMUM SHALL BE PERMITTED TO BE VERTICAL AND WITHOUT EDGE TREATMENT.
2. CHANGES IN LEVEL BETWEEN 1/4 INCH HIGH MINIMUM AND 1/2 INCH HIGH MAXIMUM SHALL BE BEVELED WITH A SLOPE NOT STEEPER THAN 1:2.
3. CHANGES IN LEVEL GREATER THAN 1/2 INCH HIGH SHALL BE RAMPED.

CHANGES IN LEVEL

N.T.S. | 303 | 07.08.20 | **11**

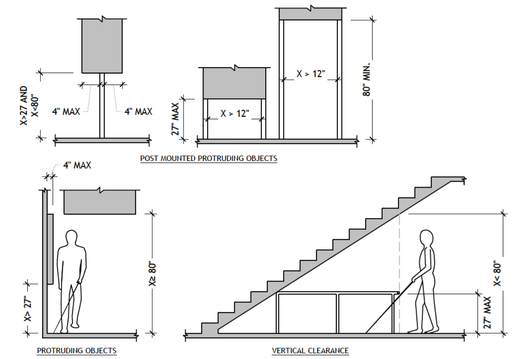

PROTRUDING OBJECT NOTES:

1. OBJECTS WITH LEADING EDGES MORE THAN 27 INCHES AND NOT MORE THAN 80 INCHES ABOVE THE FINISH FLOOR OR GROUND SHALL PROTRUDE 4 INCHES MAXIMUM HORIZONTALLY INTO THE CIRCULATION PATH.
2. FREE-STANDING OBJECTS MOUNTED ON POSTS OR PYLONS SHALL OVERHANG CIRCULATION PATHS 12 INCHES MAXIMUM WHEN LOCATED 27 INCHES MINIMUM AND 80 INCHES MAXIMUM ABOVE THE FINISH FLOOR OR GROUND.
3. WHERE A SIGN OR OTHER OBSTRUCTION IS MOUNTED BETWEEN POSTS OR PYLONS AND THE CLEAR DISTANCE BETWEEN THE POSTS OR PYLONS IS GREATER THAN 12 INCHES, THE LOWEST EDGE OF SUCH SIGN OR OBSTRUCTION SHALL BE 27 INCHES MAXIMUM OR 80 INCHES MINIMUM ABOVE FINISH FLOOR OR GROUND. THE SLOPING PORTIONS OF HANDRAILS SERVING STAIRS AND RAMPS SHALL NOT BE REQUIRED TO COMPLY.
4. DOOR CLOSERS AND DOOR STOPS SHALL BE PERMITTED TO BE 78 INCHES MINIMUM ABOVE THE FINISH FLOOR OR GROUND.
5. PROTRUDING OBJECTS SHALL NOT REDUCE THE CLEAR WIDTH REQUIRED FOR ACCESSIBLE ROUTES.

PROTRUDING OBJECTS

N.T.S. | 307 | 07.08.20 | **3**

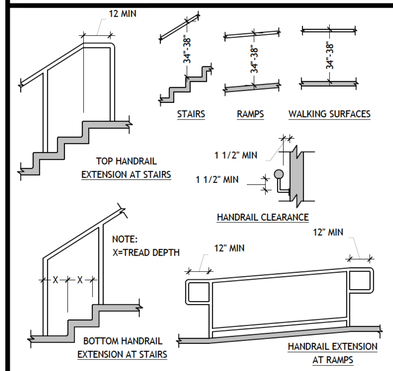

HANDRAIL NOTES:

1. HANDRAILS SHALL BE PROVIDED ON BOTH S DES OF STAIRS AND RAMPS THAT EXCEED 6 NCHES IN RISE.
2. HANDRAILS SHALL BE CONTINUOUS WITH N THE FULL LENGTH OF EACH STAIR FLIGHT OR RAMP RUN. INSIDE HANDRAILS ON SWITCHBACK OR DOGLEG STA RS AND RAMPS SHALL BE CONTINUOUS BETWEEN FLIGHTS OR RUNS.
3. TOP OF GRIPPING SURFACES OF HANDRAILS SHALL BE 34 NCHES MINIMUM AND 38 INCHES MAXIMUM VERTICALLY ABOVE WALKING SURFACES, STAIR NOSINGS, AND RAMP SURFACES. HANDRA LS SHALL BE AT A CONSISTENT HEIGHT ABOVE WALKING SURFACES, STAIR NOSINGS, AND RAMP SURFACES.
4. CLEARANCE BETWEEN HANDRA L GRIPPING SURFACES AND ADJACENT SURFACES SHALL BE 1-1/2 INCHES MINIMUM.
5. HANDRAIL GRIPPING SURFACES SHALL BE CONTINUOUS ALONG THE R LENGTH AND SHALL NOT BE OBSTRUCTED ALONG THE R TOPS OR SIDES. THE BOTTOMS OF HANDRAIL GRIPPING SURFACES SHALL NOT BE OBSTRUCTED FOR MORE THAN 20 PERCENT OF THE R LENGTH. WHERE PROV DED, HORIZONTAL PROJECTIONS SHALL OCCUR 1-1/2 INCHES M NIMUM BELOW THE BOTTOM OF THE HANDRAIL GR PPING SURFACE.
6. HANDRAIL GRIPPING SURFACES WITH A C RCULAR CROSS SECTION SHALL HAVE AN OUTSIDE DIAMETER OF 1-1/4 INCHES MINIMUM AND 2 INCHES MAXIMUM.
7. HANDRAIL GRIPPING SURFACES WITH A NON-CIRCULAR CROSS SECTION SHALL HAVE A PERIMETER DIMENSION OF 4 INCHES M NIMUM AND 6-1/4 NCHES MAXIMUM, AND A CROSS-SECTION DIMENSION OF 2-1/4 INCHES MAXIMUM.
8. HANDRAIL GRIPPING SURFACES AND ANY SURFACES ADJACENT TO THEM SHALL BE FREE OF SHARP OR ABRASIVE ELEMENTS AND SHALL HAVE ROUNDED EDGES.
9. RAMP HANDRA LS SHALL EXTEND HORIZONTALLY ABOVE THE LANDING FOR 12 INCHES MINIMUM BEYOND THE TOP AND BOTTOM OF RAMP RUNS. EXTENSIONS SHALL RETURN TO A WALL, GUARD, OR THE LANDING SURFACE, OR SHALL BE CONTINUOUS TO THE HANDRAIL OF AN ADJACENT RAMP RUN.
10. AT THE TOP OF A STA R FLIGHT, HANDRA LS SHALL EXTEND HORIZONTALLY ABOVE THE LANDING FOR 12 INCHES M NIMUM BEGINNING D RECTLY ABOVE THE FIRST RISER NOSING. EXTENSIONS SHALL RETURN TO A WALL, GUARD, OR THE LAND NG SURFACE, OR SHALL BE CONTINUOUS TO THE HANDRAIL OF AN ADJACENT STAIR FLIGHT.
11. AT THE BOTTOM OF A STAIR FLIGHT, HANDRAILS SHALL EXTEND AT THE SLOPE OF THE STAIR FLIGHT FOR A HORIZONTAL DISTANCE EQUAL TO ONE TREAD DEPTH BEYOND THE LAST RISER NOSING. EXTENSION SHALL RETURN TO A WALL, GUARD, OR THE LANDING SURFACE, OR SHALL BE CONTINUOUS TO THE HANDRAIL OF AN ADJACENT STAIR FLIGHT.

HANDRAILS

N.T.S. | 505 | 07.08.20 | **14**

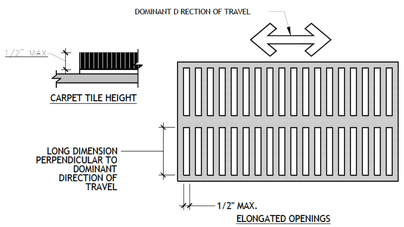

GROUND SURFACE NOTES:

1. FLOOR & GROUND SURFACES SHALL BE STABLE, FIRM AND SLIP RESISTANT.
2. CARPET OR CARPET TILE SHALL BE SECURELY ATTACHED AND SHALL HAVE A FIRM CUSHION, PAD OR BACKING OR NO CUSHION OR PAD.
3. OPENINGS IN FLOOR OR GROUND SURFACES SHALL NOT ALLOW PASSAGE OF A SPHERE MORE THAN 1/2 INCH DIAMETER.
4. ELONGATED OPENINGS SHALL BE PLACED SO THAT THE LONG DIMENSION IS PERPENDICULAR TO THE DOMINANT DIRECTION OF TRAVEL.

FLOOR OR GROUND SURFACES

N.T.S. | 302 | 07.08.20 | **10**

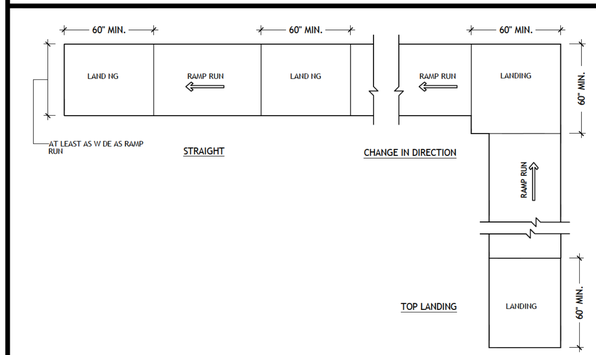

RAMP NOTES:

1. RAMP RUNS SHALL HAVE A RUNNING SLOPE NOT STEEPER THAN 1:12.
2. CROSS SLOPE OF RAMP RUNS SHALL NOT BE STEEPER THAN 1:48.
3. CHANGES IN LEVEL OTHER THAN THE RUNNING SLOPE AND CROSS SLOPE ARE NOT PERMITTED ON RAMP RUNS.
4. THE CLEAR WIDTH OF A RAMP RUN SHALL BE 36 INCHES MINIMUM. HANDRAILS AND HANDRAIL SUPPORTS THAT ARE PROVIDED ON THE RAMP RUN SHALL NOT PROJECT INTO THE REQUIRED CLEAR WIDTH OF THE RAMP RUN.
5. THE RISE FOR ANY RAMP RUN SHALL BE 30 INCHES MAXIMUM.
6. RAMPS SHALL HAVE LANDINGS AT THE TOP AND THE BOTTOM OF EACH RAMP RUN.
7. RAMP LANDING SLOPES SHALL NOT BE STEEPER THAN 1:48.
8. LANDING CLEAR WIDTH SHALL BE AT LEAST AS WIDE AS THE WIDEST RAMP RUN LEADING TO THE LANDING.
9. LANDING CLEAR LENGTH SHALL BE 60 INCHES LONG MINIMUM.
10. RAMPS THAT CHANGE DIRECTION BETWEEN RUNS AT LANDINGS SHALL HAVE A CLEAR LANDING 60 INCHES MINIMUM BY 60 INCHES MINIMUM.
11. A CURB, OR BARRIER SHALL BE PROVIDED THAT PREVENTS THE PASSAGE OF A 4 INCH DIAMETER SPHERE, WHERE ANY PORTION OF THE SPHERE IS WITHIN 4 INCHES OF THE FINISH FLOOR OR GROUND SURFACE.

RAMPS

N.T.S. | 405 | 07.08.20 | **13**

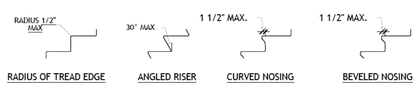

STAIRWAY NOTES:

1. ALL STEPS ON A FLIGHT OF STAIRS SHALL HAVE UNIFORM RISER HEIGHTS AND UNIFORM TREAD DEPTHS. RISERS SHALL BE 4 INCHES HIGH MINIMUM AND 7 INCHES HIGH MAXIMUM. TREADS SHALL BE 11 INCHES DEEP MINIMUM.
2. OPEN RISERS ARE NOT PERMITTED.
3. TREADS SHALL BE PERMITTED TO HAVE A SLOPE NOT STEEPER THAN 1:48.
4. THE LEADING 2 INCHES OF THE TREAD SHALL HAVE VISUAL CONTRAST OF DARK -ON-LIGHT OR LIGHT-ON-DARK FROM THE REMAINDER OF THE TREAD.
5. THE RADIUS OF CURVATURE AT THE LEADING EDGE OF THE TREAD SHALL BE 1/2 INCH MAXIMUM. RISERS SHALL BE PERMITTED TO SLOPE UNDER THE TREAD AT AN ANGLE OF 30 DEGREES MAXIMUM FROM VERTICAL. THE PERMITTED PROJECTION OF THE NOSING SHALL EXTEND 1-1/2 INCHES MAXIMUM OVER THE TREAD BELOW.

STAIRWAYS

N.T.S. | 504 | 07.08.20 | **9**

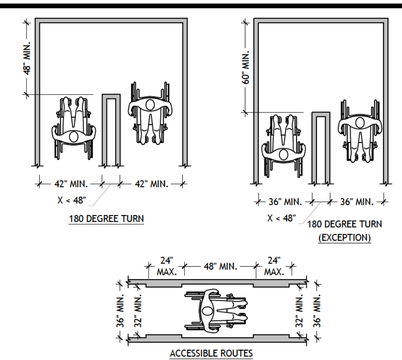

WALKING SURFACES NOTES:

1. FLOOR AND GROUND SURFACES SHALL BE STABLE, FIRM, AND SLIP RESISTANT.
2. THE RUNNING SLOPE OF WALKING SURFACES SHALL NOT BE STEEPER THAN 1:20.
3. THE CROSS SLOPE OF WALKING SURFACES SHALL NOT BE STEEPER THAN 1:48.
4. WHERE THE ACCESSIBLE ROUTE MAKES A 180 DEGREE TURN AROUND AN ELEMENT WHICH IS LESS THAN 48 INCHES WIDE, CLEAR WIDTH SHALL BE 42 INCHES MINIMUM APPROACHING THE TURN, 48 INCHES MINIMUM AT THE TURN AND 42 INCHES MINIMUM LEAVING THE TURN. WHERE THE CLEAR WIDTH AT THE TURN IS 60 INCHES MINIMUM COMPLIANCE WITH SECTION 403.5.1 SHALL NOT BE REQUIRED.
5. AN ACCESSIBLE ROUTE WITH A CLEAR WIDTH LESS THAN 60 INCHES SHALL PROVIDE PASSING SPACES AT INTERVALS OF 200 FEET MAXIMUM. PASSING SPACES SHALL BE EITHER: A SPACE 60 INCHES MINIMUM BY 60 INCHES MINIMUM; OR, AN INTERSECTION OF TWO WALKING SURFACES PROVIDING A T-SHAPED SPACE.
6. THE CLEAR WIDTH OF ACCESSIBLE ROUTES SHALL BE 36 INCHES MINIMUM
   a. THE CLEAR WIDTH SHALL BE PERMITTED TO BE REDUCED TO 32 INCHES MINIMUM FOR A LENGTH OF 24 INCHES MAXIMUM PROVIDED THAT REDUCED WIDTH SEGMENTS ARE SEPARATED BY SEGMENTS THAT ARE 48 INCHES LONG MINIMUM AND 36 INCHES WIDE MINIMUM.

WALKING SURFACES

N.T.S. | 403 | 07.08.20 | **1**

ALTAR GROUP

ARCHITECTURE
ENGINEERING

SEAL:

REGISTERED ARCHITECT
JOHN D LINTON
21410
STATE OF TEXAS

02/21/25

CONSULTANT:

TAKE 5 OIL CHANGE
PROTOTYPE: 3 BAY
5331 WALZEM ROAD
SAN ANTONIO, TX 78218

REV	DATE	DESCRIPTION
1	11/26/24	ISSUE FOR PERMIT
2	02/21/25	RE-ISSUE FOR PERMIT

DRAWN BY: RM
CHECKED BY: RR
ARCH. PROJECT NO.: DB24-023
SHEET NAME: ANSI A117.1 ACCESSIBILITY DETAILS
SHEET NUMBER: A0.10

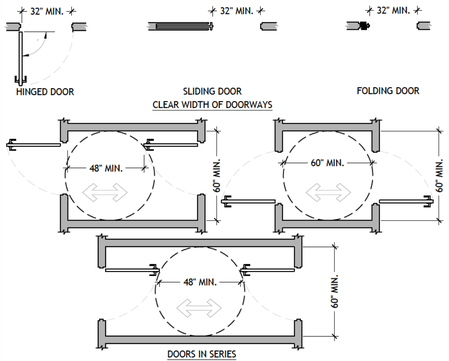

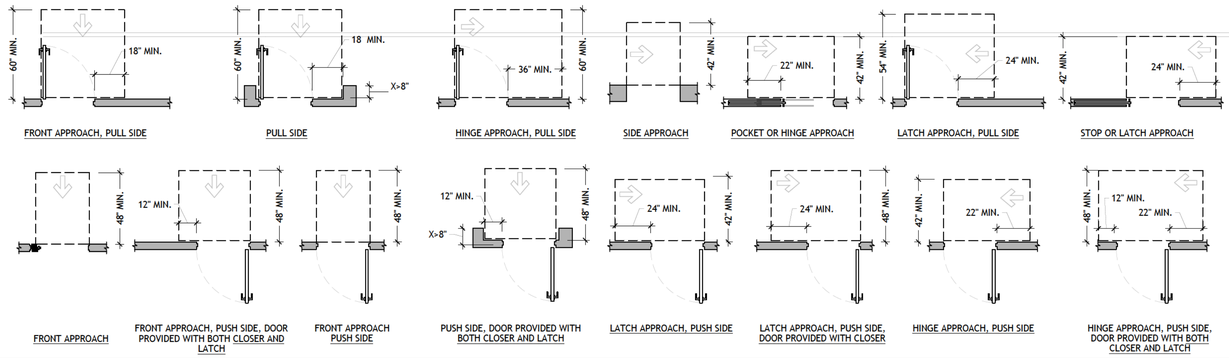

DOOR NOTES

1. REVOLVING DOORS, REVOLVING GATES, AND TURNSTILES SHALL NOT BE PART OF AN ACCESSIBLE ROUTE AND SHALL COMPLY WITH SECTIONS 402.3 AND 402.4.
2. AT LEAST ONE OF THE ACTIVE LEAVES OF DOORWAYS WITH TWO LEAVES SHALL.
3. DOOR OPENINGS SHALL PROVIDE A CLEAR WIDTH OF 32 INCHES MINIMUM. CLEAR OPENINGS OF DOORWAYS WITH SWINGING DOORS SHALL BE MEASURED BETWEEN THE FACE OF THE DOOR AND THE STOP, WITH THE DOOR OPEN 90 DEGREES. IN ALTERATIONS, A PROJECTION OF 5/8 INCH MAXIMUM INTO THE REQUIRED CLEAR WIDTH SHALL BE PERMITTED FOR THE LATCH SIDE STOP.
4. THERE SHALL BE NO PROJECTIONS INTO THE REQUIRED CLEAR OPENING WIDTH LOWER THAN 34 INCHES ABOVE THE FINISH FLOOR OR GROUND. PROJECTIONS INTO THE CLEAR OPENING WIDTH BETWEEN 34 INCHES AND 80 INCHES ABOVE THE FINISH FLOOR OR GROUND SHALL NOT EXCEED 4 INCHES.
5. MANEUVERING CLEARANCES FOR FORWARD APPROACH SHALL BE PROVIDED WHEN ANY OBSTRUCTION WITHIN 18 INCHES OF THE LATCH SIDE OF A DOORWAY. PROJECTS MORE THAN 8 INCHES BEYOND THE FACE OF THE DOOR, MEASURED PERPENDICULAR TO THE FACE OF THE DOOR OR GATE.
6. FLOOR OR GROUND SURFACE WITHIN REQUIRED MANEUVERING CLEARANCES SHALL NOT SLOPE STEEPER THAN 1:48.
7. THRESHOLDS, IF PROVIDED AT DOORWAYS, SHALL BE 1/2 INCH HIGH MAXIMUM.
8. THE DISTANCE BETWEEN TWO HINGED OR PIVOTED DOORS IN SERIES AND GATES IN SERIES SHALL BE 48 INCHES MINIMUM PLUS THE WIDTH OF DOORS OR GATES SWINGING INTO THE SPACE. THE SPACE BETWEEN THE DOORS SHALL PROVIDE A TURNING SPACE.
9. HANDLES, PULLS, LATCHES, LOCKS, AND OTHER OPERABLE PARTS ON DOORS AND GATES SHALL BE OPERABLE WITH ONE HAND AND SHALL NOT REQUIRE TIGHT GRASPING, PINCHING, OR TWISTING OF THE WRIST. THE FORCE REQUIRED TO ACTIVATE OPERABLE PARTS SHALL BE 5 POUNDS MAXIMUM.
10. OPERABLE PARTS OF HARDWARE SHALL BE 34 INCHES MINIMUM AND 48 INCHES MAXIMUM ABOVE THE FINISH FLOOR OR GROUND.
11. DOOR CLOSERS AND GATE CLOSERS SHALL BE ADJUSTED SO THAT FROM AN OPEN POSITION OF 90 DEGREES, THE TIME REQUIRED TO MOVE THE DOOR TO A POSITION OF 12 DEGREES FROM THE LATCH IS 5 SECONDS MINIMUM.
12. THE FORCE FOR PUSHING OR PULLING OPEN AN INTERIOR DOOR OR GATE SHALL BE 5 POUNDS MAXIMUM.
13. THE FORCE FOR PUSHING OR PULLING OPEN REQUIRED FIRE DOORS SHALL BE THE MINIMUM OPENING FORCE ALLOWABLE BY THE APPROPRIATE ADMINISTRATIVE AUTHORITY.
14. SWINGING DOOR AND GATE SURFACES WITHIN 10 INCHES OF THE FINISH FLOOR OR GROUND MEASURED VERTICALLY SHALL HAVE A SMOOTH SURFACE ON THE PUSH SIDE EXTENDING THE FULL WIDTH OF THE DOOR OR GATE.
15. AUTOMATIC DOORS AND AUTOMATIC GATES SHALL COMPLY WITH SECTION 404.3. FULL-POWERED AUTOMATIC DOORS SHALL COMPLY WITH ANSI/BHMA A156.10. LOW-ENERGY AND POWER-ASSISTED DOORS SHALL COMPLY WITH ANSI/BHMA A156.19.

DOORS

N.T.S. | 404 | 07.08.20 | 4

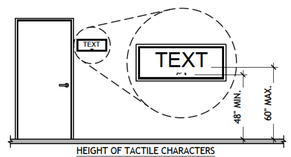

HEIGHT OF TACTILE CHARACTERS

SIGN TEXT

1. WHERE BOTH VISUAL AND TACTILE CHARACTERS ARE REQUIRED, EITHER ONE SIGN WITH BOTH VISUAL AND TACTILE CHARACTERS, OR TWO SEPARATE SIGNS, ONE WITH VISUAL, AND ONE WITH TACTILE CHARACTERS, SHALL BE PROVIDED.
2. RAISED CHARACTERS SHALL BE DUPLICATED IN BRAILLE.
3. RAISED CHARACTERS SHALL BE 1/32 INCH MINIMUM ABOVE THEIR BACKGROUND, UPPERCASE AND SANS SERIF FONT.
4. CHARACTER HEIGHT MEASURED VERTICALLY FROM THE BASELINE OF THE CHARACTER SHALL BE 5/8 INCH MINIMUM AND 2 INCHES MAXIMUM BASED ON THE HEIGHT OF THE UPPERCASE LETTER "I".
5. STROKE THICKNESS OF THE UPPERCASE LETTER "I" SHALL BE 15 PERCENT MAXIMUM OF THE HEIGHT OF THE CHARACTER.

SIGN BRAILLE

1. BRAILLE SHALL BE CONTRACTED (GRADE 2) AND SHALL COMPLY WITH SECTION 703.4.
2. BRAILLE DOTS SHALL HAVE A DOMED OR ROUNDED SHAPE AND SHALL COMPLY WITH TABLE 703.4.3. THE INDICATION OF AN UPPERCASE LETTER OR LETTERS SHALL ONLY BE USED BEFORE THE FIRST WORD OF SENTENCES, PROPER NOUNS AND NAMES, INDIVIDUAL LETTERS OF THE ALPHABET, INITIALS, AND ACRONYMS.
3. BRAILLE SHALL BE POSITIONED BELOW THE CORRESPONDING TEXT IN A HORIZONTAL FORMAT, FLUSH LEFT OR CENTERED. IF TEXT IS MULTI-LINED, BRAILLE SHALL BE PLACED BELOW THE ENTIRE TEXT. BRAILLE SHALL BE SEPARATED 3/8 INCH MINIMUM AND 1/2 INCH (MAXIMUM FROM ANY OTHER TACTILE CHARACTERS AND 3/8 INCH MINIMUM FROM RAISED BORDERS AND DECORATIVE ELEMENTS

SIGN INSTALLATION

1. TACTILE CHARACTERS ON SIGNS SHALL BE LOCATED 48 INCHES MINIMUM ABOVE THE FINISH FLOOR OR GROUND SURFACE, MEASURED FROM THE BASELINE OF THE LOWEST BRAILLE CELLS AND 60 INCHES MAXIMUM ABOVE THE FINISH FLOOR OR GROUND SURFACE, MEASURED FROM THE BASELINE OF THE HIGHEST LINE OF RAISED CHARACTERS.
2. WHERE A TACTILE SIGN IS PROVIDED AT A DOOR, THE SIGN SHALL BE LOCATED ALONGSIDE THE DOOR AT THE LATCH SIDE. WHERE A TACTILE SIGN IS PROVIDED AT DOUBLE DOORS WITH ONE ACTIVE LEAF, THE SIGN SHALL BE LOCATED ON THE INACTIVE LEAF. WHERE A TACTILE SIGN IS PROVIDED AT DOUBLE DOORS WITH TWO ACTIVE LEAFS, THE SIGN SHALL BE LOCATED TO THE RIGHT OF THE RIGHT HAND DOOR. WHERE THERE IS NO WALL SPACE AT THE LATCH SIDE OF A SINGLE DOOR OR AT THE RIGHT SIDE OF DOUBLE DOORS, SIGNS SHALL BE LOCATED ON THE NEAREST ADJACENT WALL. SIGNS CONTAINING TACTILE CHARACTERS SHALL BE LOCATED SO THAT A CLEAR FLOOR SPACE OF 18 INCHES MINIMUM BY 18 INCHES MINIMUM. CENTERED ON THE TACTILE CHARACTERS, IS PROVIDED BEYOND THE ARC OF ANY DOOR SWING BETWEEN THE CLOSED POSITION AND 45 DEGREE OPEN POSITION.

VISUAL CHARACTERS

1. CHARACTERS AND THEIR BACKGROUND SHALL HAVE A NON-GLARE FINISH. CHARACTERS SHALL CONTRAST WITH THEIR BACKGROUND WITH EITHER LIGHT CHARACTERS ON A DARK BACKGROUND OR DARK CHARACTERS ON A LIGHT BACKGROUND.
2. VISUAL CHARACTERS SHALL BE 40 INCHES MINIMUM ABOVE THE FINISH FLOOR OR GROUND.

PICTOGRAMS

1. PICTOGRAMS SHALL HAVE A FIELD HEIGHT OF 6 INCHES MINIMUM. CHARACTERS AND BRAILLE SHALL NOT BE LOCATED IN THE PICTOGRAM FIELD.
2. PICTOGRAMS AND THEIR FIELD SHALL HAVE A NON-GLARE FINISH. PICTOGRAMS SHALL CONTRAST WITH THEIR FIELD WITH EITHER A LIGHT PICTOGRAM ON A DARK FIELD OR A DARK PICTOGRAM ON A LIGHT FIELD.

SIGNS

N.T.S. | 703 | 07.08.20 | 7

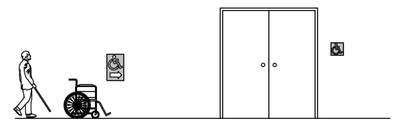

DIRECTIONAL SIGN

ISA SIGN

ENTRY & DIRECTIONAL SIGN NOTES:

1. IN EXISTING BUILDINGS AND FACILITIES WHERE NOT ALL ENTRANCES ARE ACCESSIBLE, ACCESSIBLE ENTRANCES SHALL BE IDENTIFIED BY THE INTERNATIONAL SYMBOL OF ACCESSIBILITY.
2. SYMBOLS OF ACCESSIBILITY AND THEIR BACKGROUNDS SHALL HAVE A NON-GLARE FINISH. SYMBOLS OF ACCESSIBILITY SHALL CONTRAST WITH THEIR BACKGROUNDS, WITH EITHER A LIGHT SYMBOL ON DARK BACKGROUND OR A DARK SYMBOL ON A LIGHT BACKGROUND.
3. DIRECTIONAL SIGNS THAT INDICATE THE LOCATION OF THE NEAREST ACCESSIBLE ENTRANCE SHALL BE PROVIDED AT NON-ACCESSIBLE ENTRANCES.

ENTRY AND DIRECTIONAL SIGNS

N.T.S. | 703 6 | 07.08.20 | 3

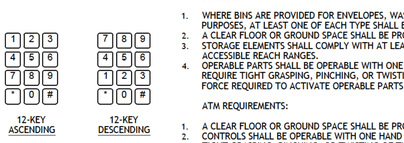

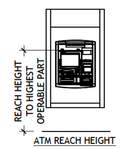

ATM REACH HEIGHT

STORAGE:

1. WHERE BINS ARE PROVIDED FOR ENVELOPES, WASTE PAPER, OR OTHER PURPOSES, AT LEAST ONE OF EACH TYPE SHALL BE ACCESSIBLE.
2. A CLEAR FLOOR OR GROUND SPACE SHALL BE PROVIDED.
3. STORAGE ELEMENTS SHALL COMPLY WITH AT LEAST ONE OF THE REQUIRED ACCESSIBLE REACH RANGES.
4. OPERABLE PARTS SHALL BE OPERABLE WITH ONE HAND AND SHALL NOT REQUIRE TIGHT GRASPING, PINCHING, OR TWISTING OF THE WRIST. THE FORCE REQUIRED TO ACTIVATE OPERABLE PARTS SHALL BE 5 POUNDS

ATM REQUIREMENTS:

1. A CLEAR FLOOR OR GROUND SPACE SHALL BE PROVIDED.
2. CONTROLS SHALL BE OPERABLE WITH ONE HAND AND SHALL NOT REQUIRE TIGHT GRASPING, PINCHING, OR TWISTING OF THE WRIST. THE FORCE REQUIRED TO ACTIVATE OPERABLE PARTS SHALL BE 5 POUNDS.
3. OPERABLE PARTS SHALL BE WITHIN AN ACCESSIBLE REACH RANGE.
4. AUTOMATIC TELLER MACHINES SHALL PROVIDE THE OPPORTUNITY FOR THE SAME DEGREE OF PRIVACY OF INPUT AND OUTPUT AVAILABLE TO ALL INDIVIDUALS.
5. MACHINES SHALL BE SPEECH ENABLED. OPERATING INSTRUCTIONS AND ORIENTATION, VISIBLE TRANSACTION PROMPTS, USER INPUT VERIFICATION, ERROR MESSAGES, AND ALL DISPLAYED INFORMATION FOR FULL USE SHALL BE ACCESSIBLE TO AND INDEPENDENTLY USABLE BY INDIVIDUALS WITH VISION IMPAIRMENTS. SPEECH SHALL BE DELIVERED THROUGH A MECHANISM THAT IS READILY AVAILABLE TO ALL USERS, INCLUDING BUT NOT LIMITED TO, AN INDUSTRY STANDARD CONNECTOR OR A TELEPHONE HANDSET. SPEECH SHALL BE RECORDED OR DIGITIZED HUMAN, OR SYNTHESIZED.
6. SPEECH SHALL BE CAPABLE OF BEING REPEATED OR INTERRUPTED. VOLUME CONTROL SHALL BE PROVIDED FOR THE SPEECH FUNCTION.
7. WHERE RECEIPTS ARE PROVIDED, SPEECH OUTPUT DEVICES SHALL PROVIDE AUDIBLE BALANCE INQUIRY INFORMATION, ERROR MESSAGES, AND ALL OTHER INFORMATION ON THE PRINTED RECEIPT NECESSARY TO COMPLETE OR VERIFY THE TRANSACTION.
8. AT LEAST ONE TACTILELY DISCERNIBLE INPUT CONTROL SHALL BE PROVIDED FOR EACH FUNCTION. WHERE PROVIDED, KEY SURFACES NOT ON ACTIVE AREAS OF DISPLAY SCREENS, SHALL BE RAISED ABOVE SURROUNDING SURFACES. WHERE MEMBRANE KEYS ARE THE ONLY METHOD OF INPUT, EACH SHALL BE TACTILELY DISCERNIBLE FROM SURROUNDING SURFACES AND ADJACENT KEYS.
9. NUMERIC KEYS SHALL BE ARRANGED IN A 12-KEY ASCENDING OR DESCENDING TELEPHONE KEYPAD LAYOUT. THE NUMBER FIVE KEY SHALL BE TACTILELY DISTINCT FROM THE OTHER KEYS.
10. FUNCTION KEYS SHALL CONTRAST VISUALLY FROM BACKGROUND SURFACES. CHARACTERS AND SYMBOLS ON KEY SURFACES SHALL CONTRAST VISUALLY FROM KEY SURFACES. VISUAL CONTRAST SHALL BE EITHER LIGHT-ON-DARK OR DARK-ON-LIGHT.
11. FUNCTION KEY SURFACES SHALL HAVE TACTILE SYMBOLS AS FOLLOWS: ENTER OR PROCEED KEY: RAISED CIRCLE; CLEAR OR CORRECT KEY: RAISED LEFT ARROW; CANCEL KEY: RAISED LETTER EX; ADD VALUE KEY: RAISED PLUS SIGN; DECREASE VALUE KEY: RAISED MINUS SIGN.
12. THE DISPLAY SCREEN SHALL BE VISIBLE FROM A POINT LOCATED 40 INCHES ABOVE THE CENTER OF THE CLEAR FLOOR SPACE IN FRONT OF THE MACHINE.
13. CHARACTERS DISPLAYED ON THE SCREEN SHALL BE IN A SANS SERIF FONT. CHARACTERS SHALL BE 3/16 INCH HIGH MINIMUM BASED ON THE UPPERCASE LETTER "I". CHARACTERS SHALL CONTRAST WITH THEIR BACKGROUND WITH EITHER LIGHT CHARACTERS ON A DARK BACKGROUND OR DARK CHARACTERS ON A LIGHT BACKGROUND.
14. BRAILLE INSTRUCTIONS FOR INITIATING THE SPEECH MODE SHALL BE PROVIDED.

ATMS

N.T.S. | 707 | 07.08.20 | 10

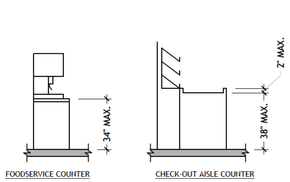

CHECKOUT COUNTERS:

1. WHERE CHECK-OUT AISLES ARE PROVIDED, ACCESSIBLE CHECK-OUT AISLES SHALL BE PROVIDED IN ACCORDANCE WITH THE IBC. WHERE CHECK-OUT AISLES SERVE DIFFERENT FUNCTIONS, ACCESSIBLE CHECK-OUT AISLES SHALL BE PROVIDED IN ACCORDANCE WITH THE IBC FOR EACH FUNCTION. WHERE CHECK-OUT AISLES ARE DISPERSED THROUGHOUT THE BUILDING OR FACILITY, ACCESSIBLE CHECK-OUT AISLES SHALL BE DISPERSED.
2. CHECKOUT COUNTER SURFACE HEIGHT SHALL BE 38 INCHES MAXIMUM ABOVE THE FINISH FLOOR OR GROUND. THE TOP OF THE COUNTER EDGE PROTECTION SHALL BE 2 INCHES MAXIMUM ABOVE THE TOP OF THE COUNTER SURFACE ON THE AISLE SIDE OF THE CHECK-OUT COUNTER.

SALES AND SERVICE COUNTERS:

1. WHERE PROVIDED, AT LEAST ONE OF EACH TYPE OF SALES COUNTER AND SERVICE COUNTER SHALL BE ACCESSIBLE. WHERE COUNTERS ARE DISPERSED THROUGHOUT THE BUILDING OR FACILITY, ACCESSIBLE COUNTERS ALSO SHALL BE DISPERSED.
2. THE ACCESSIBLE PORTION OF THE COUNTER TOP SHALL EXTEND THE SAME DEPTH AS THE SALES OR SERVICE COUNTER TOP.
3. A PORTION OF THE COUNTER SURFACE THAT IS 36 INCHES LONG MINIMUM AND 36 INCHES HIGH MAXIMUM ABOVE THE FINISH FLOOR SHALL BE PROVIDED. A CLEAR FLOOR OR GROUND SPACE SHALL BE POSITIONED FOR A PARALLEL APPROACH ADJACENT TO THE 36 INCH MINIMUM LENGTH OF COUNTER.
4. WHERE THE PROVIDED COUNTER SURFACE IS LESS THAN 36 INCHES LONG, THE ENTIRE COUNTER SURFACE SHALL BE 36 INCHES HIGH MAXIMUM ABOVE THE FINISH FLOOR.
5. WHERE COUNTERS OR TELLER WINDOWS HAVE SECURITY GLAZING TO SEPARATE PERSONNEL FROM THE PUBLIC, A METHOD TO FACILITATE VOICE COMMUNICATION SHALL BE PROVIDED

FOOD SERVICE LINES:

1. WHERE SELF-SERVICE SHELVES ARE PROVIDED, AT LEAST 50 PERCENT, BUT NO FEWER THAN ONE, OF EACH TYPE PROVIDED SHALL COMPLY WITH REQUIRED REACH RANGES.
2. THE TOPS OF TRAY SLIDES SHALL BE 28 INCHES MINIMUM AND 34 INCHES MAXIMUM ABOVE THE FINISH FLOOR OR GROUND.

COUNTERS

N.T.S. | 904 | 07.08.20 | 2

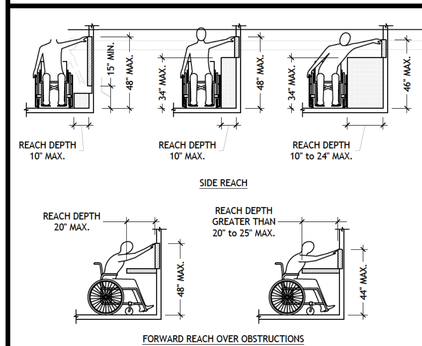

FORWARD REACH:

1. WHERE A FORWARD REACH IS UNOBSTRUCTED, THE HIGH FORWARD REACH SHALL BE 48 INCHES MAXIMUM AND THE LOW FORWARD REACH SHALL BE 15 INCHES MINIMUM ABOVE THE FINISH FLOOR OR GROUND.
2. WHERE A HIGH FORWARD REACH IS OVER AN OBSTRUCTION, THE CLEAR FLOOR SPACE SHALL EXTEND BENEATH THE ELEMENT FOR A DISTANCE NOT LESS THAN THE REQU RED REACH DEPTH OVER THE OBSTRUCTION. THE HIGH FORWARD REACH SHALL BE 48 INCHES MAXIMUM WHERE THE REACH DEPTH IS 20 INCHES MAXIMUM. WHERE THE REACH DEPTH EXCEEDS 20 INCHES, THE HIGH FORWARD REACH SHALL BE 44 INCHES MAXIMUM AND THE REACH DEPTH SHALL BE 25 INCHES MAXIMUM.

SIDE REACH:

1. WHERE A CLEAR FLOOR OR GROUND SPACE ALLOWS A PARALLEL APPROACH TO AN ELEMENT AND THE SIDE REACH IS UNOBSTRUCTED, THE HIGH SIDE REACH SHALL BE 48 INCHES MAXIMUM AND THE LOW SIDE REACH SHALL BE 15 INCHES MINIMUM ABOVE THE FINISH FLOOR OR GROUND.
2. AN OBSTRUCTION SHALL BE PERMITTED BETWEEN THE CLEAR FLOOR OR GROUND SPACE AND THE ELEMENT WHERE THE DEPTH OF THE OBSTRUCTION IS 10 INCHES MAXIMUM.
3. WHERE A CLEAR FLOOR OR GROUND SPACE ALLOWS A PARALLEL APPROACH TO AN ELEMENT AND THE HIGH SIDE REACH IS OVER AN OBSTRUCTION, THE HEIGHT OF THE OBSTRUCTION SHALL BE 34 INCHES MAXIMUM AND THE DEPTH OF THE OBSTRUCTION SHALL BE 24 INCHES MAXIMUM. THE HIGH S DE REACH SHALL BE 48 INCHES MAXIMUM FOR A REACH DEPTH OF 10 INCHES MAXIMUM. WHERE THE REACH DEPTH EXCEEDS 10 INCHES, THE HIGH SIDE REACH SHALL BE 46 INCHES MAXIMUM FOR A REACH DEPTH OF 24 INCHES MAXIMUM.

REACH RANGES

N.T.S. | 308 | 07.08.20 | 9

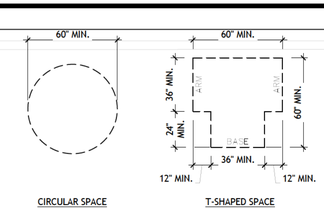

TURNING SPACE NOTES:

1. SLOPES NOT STEEPER THAN 1:48 SHALL BE PERMITTED.
2. CIRCLE TURNING SPACE SHALL BE A SPACE OF 60 INCHES DIAMETER MINIMUM. THE SPACE SHALL BE PERMITTED TO INCLUDE KNEE AND TOE CLEARANCE.
3. T-SHAPED TURNING SPACE SHALL BE WITHIN A 60 INCH SQUARE MINIMUM WITH ARMS AND BASE 36 INCHES WIDE MINIMUM. EACH ARM OF THE T SHALL BE CLEAR OF OBSTRUCTIONS 12 INCHES MINIMUM IN EACH DIRECTION AND THE BASE SHALL BE CLEAR OF OBSTRUCTIONS 24 INCHES MINIMUM. THE SPACE SHALL BE PERMITTED TO INCLUDE KNEE AND TOE CLEARANCE ONLY AT THE END OF EITHER THE BASE OR ONE ARM.
4. DOORS SHALL BE PERMITTED TO SWING INTO TURNING SPACES UNLESS OTHERWISE SPECIFIED.

TURNING SPACE

N.T.S. | 304 | 07.08.20 | 5

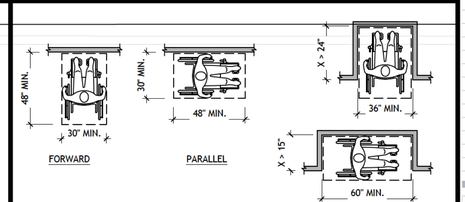

CLEAR FLOOR SPACE NOTES:

1. SLOPES NOT STEEPER THAN 1:48 SHALL BE PERMITTED.
2. THE CLEAR FLOOR OR GROUND SPACE SHALL BE 30 INCHES MINIMUM BY 48 INCHES MINIMUM.
3. UNLESS OTHERWISE SPECIFIED, CLEAR FLOOR OR GROUND SPACE SHALL BE PERMITTED TO INCLUDE KNEE AND TOE CLEARANCE.
4. UNLESS OTHERWISE SPECIFIED, CLEAR FLOOR OR GROUND SPACE SHALL BE POSITIONED FOR EITHER FORWARD OR PARALLEL APPROACH TO AN ELEMENT.
5. ONE FULL UNOBSTRUCTED SIDE OF THE CLEAR FLOOR OR GROUND SPACE SHALL ADJOIN AN ACCESSIBLE ROUTE OR ADJOIN ANOTHER CLEAR FLOOR OR GROUND SPACE.
6. ALCOVES SHALL BE 36 INCHES WIDE MINIMUM WHERE THE DEPTH EXCEEDS 24 INCHES.
7. ALCOVES SHALL BE 60 INCHES WIDE MINIMUM WHERE THE DEPTH EXCEEDS 15 INCHES.

CLEAR FLOOR SPACE

N.T.S. | 305 | 07.08.20 | 1

ALTAR GROUP

ARCHITECTURE
ENGINEERING

SEAL:

REGISTERED ARCHITECT JOHND LINTON 21410 STATE OF TEXAS

02/21/25

CONSULTANT:

TAKE 5 OIL CHANGE

TAKE 5 OIL CHANGE

PROTOTYPE: 3 BAY

5331 WALZEM ROAD
SAN ANTONIO, TX 78218

REV	DATE	DESCRIPTION
1	11/26/24	ISSUE FOR PERMIT
2	02/21/25	RE-ISSUE FOR PERMIT

DRAWN BY: RM
CHECKED BY: RR
ARCH. PROJECT NO.: DB24-023
SHEET NAME: ANSI A117.1 ACCESSIBILITY DETAILS
SHEET NUMBER: A0.11

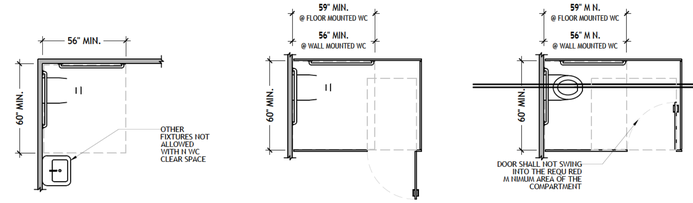

SIZE OF CLEARANCE AT WATER CLOSETS IN SINGLE USER RESTROOM

SIDE OUT-SWINGING DOOR

SIDE IN-SWINGING DOOR

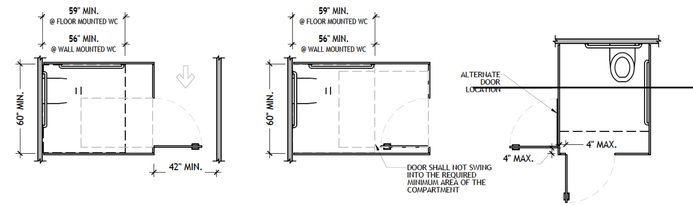

END OUT-SWINGING DOOR

END IN-SWINGING DOOR

TOILET COMPARTMENT DOORS

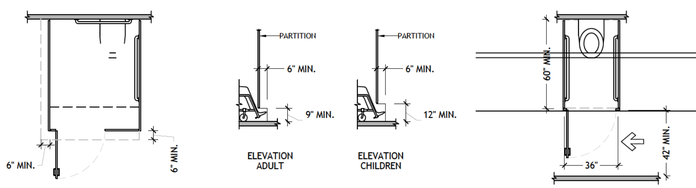

TOE CLEARANCE

ELEVATION ADULT

ELEVATION CHILDREN

TOE CLEARANCE

AMBULATORY COMPARTMENT

SINGLE USER SIZE:

1. CLEARANCE AROUND A WATER CLOSET SHALL BE 60 INCHES MINIMUM MEASURED PERPENDICULAR FROM THE SIDE WALL AND 56 INCHES MINIMUM MEASURED PERPENDICULAR FROM THE REAR WALL.

TOILET COMPARTMENT SIZE:

1. WHEELCHAIR ACCESSIBLE COMPARTMENTS SHALL BE 60 INCHES WIDE MINIMUM MEASURED PERPENDICULAR TO THE SIDE WALL, AND 56 INCHES DEEP MINIMUM FOR WALL HUNG WATER CLOSETS AND 59 INCHES DEEP MINIMUM FOR FLOOR MOUNTED WATER CLOSETS MEASURED PERPENDICULAR TO THE REAR WALL.

TOILET COMPARTMENT DOORS:

1. TOILET COMPARTMENT DOORS, INCLUDING DOOR HARDWARE, SHALL COMPLY WITH SECTION 404 EXCEPT THAT IF THE APPROACH IS TO THE LATCH SIDE OF THE COMPARTMENT DOOR, CLEARANCE BETWEEN THE DOOR SIDE OF THE STALL AND ANY OBSTRUCTION SHALL BE 42 INCHES MINIMUM.
2. DOORS SHALL BE LOCATED IN THE FRONT PARTITION OR IN THE SIDE WALL OR PARTITION FARTHEST FROM THE WATER CLOSET.
3. WHERE LOCATED IN THE FRONT PARTITION, THE DOOR OPENING SHALL BE 4 INCHES MAXIMUM FROM THE SIDE WALL OR PARTITION FARTHEST FROM THE WATER CLOSET. WHERE LOCATED IN THE SIDE WALL OR PARTITION, THE DOOR OPENING SHALL BE 4 INCHES MAXIMUM FROM THE FRONT PARTITION.
4. THE DOOR SHALL BE SELF-CLOSING.
5. A DOOR PULL COMPLYING WITH SECTION 404.2.6 SHALL BE PLACED ON BOTH SIDES OF THE DOOR NEAR THE LATCH.
6. DOORS SHALL NOT SWING INTO THE CLEAR FLOOR SPACE OR CLEARANCE REQUIRED FOR ANY FIXTURE.

TOE CLEARANCE:

1. THE FRONT PARTITION AND AT LEAST ONE SIDE PARTITION SHALL PROVIDE A TOE CLEARANCE OF 9 INCHES MINIMUM ABOVE THE FINISH FLOOR AND 6 INCHES DEEP MINIMUM BEYOND THE COMPARTMENT-SIDE FACE OF THE PARTITION, EXCLUSIVE OF PARTITION SUPPORT MEMBERS.
2. COMPARTMENTS FOR CHILDREN'S USE SHALL PROVIDE A TOE CLEARANCE OF 12 INCHES MINIMUM ABOVE THE FINISH FLOOR.
3. TOE CLEARANCE AT THE SIDE PARTITION IS NOT REQUIRED IN A COMPARTMENT GREATER THAN 66 INCHES WIDE.

AMBULATORY ACCESSIBLE COMPARTMENTS:

1. AMBULATORY ACCESSIBLE COMPARTMENTS SHALL HAVE A DEPTH OF 60 INCHES MINIMUM AND A WIDTH OF 36 INCHES.
2. TOILET COMPARTMENT DOORS, INCLUDING DOOR HARDWARE, SHALL COMPLY WITH SECTION 404, EXCEPT THAT IF THE APPROACH IS TO THE LATCH SIDE OF THE COMPARTMENT DOOR, CLEARANCE BETWEEN THE DOOR SIDE OF THE COMPARTMENT AND ANY OBSTRUCTION SHALL BE 42 INCHES MINIMUM. THE DOOR SHALL BE SELF-CLOSING. A DOOR PULL COMPLYING WITH SECTION 404.2.6 SHALL BE PLACED ON BOTH SIDES OF THE DOOR NEAR THE LATCH. TOILET COMPARTMENT DOORS SHALL NOT SWING INTO THE MINIMUM REQUIRED COMPARTMENT AREA.

OVERLAP:

1. THE REQUIRED CLEARANCE AROUND THE WATER CLOSET SHALL BE PERMITTED TO OVERLAP THE WATER CLOSET, ASSOCIATED GRAB BARS, DISPENSERS, SANITARY NAPKIN DISPOSAL UNITS, COAT HOOKS, SHELVES, ACCESSIBLE ROUTES, CLEAR FLOOR SPACE AND CLEARANCES REQUIRED AT OTHER FIXTURES, AND THE TURNING SPACE. NO OTHER FIXTURES OR OBSTRUCTIONS SHALL BE LOCATED WITHIN THE REQUIRED WATER CLOSET CLEARANCE.

WATER CLOSET:

1. THE WATER CLOSET SHALL BE POSITIONED WITH A WALL OR PARTITION TO THE REAR AND TO ONE SIDE. THE CENTERLINE OF THE WATER CLOSET SHALL BE 16 INCHES MINIMUM TO 18 INCHES MAXIMUM FROM THE SIDE WALL OR PARTITION, EXCEPT THAT THE WATER CLOSET SHALL BE 17 INCHES MINIMUM AND 19 INCHES MAXIMUM FROM THE SIDE WALL OR PARTITION IN THE AMBULATORY ACCESSIBLE TOILET COMPARTMENT.
2. THE SEAT HEIGHT OF A WATER CLOSET ABOVE THE FINISH FLOOR SHALL BE 17 INCHES MINIMUM AND 19 INCHES MAXIMUM MEASURED TO THE TOP OF THE SEAT. SEATS SHALL NOT BE SPRUNG TO RETURN TO A LIFTED POSITION. SEATS SHALL BE 2 INCHES HIGH MAXIMUM.

TOILET ROOMS & COMPARTMENTS

N.T.S. | 603, 604 | 07.08.20 | 11

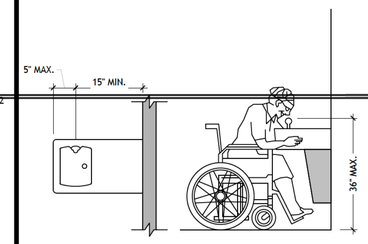

DRINKING FOUNTAIN SPOUT LOCATION

DRINKING FOUNTAIN ELEVATION

DR NKING FOUNTAIN NOTES

1. NO FEWER THAN TWO DRINK NG FOUNTA NS SHALL BE PROVIDED. WHEN PROVIDED, ONE LOWERED DRINKING FOUNTAIN AND ONE DRINKING FOUNTA N FOR STAND NG PERSONS SHALL BE PROVIDED.
2. WHERE A SINGLE DRINKING FOUNTAIN FOR STANDING AND SEATING PERSONS IS PROV DED, IT SHALL BE PERMITTED TO BE SUBSTITUTED FOR TWO SEPARATE DR NKING FOUNTAINS.
3. UNITS SHALL HAVE A CLEAR FLOOR OR GROUND SPACE POSITIONED FOR A FORWARD APPROACH AND CENTERED ON THE UNIT.
4. KNEE AND TOE CLEARANCE SHALL BE PROVIDED.
5. OPERABLE PARTS SHALL BE OPERABLE WITH ONE HAND AND SHALL NOT REQUIRE TIGHT GRASPING, PINCH NG, OR TWISTING OF THE WRIST. THE FORCE REQUIRED TO ACTIVATE OPERABLE PARTS SHALL BE 5 POUNDS.
6. SPOUT OUTLETS SHALL BE 36 INCHES MAXIMUM ABOVE THE FINISH FLOOR OR GROUND.
7. THE SPOUT SHALL BE LOCATED 15 INCHES MINIMUM FROM THE VERTICAL SUPPORT AND 5 INCHES MAXIMUM FROM THE FRONT EDGE OF THE UNIT, INCLUD NG BUMPERS.
8. THE SPOUT SHALL PROVIDE A FLOW OF WATER 4 INCHES HIGH MINIMUM AND SHALL BE LOCATED 5 INCHES MAXIMUM FROM THE FRONT OF THE UNIT. THE ANGLE OF THE WATER STREAM SHALL BE MEASURED HORIZONTALLY RELATIVE TO THE FRONT FACE OF THE UNIT. WHERE SPOUTS ARE LOCATED LESS THAN 3 INCHES OF THE FRONT OF THE UNIT, THE ANGLE OF THE WATER STREAM SHALL BE 30 DEGREES MAXIMUM. WHERE SPOUTS ARE LOCATED BETWEEN 3 INCHES AND 5 NCHES MAXIMUM FROM THE FRONT OF THE UNIT, THE ANGLE OF THE WATER STREAM SHALL BE 15 DEGREES MAXIMUM.
9. SPOUT OUTLETS OF DRINKING FOUNTAINS FOR STANDING PERSONS SHALL BE 38 INCHES MINIMUM AND 43 NCHES MAXIMUM ABOVE THE FINISH FLOOR OR GROUND.

DRINKING FOUNTAINS

N.T.S. | 1109 5, 602 | 07.08.20 | 4

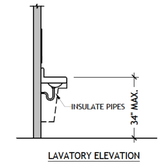

LAVATORY ELEVATION

LAVATORY NOTES:

1. A CLEAR FLOOR SPACE POSITIONED FOR A FORWARD APPROACH, AND KNEE AND TOE CLEARANCE SHALL BE PROVIDED.
2. THE DIP OF THE OVERFLOW SHALL NOT BE CONSIDERED IN DETERMINING KNEE AND TOE CLEARANCES.
3. ~~LAVATORIES AND SINKS SHALL BE INSTALLED WITH THE FRONT OF THE HIGHER OF THE RIM OR~~ COUNTER SURFACE 34 INCHES MAXIMUM ABOVE THE FINISH FLOOR OR GROUND.
4. CONTROLS FOR FAUCETS SHALL BE OPERABLE WITH ONE HAND AND SHALL NOT REQUIRE TIGHT GRASPING, PINCHING, OR TWISTING OF THE WRIST. THE FORCE REQUIRED TO ACTIVATE OPERABLE PARTS SHALL BE 5 POUNDS. HAND-OPERATED METERING FAUCETS SHALL REMAIN OPEN FOR 10 SECONDS MINIMUM.
5. WATER SUPPLY AND DRAIN PIPES UNDER LAVATORIES AND SINKS SHALL BE INSULATED OR OTHERWISE CONFIGURED TO PROTECT AGAINST CONTACT. THERE SHALL BE NO SHARP OR ABRASIVE SURFACES UNDER LAVATORIES AND SINKS.

LAVATORIES

N.T.S. | 606 | 07.08.20 | 7

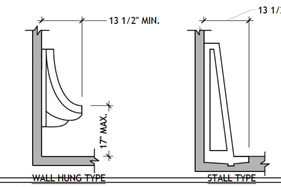

WALL HUNG TYPE

STALL TYPE

URINAL NOTES:

1. URINALS SHALL BE THE STALL-TYPE OR THE WALL-HUNG TYPE WITH THE RIM 17 INCHES MAXIMUM ABOVE THE FINISH FLOOR OR GROUND.
2. URINALS SHALL BE 13-1/2 INCHES MINIMUM MEASURED FROM THE OUTER FACE OF THE URINAL RIM TO THE BACK OF THE FIXTURE.
3. A CLEAR FLOOR OR GROUND SPACE POSITIONED FOR FORWARD APPROACH SHALL BE PROVIDED.
4. FLUSH CONTROLS SHALL BE HAND OPERATED OR AUTOMATIC. HAND OPERATED FLUSH CONTROLS SHALL BE OPERABLE WITH ONE HAND AND SHALL NOT REQUIRE TIGHT GRASPING, PINCHING, OR TWISTING OF THE WRIST. THE FORCE REQUIRED TO ACTIVATE OPERABLE PARTS SHALL BE 5 POUNDS.

URINALS

N.T.S. | 605 | 07.08.20 | 3

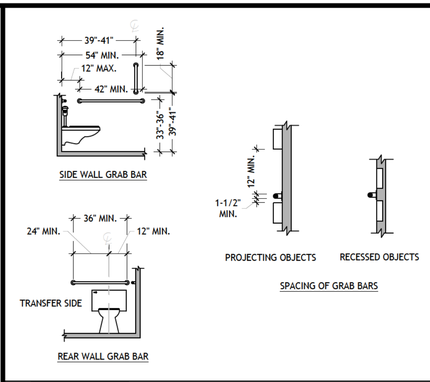

SIDE WALL GRAB BAR

REAR WALL GRAB BAR

PROJECTING OBJECTS

RECESSED OBJECTS

SPACING OF GRAB BARS

GRAB BAR NOTES:

1. GRAB BARS SHALL BE PROVIDED ON THE SIDE WALL CLOSEST TO THE WATER CLOSET AND ON THE REAR WALL.
2. THE SIDE WALL GRAB BAR SHALL BE 42 INCHES LONG MINIMUM, LOCATED 12 INCHES MAXIMUM FROM THE REAR WALL AND EXTENDING 54 INCHES MINIMUM FROM THE REAR WALL.
3. A VERTICAL GRAB BAR 18 INCHES MINIMUM IN LENGTH SHALL BE MOUNTED WITH THE BOTTOM OF THE BAR LOCATED 39 INCHES MINIMUM AND 41 INCHES MAXIMUM ABOVE THE FLOOR, AND WITH THE CENTER LINE OF THE BAR LOCATED 39 INCHES MINIMUM AND 41 INCHES MAXIMUM FROM THE REAR WALL.
4. THE REAR WALL GRAB BAR SHALL BE 36 INCHES LONG MINIMUM AND EXTEND FROM THE CENTERLINE OF THE WATER CLOSET 12 INCHES MINIMUM ON ONE SIDE AND 24 INCHES MINIMUM ON THE OTHER SIDE.
5. THE REAR GRAB BAR SHALL BE PERMITTED TO BE 24 INCHES LONG MINIMUM, CENTERED ON THE WATER CLOSET, WHERE WALL SPACE DOES NOT PERMIT A LENGTH OF 36 INCHES MINIMUM DUE TO THE LOCATION OF A RECESSED FIXTURE ADJACENT TO THE WATER CLOSET.
6. GRAB BARS WITH CIRCULAR CROSS SECTIONS SHALL HAVE AN OUTSIDE DIAMETER OF 1-1/4 INCHES MINIMUM AND 2 INCHES MAXIMUM.
7. THE SPACE BETWEEN THE WALL AND THE GRAB BAR SHALL BE 1-1/2 INCHES. THE SPACE BETWEEN THE GRAB BAR AND PROJECTING OBJECTS BELOW AND AT THE ENDS SHALL BE 1-1/2 INCHES MINIMUM. THE SPACE BETWEEN THE GRAB BAR AND PROJECTING OBJECTS ABOVE SHALL BE 12 INCHES MINIMUM.
8. GRAB BARS SHALL BE INSTALLED IN A HORIZONTAL POSITION, 33 INCHES MINIMUM AND 36 INCHES MAXIMUM ABOVE THE FINISH FLOOR MEASURED TO THE TOP OF THE GRIPPING SURFACE.
9. GRAB BARS AND ANY WALL OR OTHER SURFACES ADJACENT TO GRAB BARS SHALL BE FREE OF SHARP OR ABRASIVE ELEMENTS AND SHALL HAVE ROUNDED EDGES.
10. GRAB BARS SHALL NOT ROTATE WITHIN THEIR FITTINGS.
11. GRAB BARS SHALL BE INSTALLED IN ANY MANNER THAT PROVIDES A GRIPPING SURFACE AT THE SPECIFIED LOCATIONS AND THAT DOES NOT OBSTRUCT THE REQUIRED CLEAR FLOOR SPACE.
12. ALLOWABLE STRESSES SHALL NOT BE EXCEEDED FOR MATERIALS USED WHEN A VERTICAL OR HORIZONTAL FORCE OF 250 POUNDS IS APPLIED AT ANY POINT ON THE GRAB BAR, FASTENER, MOUNTING DEVICE, OR SUPPORTING STRUCTURE.

WATER CLOSET GRAB BARS

N.T.S. | 604, 609 | 07.08.20 | 10

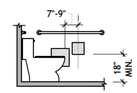

DISPENSER UNIT LOCATION

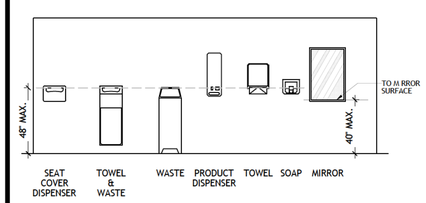

TOILET ROOM ACCESSORIES

CLEAR SPACE

1. DOORS SHALL NOT SWING INTO THE CLEAR FLOOR SPACE OR CLEARANCE REQUIRED FOR ANY FIXTURE.
2. WHERE THE TOILET ROOM OR BATHING ROOM IS FOR INDIVIDUAL USE AND A 30 INCH X 48 INCH CLEAR FLOOR SPACE IS PROVIDED WITHIN THE ROOM BEYOND THE ARC OF THE DOOR SWING, DOORS SHALL BE PERMITTED TO SWING INTO THE CLEAR FLOOR SPACE OR CLEARANCE REQUIRED FOR ANY FIXTURE

TOILET ROOM ACCESSORIES

1. MIRRORS LOCATED ABOVE LAVATORIES OR COUNTERTOPS SHALL BE INSTALLED WITH THE BOTTOM EDGE OF THE REFLECTING SURFACE 40 INCHES MAXIMUM ABOVE THE FINISH FLOOR OR GROUND.
2. COAT HOOKS SHALL BE LOCATED WITHIN 48 INCHES MAXIMUM ABOVE THE FINISH FLOOR.
3. SHELVES SHALL BE LOCATED 40 INCHES MINIMUM AND 48 INCHES MAXIMUM ABOVE THE FINISH FLOOR.
4. WHERE TOWEL OR SANITARY NAPKIN DISPENSERS, WASTE RECEPTACLES, OR OTHER ACCESSORIES ARE PROVIDED IN TOILET FACILITIES, AT LEAST ONE OF EACH TYPE SHALL BE LOCATED ON AN ACCESSIBLE ROUTE. ALL OPERABLE PARTS, INCLUDING COIN SLOTS, SHALL BE 48 INCHES MAXIMUM ABOVE THE FINISH FLOOR.
5. TOILET PAPER DISPENSERS SHALL BE 7 INCHES MINIMUM AND 9 INCHES MAXIMUM IN FRONT OF THE WATER CLOSET MEASURED TO THE CENTERLINE OF THE DISPENSER. THE OUTLET OF THE DISPENSER SHALL BE BELOW THE GRAB BAR, 18 INCHES MINIMUM ABOVE THE FINISH FLOOR AND SHALL NOT BE LOCATED BEHIND GRAB BARS. DISPENSERS SHALL NOT BE OF A TYPE THAT CONTROLS DELIVERY OR THAT DOES NOT ALLOW CONTINUOUS PAPER FLOW.

TOILET ROOM ACCESSORIES

N.T.S. | 603, 604 | 07.08.20 | 2

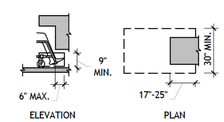

TOE CLEARANCE

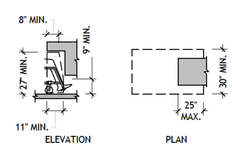

KNEE CLEARANCE

TOE CLEARANCE

1. SPACE UNDER AN ELEMENT BETWEEN THE FINISH FLOOR OR GROUND AND 9 INCHES ABOVE THE F NISH FLOOR OR GROUND SHALL BE CONSIDERED TOE CLEARANCE.
2. TOE CLEARANCE SHALL EXTEND 25 NCHES MAXIMUM UNDER AN ELEMENT.
3. WHERE TOE CLEARANCE IS REQUIRED AT AN ELEMENT AS PART OF A CLEAR FLOOR SPACE, THE TOE CLEARANCE SHALL EXTEND 17 NCHES MINIMUM BENEATH THE ELEMENT.
4. SPACE EXTEND NG GREATER THAN 6 NCHES BEYOND THE AVAILABLE KNEE CLEARANCE AT 9 INCHES ABOVE THE FINISH FLOOR OR GROUND SHALL NOT BE CONS DERED TOE CLEARANCE.
5. TOE CLEARANCE SHALL BE 30 NCHES WIDE MINIMUM.

KNEE CLEARANCE

1. SPACE UNDER AN ELEMENT BETWEEN 9 INCHES AND 27 INCHES ABOVE THE FINISH FLOOR OR GROUND SHALL BE CONS DERED KNEE CLEARANCE.
2. KNEE CLEARANCE SHALL EXTEND 25 INCHES MAXIMUM UNDER AN ELEMENT AT 9 NCHES ABOVE THE FINISH FLOOR OR GROUND.
3. WHERE KNEE CLEARANCE IS REQUIRED UNDER AN ELEMENT AS PART OF A CLEAR FLOOR SPACE, THE KNEE CLEARANCE SHALL BE 11 INCHES DEEP M NIMUM AT 9 NCHES ABOVE THE FINISH FLOOR OR GROUND, AND 8 INCHES DEEP M NIMUM AT 27 NCHES ABOVE THE FINISH FLOOR OR GROUND.
4. BETWEEN 9 INCHES AND 27 INCHES ABOVE THE F NISH FLOOR OR GROUND, THE KNEE CLEARANCE SHALL BE PERMITTED TO REDUCE AT A RATE OF 1 INCH N DEPTH FOR EACH 6 NCHES N HEIGHT.
5. KNEE CLEARANCE SHALL BE 30 INCHES W DE MINIMUM.

TOE & KNEE CLEARANCE

N.T.S. | 306 | 07.08.20 | 1

ALTAR GROUP

ARCHITECTURE ENGINEERING

SEAL:

REGISTERED ARCHITECT JOHND LINT OH 21410 STATE OF TEXAS

02/21/25

CONSULTANT:

TAKE 5 OIL CHANGE

TAKE 5 OIL CHANGE

PROTOTYPE: 3 BAY

5331 WALZEM ROAD
SAN ANTONIO, TX 78218

REV	DATE	DESCRIPTION
1	11/26/24	ISSUE FOR PERMIT
2	02/21/25	RE-ISSUE FOR PERMIT

DRAWN BY: RM

CHECKED BY: RR

ARCH. PROJECT NO.: DB24-023

SHEET NAME: ANSI A117.1 ACCESSIBILITY DETAILS

SHEET NUMBER: A0.12

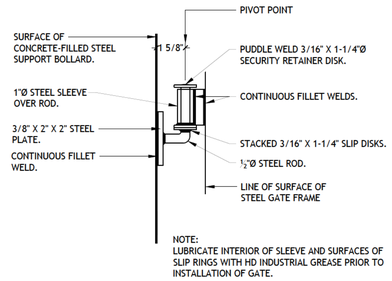

NOTE:
LUBRICATE INTERIOR OF SLEEVE AND SURFACES OF SLIP RINGS WITH HD INDUSTRIAL GREASE PRIOR TO INSTALLATION OF GATE.

GATE HINGE DETAIL 3" = 1'-0" **12**

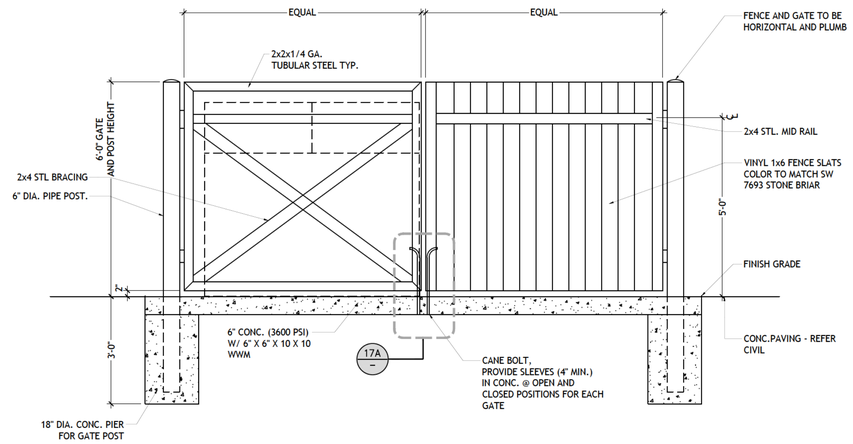

NOTE:
1. ALL HARDWARE TO BE GALVANIZED UNLESS OTHERWISE NOTED
2. ALL STEEL POSTS AND GATE FRAME TO BE PRIMED AND PAINTED WITH 2 COATS EACH. COLOR TO BE DARK BRONZE SW6076.
3. ALL STEEL MEMBERS TO BE SHOP WELDED. PROVIDE SHOP DRAWINGS FOR APPROVAL PRIOR TO FABRICATION. ALL STEEL TO BE PAINTED DARK BRONZE SW6076.
4. ALL METAL FRAMING, POST AND HARDWARE TO BE PRIMED AND PAINTED W/ MIN. 1 COAT PRIMER, AND 2 COATS FINISH. PAINT TO BE OIL BASED AND COLOR TO BE DARK BRONZE SW6076.

TRASH ENCLOSURE ELEVATION 1/2" = 1'-0" **3**

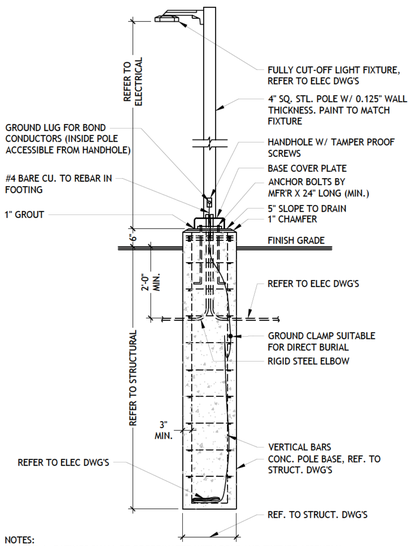

NOTES:
1. E.P.A. RATINGS SHALL BE COORDINATED WITH POLE AND FIXTURE ASSEMBLY.
2. G.C. TO PROVIDE POLE BASE DESIGN SEALED BY BY STRUCT. ENG. REFER TO STRUCT. DWG'S.
3. CONNECT TO REBAR W/ APPROVED LISTED GROUNDING CLAMPS USED FOR THIS PURPOSE.
4. POLE BASED IN NATURAL UNDISTURBED SOIL OR APPROVED COMPACT FILL (PER SOILS REPORT).
5. PROVIDE "SONOTUBE" LINER TO ELIMINATE TUBE SPIRAL LINES, TYP.

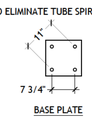

NOTE:
VERIFY DIMENSIONS WITH MANUFACTURER

SITE YARD LIGHT AND BASE 1/2" = 1'-0" **14**

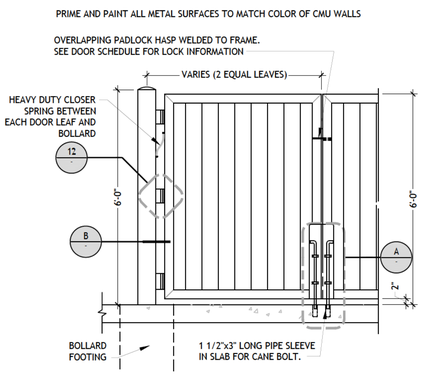

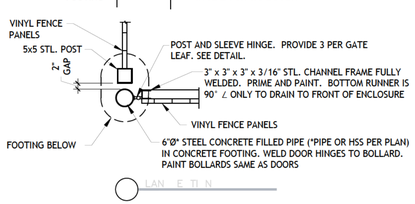

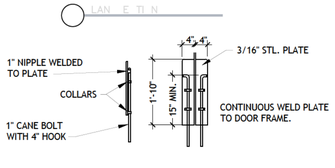

ENCLOSURE GATE DETAILS 1/2" = 1'-0" **17**

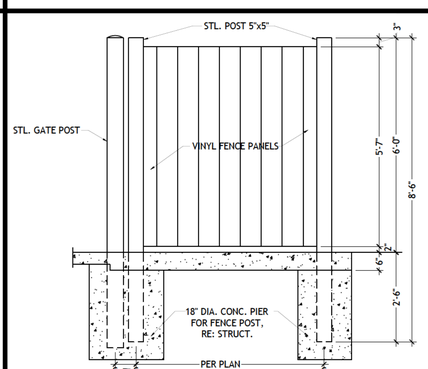

TRASH ENCLOSURE ELEVATION 1/2" = 1'-0" **9**

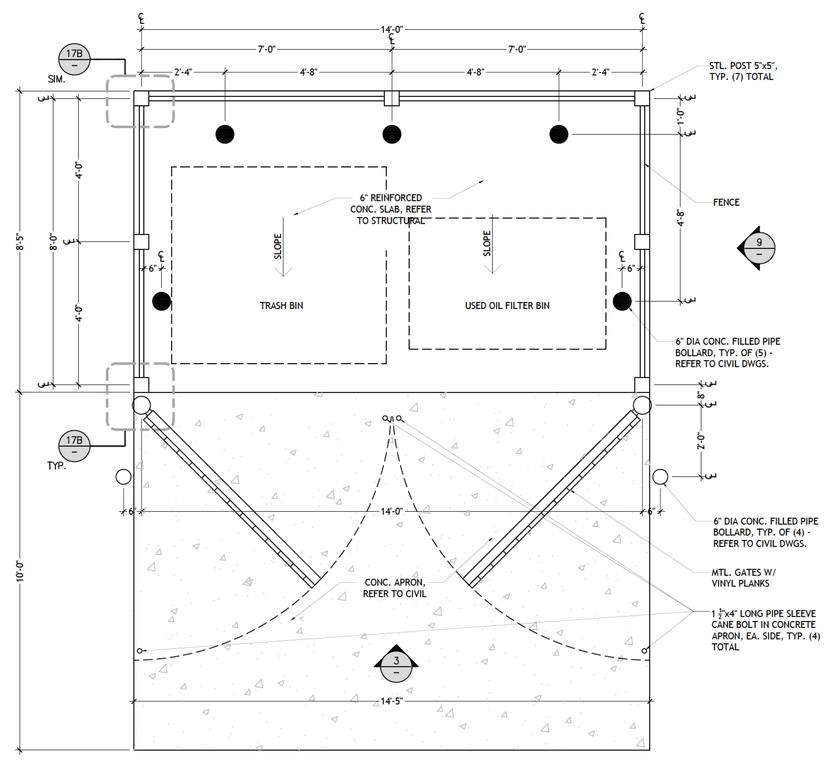

TRASH ENCLOSURE PLAN 1/2" = 1'-0" **1**

ALTAR GROUP

ARCHITECTURE
ENGINEERING

SEAL:

REGISTERED ARCHITECT JOHND LINT OLIVER 21410 STATE OF TEXAS
02/21/25

CONSULTANT:

TAKE 5 OIL CHANGE

TAKE 5 OIL CHANGE
PROTOTYPE: 3 BAY
5331 WALZEM ROAD
SAN ANTONIO, TX 78218

REV	DATE	DESCRIPTION
1	11/26/24	ISSUE FOR PERMIT
2	02/21/25	RE-ISSUE FOR PERMIT

DRAWN BY: RM
CHECKED BY: RR
ARCH. PROJECT NO.: DB24-023
SHEET NAME: SITE STRUCTURES
SHEET NUMBER: **A1.50**

1. CLASS 1 LIQUIDS ARE NOT STORED IN TAKE 5 BUILDINGS.
2. CLASS IIIB LIQUID (MOTOR OIL) IS STORED IN THE SIDE REPAIR AREA WHICH IS VENTILATED AS REQUIRED. SEE MECHANICAL SHEETS.
3. NO LIQUIDS ARE STORED IN THE LUBE TRENCHES
4. VEHICLES ARE OPERATED ONLY FOR THE DURATION OF MOVING THEM INTO AND OUT OF THE BUILDING.

OPERATIONAL NOTES | -

12" WIRE SHELVING TO BE "CLOSETMAID - SUPERSLIDE" OR EQUAL, ON ADJUSTABLE MOUNT HARDWARE W/ VERT. STANDARDS AT 24" O.C. MAX. SPACING.

16" WIRE SHELVING TO BE "CLOSETMAID - MAX LOAD" OR EQUAL, ON HEAVY DUTY "MAX LOAD" ADJUSTABLE MOUNT HARDWARE W/ VERT STANDARDS AT 24" O.C. MAX. SPACING.

CLOSET ROD TO BE "CLOSETMAID" EPOXY COATED STEEL "SUPER SLIDE SYSTEM" W/ CORNER ROUNDER BAR. SUPPORTS TO BE HEAVY DUTY METAL "J" BRACKETS. PROVIDE CLOSET ROD END CAPS AT EACH END.

ALL FINISHES TO BE BRUSHED CHROME.

WIRE SHELVING NOTES | -

#	KEYNOTE DESCRIPTION
1.	CONC. SLAB, 1/4" PER FT. MIN. SLOPE TO LUBE TRENCH REFER TO STRUCT. DWG'S
2.	NOT USED.
3.	2" RECESSED SLAB AT OIL TANK AREA, REFER TO STRUCT. DWG'S.
4.	ELECTRICAL METER, REFER TO ELEC. DWG'S.
5.	NOT USED
6.	5'x6' CONC. LEVEL LANDING.
7.	AIR COMPRESSOR.
8.	THRU-WALL EXHAUST FAN, REFER TO MECH. DWG'S.
9.	WASHER FLUID TANK.
10.	COOLANT TANK.
11.	MOP SINK, REFER TO PLUMB. DWG'S. PROVIDE FRP TO 48" A.F.F. AT ADJACENT WALLS.
12.	OIL INTERCEPTOR (RECESSED), REFER TO PLUMB. DWG'S.
13.	44"x27" USED OIL STEEL TANK.
14.	36"x36" NEW OIL POLY TANK.
15.	3" DIA. PVC LINE UNDER SLAB. USE SWEEP AT TURNS.
16.	1" PVC STUB UP, REFER TO PLUMB. DWG'S.
17.	6" CONC. FILLED PIPE BOLLARD, REFER TO CIVIL DWGS.
18.	4" DOWNSPOUT.
19.	LUBE TRENCH, REFER TO 7/A2.20 & STRUCT. DWG'S.
20.	SAFE, MOUNTED TO WALL, PROVIDE BLOCKING.
21.	TACTILE EXIT SIGNAGE, REFER TO DET. 7/A0.11
22.	ATTIC LADDER; WERNER #AH2210C 22.5"Wx54"Lx8'-11"HT. G.C. TO CONFIRM 20"x30" MIN. CLR. AT ACCESS OPENING. LADDER TO BE COMMERCIAL RATED.
23.	(3) 14" WIRE RACK SHELVES ABOVE COMPRESSOR TANK MOUNTED AT 14" O.C. VERT.
24.	CONDENSING UNIT FOR SPLIT-SYSTEM HEATPUMP @ OFFICE. REFER TO MECH. DWG'S.
25.	(3) SHELVES OVER DOOR AT 4" O.C. VERT.
26.	PLUMBING FIXTURE, REFER TO PLUMBING DWG'S.
27.	FIRE EXTINGUISHER. REFER TO LEGEND BELOW.
28.	REFRIG. ON PLATFORM W. SHELVES ABOVE. REFER TO DET. 16/A2.20
29.	FURNITURE, BY G.C.
30.	OVERHEAD SECTIONAL DOOR, REFER TO DOOR SCHEDULE.
31.	NOT USED.
32.	42"H 2x4 WALL W/ 1x WD. CAP. REFER TO DET. 10/A7.00
33.	3/4" PLYWOOD DECK.
34.	WALL HEATER, REFER TO MECH DWG'S.
35.	6"x2" CONC. CURB AT SIDES OF DEPRESSED SLAB.
36.	2" CONDUIT FOR INTERNET CONNECTION.
37.	TELEPHONE BOARD, REFER TO ELEC. DWG'S.
38.	ELECTRICAL PANEL, REFER TO ELEC. DWG'S.
39.	INSTANTANEOUS WATER HEATER, REFER TO PLUMB. DWG'S.
40.	HOSE BIB, REFER TO PLUMB. DWG'S.

FLOOR PLAN KEYNOTES | -

1. DIMENSIONS AS NOTED IN THE DWG'S. ARE TO THE FACE OF STUD, U.N.O.
2. REFER TO MECHANICAL, PLUMBING, FIRE SUPPRESSION, AND ELECTRICAL DWG'S. FOR ALL EQUIPMENT LOCATIONS DIMENSIONS, AND OTHER REQUIREMENTS.
3. WHERE FLOORING MATERIALS CHANGE, THE CHANGE IS TO OCCUR AT THE CENTERLINE OF THE DOOR. FLOAT FLOOR AS REQUIRED PRIOR TO INSTALLATION OF FLOOR COVERING.
4. MAINTAIN A MINIMUM OF 48" CLEAR UNOBSTRUCTED EMERGENCY EXIT AISLE TO DESIGNATED EXITS.
5. PROVIDE LEVEL FLOOR OR LANDING ON EACH SIDE OF ALL DOORS. THRESHOLD SHALL BE LESS THAN 1/2" HIGH & BEVELED 1:2.
6. EXTERIOR FACE OF FRAMING SHALL ALIGN WITH EXTERIOR EDGE OF CONC. SLAB & CONC. CURB.

GENERAL NOTES | -

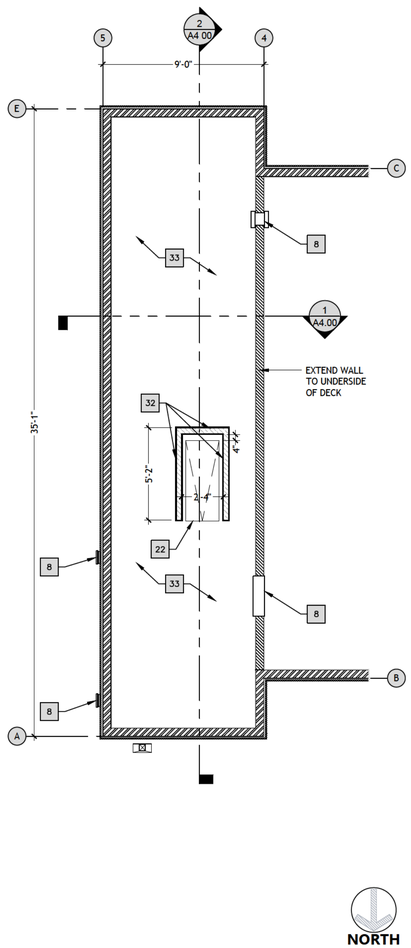

ATTIC PLAN | 1/4" = 1'-0" | 2

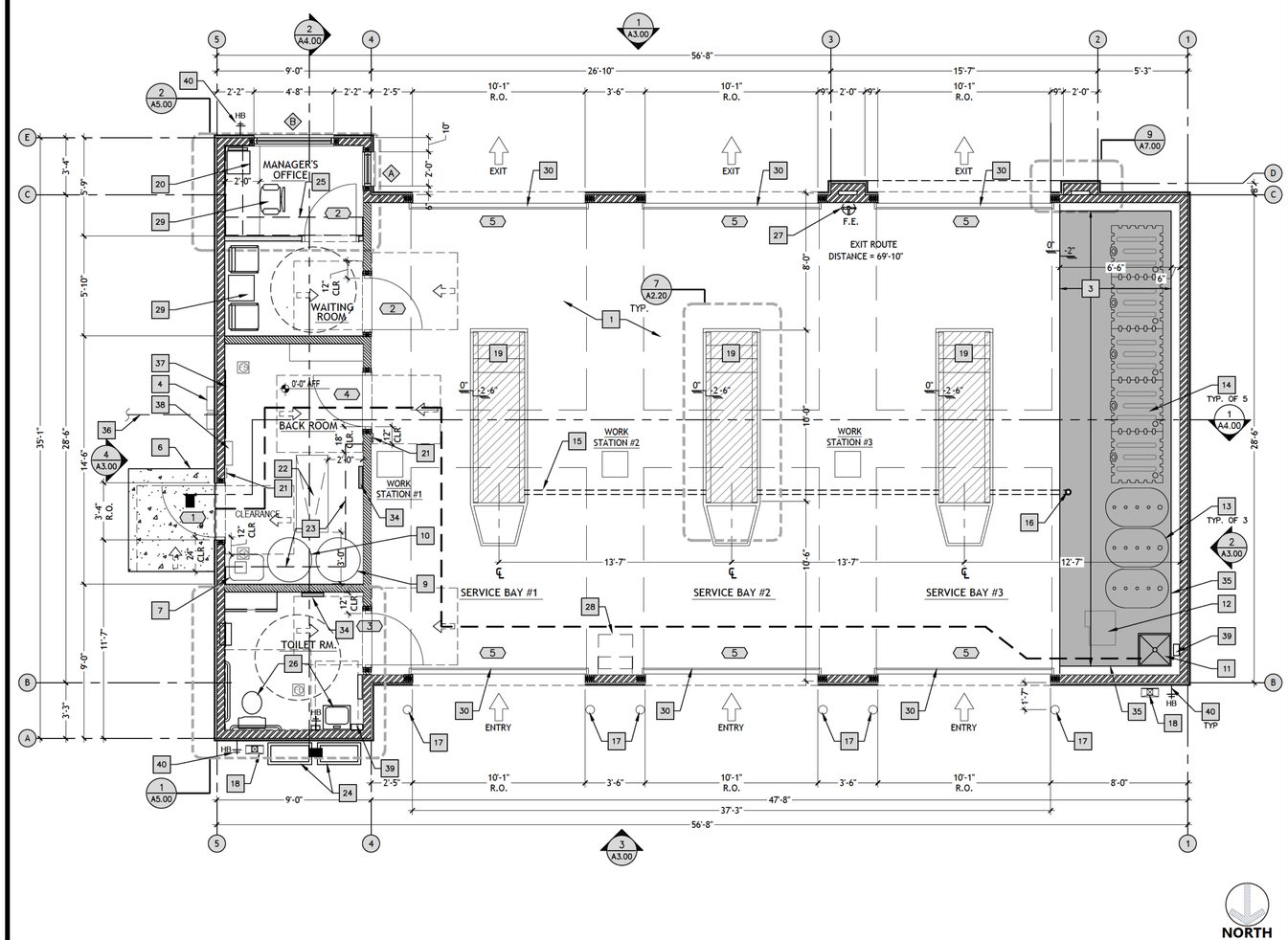

FLOOR PLAN | 1/4" = 1'-0" | 1

SYMBOL	DESCRIPTION
	EXTERIOR WALL- 2x6 WOOD STUDS @ 16" O.C. W/ 1/2" PLYWOOD SHEATHING ON THE INT. SIDE, 1/2" OSB SHEATHING ON THE EXT. SIDE & EIFS FINISH.
	INTERIOR WALL- 2x6 WOOD STUDS @ 16" O.C. W/ 1/2" PLYWOOD SHEATHING EA. SIDE.
	INTERIOR WALL- 2x4 WOOD STUDS @ 16" O.C. W/ 1/2" PLYWOOD SHEATHING EA. SIDE.
	DETAIL INDICATOR
	DOOR SYMBOL
	WINDOW SYMBOL
	ELEVATION SYMBOL
	WINDOW
	DEPRESSED SLAB AREA
	TRENCH AREA
	EGRESS PATH OF TRAVEL FROM FARTHEST POINT
	FLOOR DRAIN, REFER TO PLUMBING DWG'S
	FLOOR SINK, REFER TO PLUMBING DWG'S
F.E.	FIRE EXTINGUISHER: 2A:10B:C; 5 LBS; MODEL# B500 WITH WALL BRACKET 888-16591 BY AMEREX OR APPROVED EQUAL - 75' MAX. TRAVEL DISTANCE TO EXTINGUISHER (CFC 906) - F NAL APPROVAL/LOCATION AS DETERMINED BY FIRE DEPT. INSPECTOR

SYMBOL LEGEND | --

ALTAR GROUP
ARCHITECTURE
ENGINEERING

SEAL:

REGISTERED ARCHITECT JOHN D. LINT OF TEXAS 21410 STATE OF TEXAS
02/21/25

CONSULTANT:

TAKE 5 OIL CHANGE
PROTOTYPE: 3 BAY
5331 WALZEM ROAD
SAN ANTONIO, TX 78218

REV	DATE	DESCRIPTION
1	11/26/24	ISSUE FOR PERMIT
2	02/21/25	RE-ISSUE FOR PERMIT

DRAWN BY: RM
CHECKED BY: RR
ARCH. PROJECT NO.: DB24-023
SHEET NAME: FLOOR PLAN & ATTIC PLAN
SHEET NUMBER: A2.10

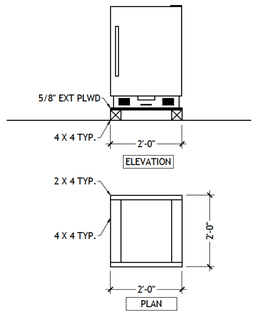

REFRIGERATOR STAND DETAIL | 1/2" = 1'-0" | 16

GENERAL NOTES:

1. MANUFACTURER / VENDOR OF PRE-MANUFACTURED STEPS MUST FIELD VERIFY ACTUAL PIT DEPTH ON SITE AND CONFIRM ALL LOCAL & GOVERNING CODE REQUIREMENTS WILL BE MET PRIOR TO MANUFACTURING STEPS.

2. OSHA STANDARD 29 CFR 1910.24(e), STATES:
   FIXED STAIRS SHALL BE INSTALLED AT ANGLES TO THE HORIZONTAL OF BETWEEN 30 DEG. AND 50 DEG. ANY UNIFORM COMBINATION OF RISE/TREAD DIMENSIONS MAY BE USED THAT WILL RESULT IN A STAIRWAY AT AN ANGLE TO THE HORIZONTAL WITHIN THE PERMISSIBLE RANGE. TABLE D-1 GIVES RISE/TREAD DIMENSIONS WHICH WILL PRODUCE A STAIRWAY WITHIN THE PERMISSIBLE RANGE, STATING THE ANGLE TO THE HORIZONTAL PRODUCED BY EACH COMBINATION. HOWEVER, THE RISE/TREAD COMBINATIONS ARE NOT LIMITED TO THOSE GIVEN IN TABLE D-1.

3. METAL STEP MANUFACTURER (OR EQUAL):
   OFAB, INC.
   1909 NE 25th AVE., OCALA, FL 34470
   PHONE: 352-626-0040; 888-878-5882
   FAX: 352-629-7931
   EMAIL: info@ofab.net

GENERAL NOTES - PIT STEPS | -- | 15

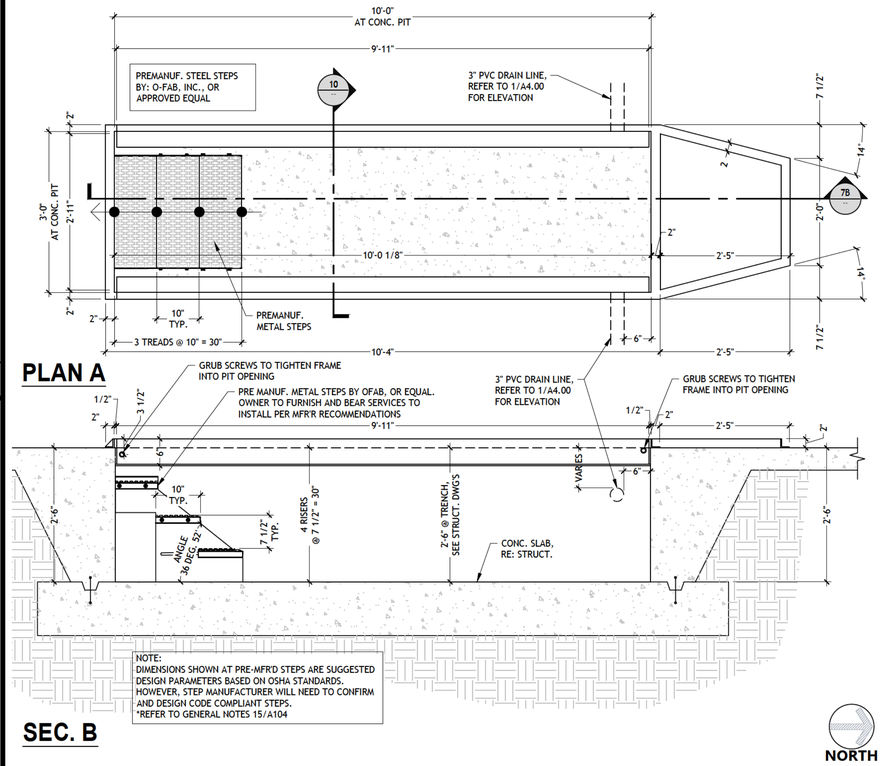

PIT FRAME DETAIL AND SECTION | 3/4" = 1'-0" | 7

GENERAL NOTES:

1. **ALL ITEMS ARE TO BE PURCHASED, PROVIDED AND INSTALLED BY THE GENERAL CONTRACTOR**. UNLESS NOTED OTHERWISE. GENERAL CONTRACTOR SHALL USE NATIONAL PURCHASING ACCOUNTS FOR VENDORS LISTED BELOW.

#	EQUIPMENT SCHEDULE	PURCHASED BY	INSTALLED BY	VENDOR
1.	NEW OIL TOTE TANKS	CORP	BEAR SERVICES	RHINO
2.	USED OIL TANKS	CORP	VENDOR	BEAR SERVICES
3.	PIT FRAMES	CORP	VENDOR	BEAR SERVICES
4.	ROLLING DRAIN PANS	CORP	VENDOR	BEAR SERVICES
5.	OFFICE SHELVING	GC	GC	
6.	OIL SEPARATOR PLUMBER	GC	GC	
7.	COOLANT MACHINE	CORP	OPERATIONS	NUG
8.	PODIUM WORK STATIONS	CORP	OPERATIONS	
9.	COMPUTERS	CORP	OPERATIONS	
10.	COMPUTER MONITORS	CORP	OPERATIONS	
11.	DROP SAFE	CORP	VENDOR	
12.	AIR COMPRESSOR	CORP	VENDOR	BEAR SERVICES
13.	USED OIL PUMPS	CORP	VENDOR	BEAR SERVICES
14.	SERVICE AREA SHELVING	CORP	VENDOR	BEAR SERVICES
15.	BACK ROOM SHELVING	GC	GC	
16.	BATHROOM SHELVING	GC	GC	
17.	HOSE REELS	CORP	VENDOR	BEAR SERVICES
18.	WATER DROPS	CORP	VENDOR	BEAR SERVICES
19.	METAL STEPS	CORP	VENDOR	BEAR SERVICES
20.	AIR LINE	CORP	VENDOR	BEAR SERVICES
21.	ALL INSIDE SIGNAGE (NOT RESTROOM)	CORP	BEAR SERVICES	NUG
22.	OFFICE SHELVING & DESK	GC	GC	
23.	REFRIGERATOR	CORP	OPERATIONS	
24.	WASHER FLUID TANK	CORP	OPERATIONS	

GC GENERAL CONTRACTOR — CORP TAKE 5 CORPORATE
FZ FRANCHISEE — VENDOR PREFERRED INSTALLER

PREFERRED INSTALLER:
BEAR SERVICES, L.P. CONSTRUCTION
P.O. BOX 2296
SPRING, TX 77383
OFFICE (281) 355-8953

FINISHES

TRENCH FINISH
(2) COATS OF EPOXY AT WALLS AND FLOOR OF TRENCHES. RUST-OLEUM 2-PART EPOXY 6500 SYSTEM. COLOR: NAVY GRAY
APPLY FINISH TO RECESSED AREAS INCLUDING USED OIL TANKS AND TOTE TANKS.

SERVICE BAY SLAB FINISH
SEALED CONCRETE COLOR - BUTTERFIELD COLOR SELECT GRADE INTEGRAL CONCRETE COLORANT SG01 CHINCHILLA BROWN 1 BAG PER YARD
GC TO POLISH FLOOR PRIOR TO BEAR SERVICES INSTALL

TAKE 5 OIL CHANGE, LLC
STORAGE SYSTEM REVIEW

SYSTEMS ARE DIVIDED INTO 2 SEPARATE PROCESSES.

1. **USED OIL -**
   AFTER A TAKE 5 TECHNICIAN DIRECTS AND GUIDES THE CUSTOMER OVER A SHALLOW TRENCH THE USED OIL IS DRAINED INTO A ROLLING DRAIN PAN THAT IS POSITIONED UNDER THE VEHICLE. THE OIL FILTER IS ALSO CHANGED ABOVE THE DRAIN PAN. WHEN NECESSARY, THE DRAIN PANS ARE EMPTIED TO DESIGNATED OIL TANKS VIA ¼" GASOLINE-RATED HOSE, ROUTED THROUGH CHASES TO THE STORAGE ROOM. THE HOSES ARE CONNECTED VIA A VACUUM DIAPHRAGM PUMP, SO THE SYSTEM IS TOTALLY NON-PRESSURIZED. 100% OF TAKE 5'S USED OIL AND OIL FILTERS ARE RECLAIMED AND RECYCLED BY OSHA CERTIFIED USED OIL RECYCLING COMPANIES.

2. **NEW OIL -**
   WE STORE NEW BULK OILS IN RHINO GRAVITY FEED SYSTEMS INSIDE THE BAY AREAS. THESE SYSTEMS HAVE NO PUMPS OR PRESSURE, ARE APPROVED BY OSHA AND DOT, AND ARE LOCATED WITHIN A RECESSED AREA WITHIN THE SHOP. TAKE 5 ALSO CARRIES A MINIMUM AMOUNT OF RETAIL BOTTLED OILS FOR SPECIALTY VEHICLES AS NECESSARY.

NOTES -

1. TYPE OF LIQUIDS BEING STORED ARE CLASS IIIB LUBRICANTS ONLY.
2. ALL TANKS ARE ABOVE GROUND, SINGLE WALL. 3 ARE STEEL AND 12 ARE HIGH-DENSITY POLYETHYLENE.
3. VOLUME OF TANKS:
   (3) USED OIL TANKS OF APPROXIMATELY 330 GALLONS EACH
   (9) NEW OIL RHINO TANKS OF 120 GALLONS EACH
   (4) NEW OIL RHINO TANKS OF 220 GALLONS EACH

FOR CONTAINMENT - BULK TANKS ARE PLACED WITHIN RECESSED AREAS. THE RECESSED AREAS ARE CONNECTED VIA 3" CHASES TO THE SHALLOW TRENCHES, PROVIDING SECONDARY CONTAMINATION. EACH TRENCH MEASURES 10' X 3' X 30", YIELDING A TOTAL EXTRA VOLUME OF 1,683 GALLONS, IN ADDITION TO THE RECESSED AREAS WHERE THE TANKS ARE LOCATED.

4. TAKE 5 DOES NOT INCORPORATE DRAINS IN THEIR SHOP, SHALLOW TRENCH, OR STORAGE AREAS. THE ONLY DRAIN IN A TAKE 5 IS LOCATED IN THE RESTROOM.
5. WE MOP OUR FLOORS, RINSING THE MOP IN A MOP SINK THAT IS CONNECTED DIRECTLY TO AN OIL SEPARATOR.
6. THE OIL SEPARATOR IS CLEANED/EMPTIED/MAINTAINED BY THE OSHA CERTIFIED RECYCLING COMPANY THAT COLLECTS AND RECYCLES THE USED OIL.
7. SOME TANKS ARE PLACED ON SHOP FLOOR BETWEEN BAYS.

EQUIPMENT SCHEDULE & NOTES | -

ALTAR GROUP
ARCHITECTURE ENGINEERING
SEAL:
REGISTERED ARCHITECT JOHN D. LINT JR. 21410 STATE OF TEXAS
02/21/25
CONSULTANT:

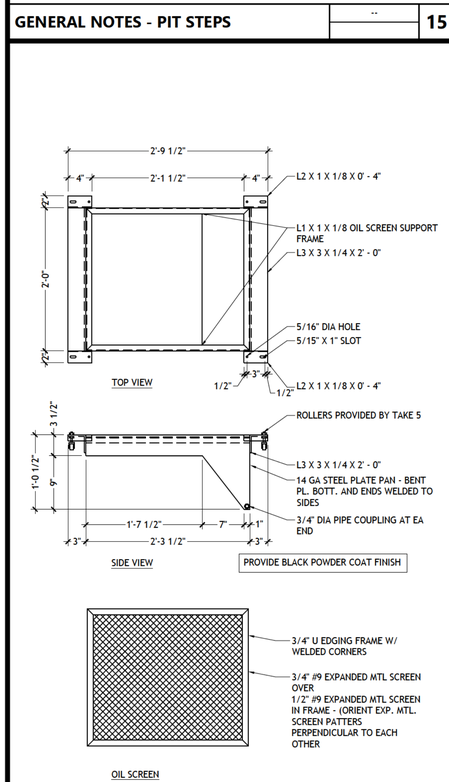

OIL TRAY DETAILS | 1" = 1'-0" | 13

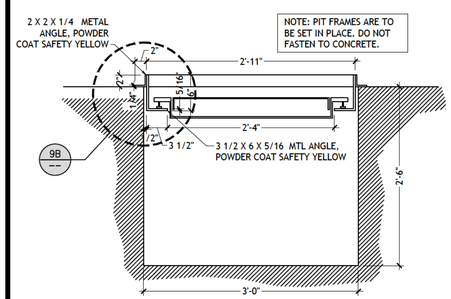

PIT FRAME SECTION | 1" = 1'-0" | 10

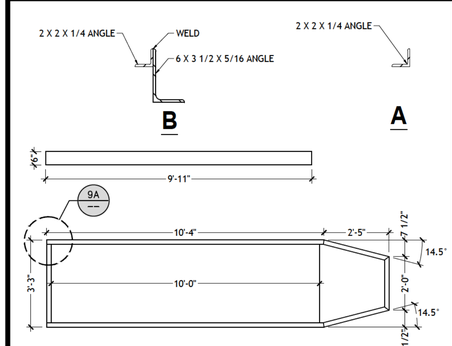

PIT FRAME OUTER FRAME | 3/8" = 1'-0" | 9

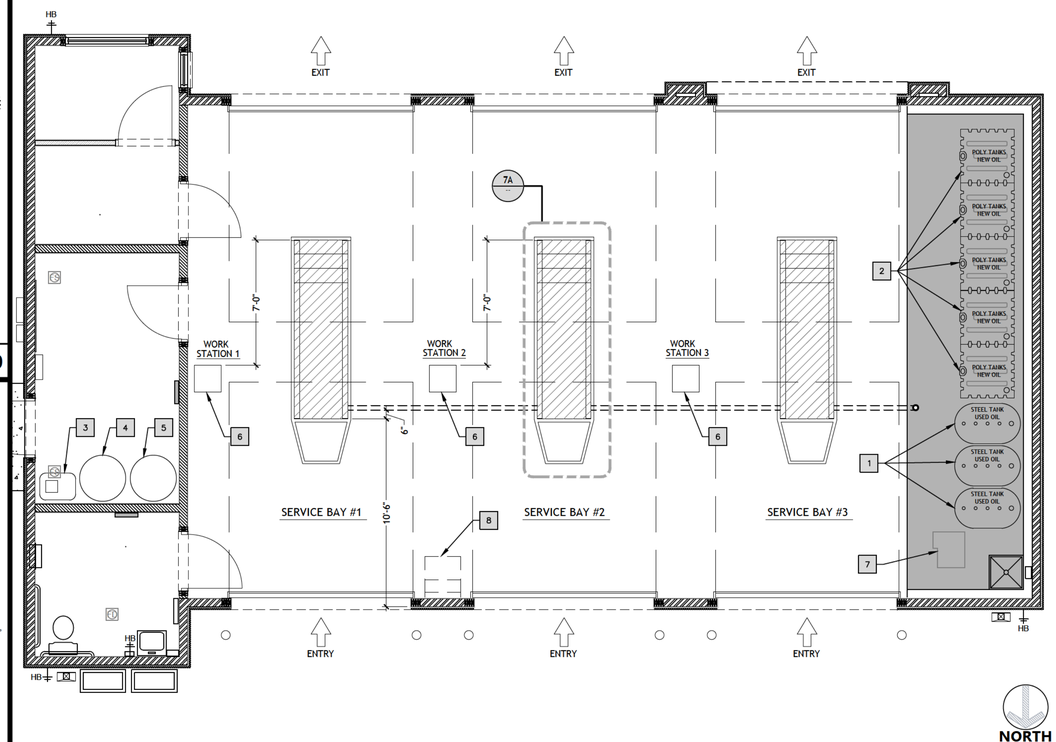

EQUIPMENT PLAN | 1/4" = 1'-0" | 1

#	KEYNOTE DESCRIPTION
1.	USED OIL TANK
2.	NEW OIL TANK
3.	AIR COMPRESSOR
4.	COOLANT TANK
5.	WASHER FLUID TANK
6.	WORK STATION
7.	OIL INTERCEPTOR
8.	REFRIGERATOR

KEYNOTES | -

TAKE 5 OIL CHANGE
PROTOTYPE: 3 BAY
5331 WALZEM ROAD
SAN ANTONIO, TX 78218

REV	DATE	DESCRIPTION
1	11/26/24	ISSUE FOR PERMIT
2	02/21/25	RE-ISSUE FOR PERMIT

DRAWN BY: RM
CHECKED BY: RR
ARCH. PROJECT NO.: DB24-023
SHEET NAME: EQUIPMENT PLAN & SCHEDULE
SHEET NUMBER: A2.20

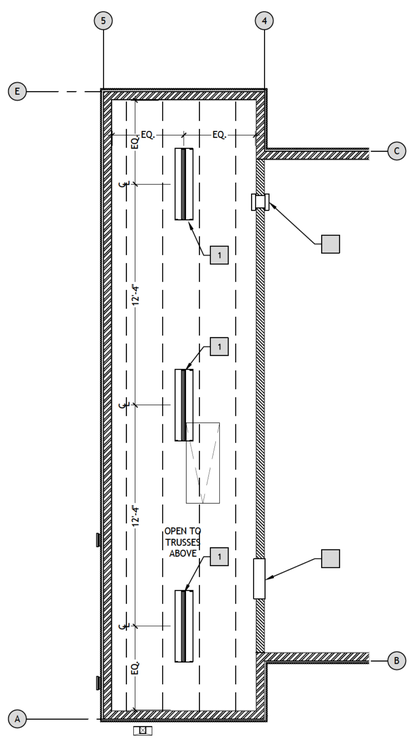

ATTIC REFLECTED CEILING PLAN | 1/4" = 1'-0" | 2

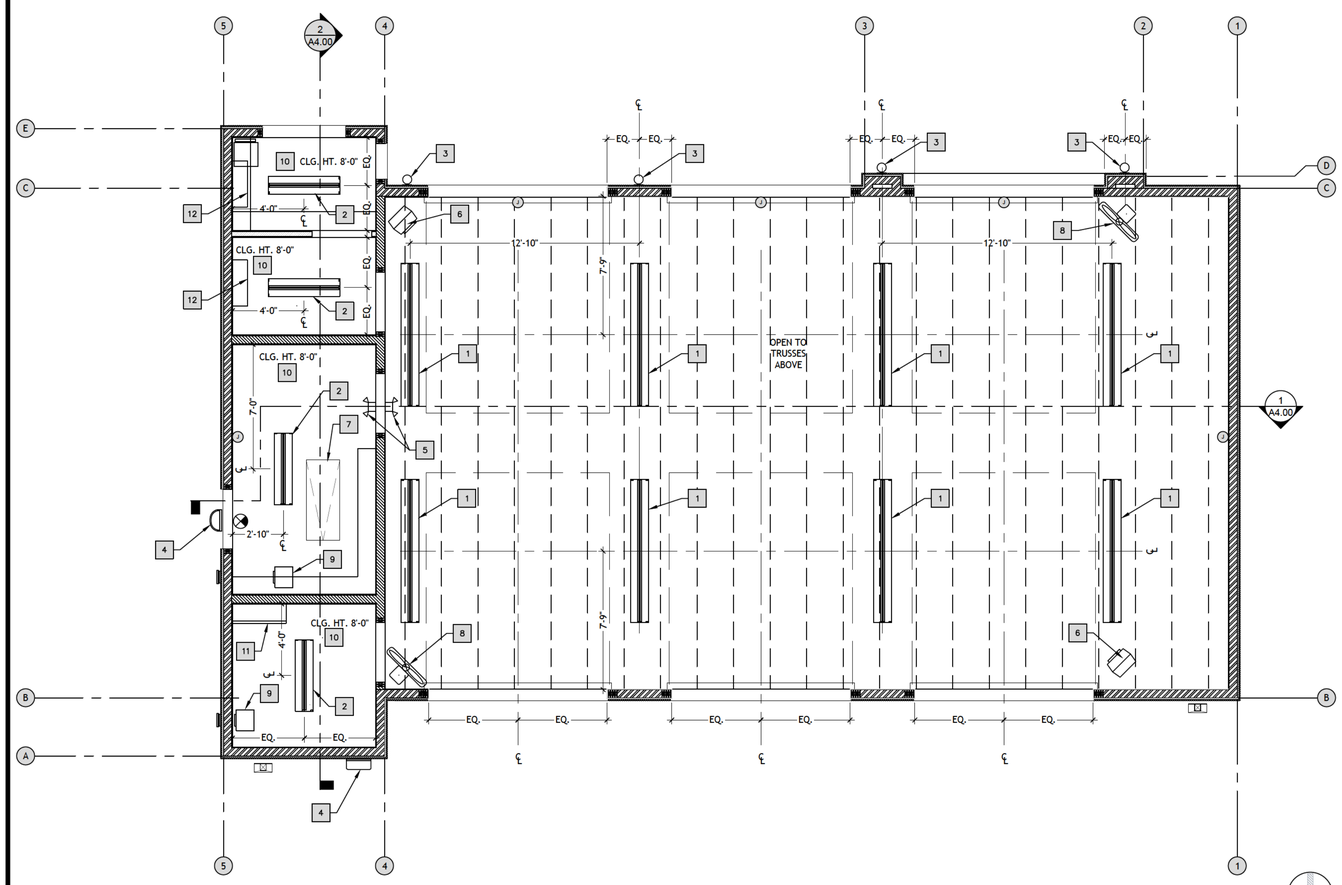

REFLECTED CEILING PLAN | 1/4" = 1'-0" | 1

#	KEYNOTE DESCRIPTION
1.	SUSPENDED LED LIGHT FIXTURE. REFER TO ELEC. DWG'S.
2.	SURFACE MOUNTED LED LIGHT FIXTURE. REFER TO ELEC. DWG'S.
3.	WALL SCONCE LIGHT FIXTURE. REFER TO ELEC. DWG'S.
4.	WALL PACK. REFER TO ELEC. DWG'S.
5.	EMERGENCY EXIT LIGHT FIXTURE. REFER TO ELEC. DWG'S.
6.	SPACE HEATER. REFER TO MECH. DWG'S.
7.	ATTIC ACCESS LADDER, REFER TO DET. 20/A7.00.
8.	SUSPENDED CIRCULATION FAN. REFER TO MECH. DWG'S.
9.	EXHAUST FAN. REFER TO MECH. DWG'S.
10.	PLYWOOD CEILING, PAINT PER FINISH SCHEDULE.
11.	UPPER SHELVING
12.	AIR HANDLER FOR SPLIT-SYSTEM HEAT PUMP. REFER TO MECH. DWG'S.

RCP KEYNOTES

1. REFER TO MECHANICAL, PLUMBING, AND ELECTRICAL DWG'S. FOR ALL EQUIPMENT LOCATIONS, DIMENSIONS, AND OTHER REQUIREMENTS.

RCP GENERAL NOTES

SYMBOL	DESCRIPTION
	4' & 8' HEAVY DUTY INDUSTRIAL FLUORESCENT FIXTURE
	EXTERIOR WALL PACK. SEE EXTERIOR ELEVATIONS FOR MOUNTING HEIGHT
	UP/DOWN LIGHTING WALL SCONCE. SEE EXTERIOR ELEVATIONS FOR MOUNTING HEIGHT
	ILLUMINATED EXIT SIGN WITH BATTERY BACKUP
	EXHAUST FAN - SEE MECHANICAL DWG'S.
	EGRESS LIGHT AND LED EXIT SIGN WITH BATTERY BACKUP
J	J BOX FOR SIGNAGE - SEE ELECTRICAL DWG'S
	HANGING SPACE HEATER

NOTES:
1. SEE ELECTRICAL SHEETS FOR LIGHT FIXTURE SPECIFICATIONS.
2. SEE MECHANICAL SHEETS FOR MECHANICAL UNITS.

SYMBOL LEGEND

ALTAR GROUP
ARCHITECTURE
ENGINEERING

SEAL:

REGISTERED ARCHITECT
JOHND LINT OLIN
21410
STATE OF TEXAS
02/21/25

CONSULTANT:

TAKE 5 OIL CHANGE
PROTOTYPE: 3 BAY
5331 WALZEM ROAD
SAN ANTONIO, TX 78218

REV	DATE	DESCRIPTION
1	11/26/24	ISSUE FOR PERMIT
2	02/21/25	RE-ISSUE FOR PERMIT

DRAWN BY: RM
CHECKED BY: RR
ARCH. PROJECT NO.: DB24-023
SHEET NAME: REFLECTED CEILING PLAN
SHEET NUMBER: A2.30

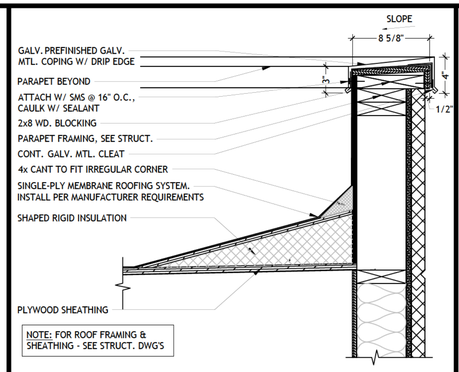

ROOF CRICKET DETAIL | 1 1/2" = 1'-0" | **3**

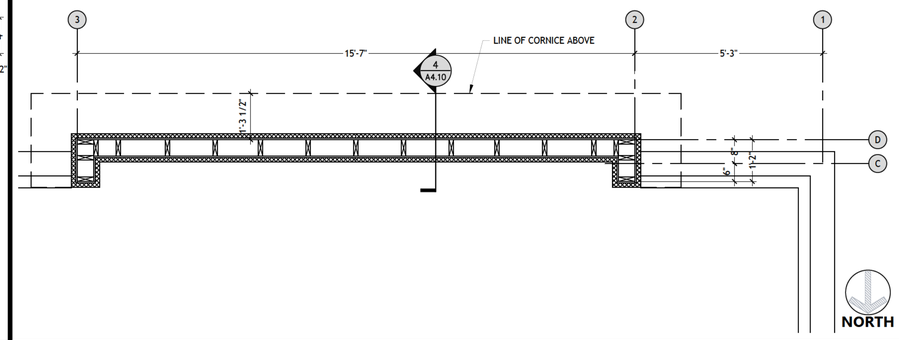

ENLARGED TOWER DETAIL | 1/2" = 1'-0" | **2**

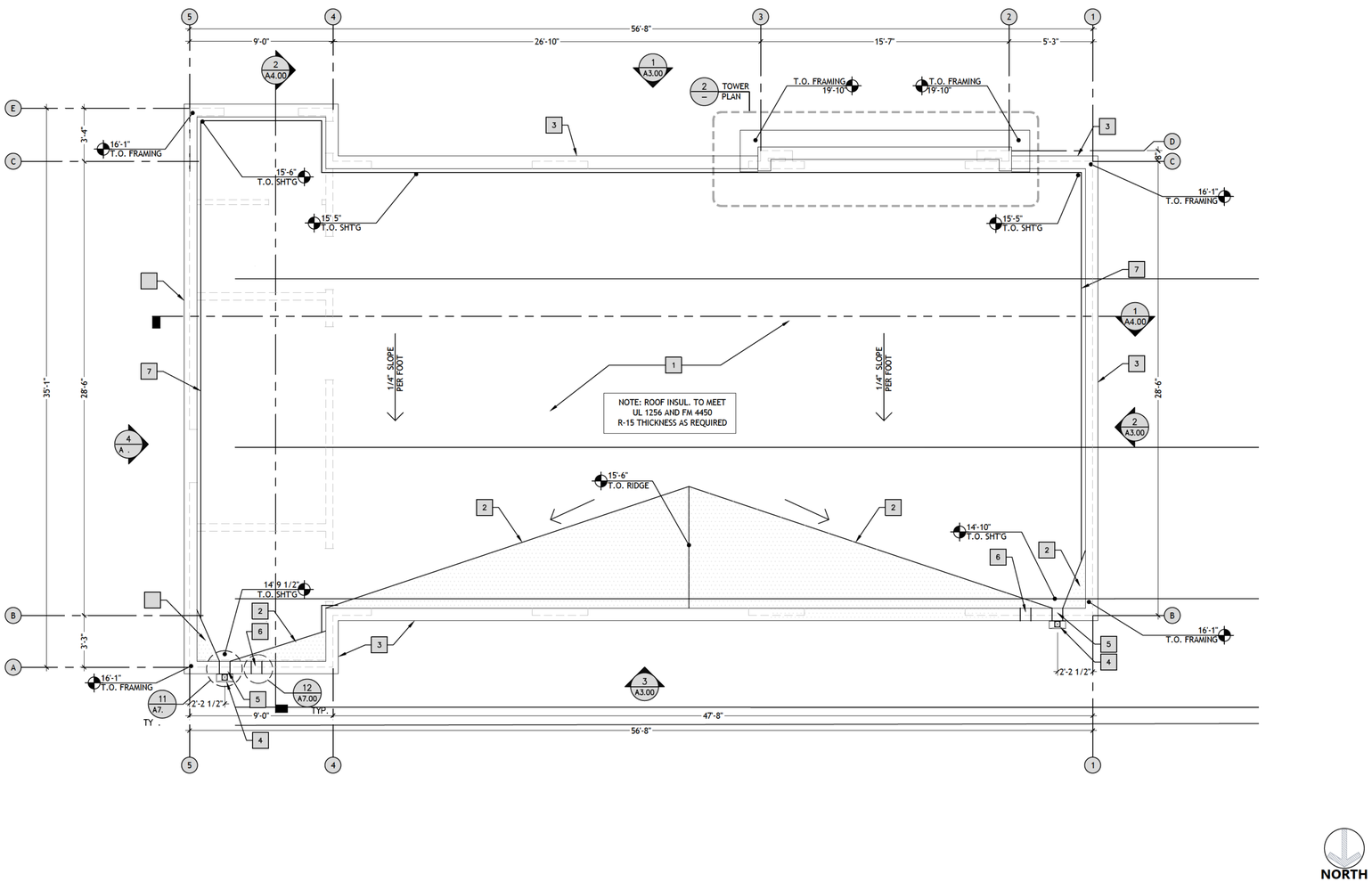

ROOF PLAN | 1/4" = 1'-0" | **1**

#	KEYNOTE DESCRIPTION
1.	TPO ROOFING MEMBRANE.
2.	TAPERED ROOF INSULATION CRICKET, REFER TO DET. 3/A2.50
3.	PREFINISHED GALV. MTL. COPING.
4.	LEADERHEAD AND 4x5 DOWNSPOUT.
5.	6x8 PRIMARY SCUPPER, REFER TO DET. 11/A7.00
6.	6x12 OVERFLOW SCUPPER, REFER TO DET. 12/A7.00
7.	CANT STRIP, REFER TO DET. 3/A7.00

KEYNOTES

1. ALL RIGID ROOF INSULATION TO BE POLYISOCYANURATE FOAM CORE.
2. ROOFING MEMBRANE TO BE MECHANICALLY FASTENED TPO.
3. CONTRACTOR TO VERIFY MEMBRANE HAS MIN. 15 YEAR WARRANTY.
4. ALL ROOF AREAS SHALL SLOPE TO FACILITATE WATER DRAINAGE. G.C. SHALL CONFIRM THAT ALL AREAS ARE PROVIDED WITH POSITIVE ROOF DRAINAGE PRIOR TO SHEATHING ROOF.
5. ROOF CONTRACTOR SHALL PROVIDE A CERTIFICATE STATING THAT THE ROOF SYSTEM HAS BEEN INSTALLED PER MANUFACTURER'S REQUIREMENTS.
6. G.C. SHALL CONFIRM THAT ALL ROOF DRAINS ARE LOCATED AT THE LOWEST POINT OF THE ROOF.
7. G.C. SHALL VERIFY SIZE AND LOCATION OF ALL ROOF OPENINGS, VENTS, PIPES, ETC. WITH ALL TRADES & OWNERS REP.
8. SEE MECHANICAL, ELECTRICAL, AND PLUMBING DRAWINGS FOR OPENINGS, DUCTS, AND VENTS THROUGH THE ROOF THAT MAY NOT BE SHOWN ON THE ARCHITECTURAL ROOF PLAN. PROVIDE FLASHING AND COUNTER-FLASHING PER ROOFING MANUFACTURER'S WRITTEN RECOMMENDATIONS.
9. FOR ROOF DRAINAGE CALCULATIONS SEE PLUMBING DWG'S. THIS INCLUDES ROOF DRAIN AND OVERFLOW SIZES ALONG WITH TRIBUTARY AREAS.
10. FOR ALL ROOF PENETRATIONS REFER TO DETAILS 14/A7.00 & 15/A7.00.

GENERAL NOTES | -

WARRANTY

UPON COMPLETION AND INSPECTION BY AN AUTHORIZED REPRESENTATIVE OF THE ROOFING MANUFACTURER, PROVIDE THE OWNER WITH A WRITTEN WARRANTY, SIGNED BY THE ROOFING MANUFACTURER AND THE AUTHORIZED INSTALLER, AGREEING TO REPLACE AND/OR REPAIR DEFECTIVE MATERIALS AND WORKMANSHIP FOR A PERIOD OF (MIN) FIFTEEN (15) YEARS FROM THE DATE OF SUBSTANTIAL COMPLETION.

WARRANTY NOTES | -

ALTAR GROUP

ARCHITECTURE ENGINEERING

SEAL:

REGISTERED ARCHITECT JOHND LINTON 21410 STATE OF TEXAS

02/21/25

CONSULTANT:

TAKE 5 OIL CHANGE

PROTOTYPE: 3 BAY

5331 WALZEM ROAD
SAN ANTONIO, TX 78218

REV	DATE	DESCRIPTION
1	11/26/24	ISSUE FOR PERMIT
2	02/21/25	RE-ISSUE FOR PERMIT

DRAWN BY: RM
CHECKED BY: RR
ARCH. PROJECT NO.: DB24-023
SHEET NAME: ROOF PLAN
SHEET NUMBER: **A2.50**

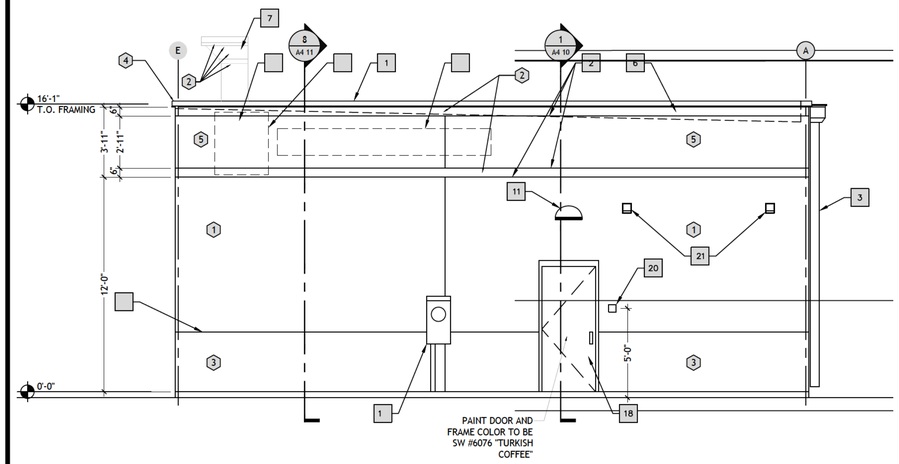

EXTERIOR ELEVATION 1/4" = 1'-0" **4**

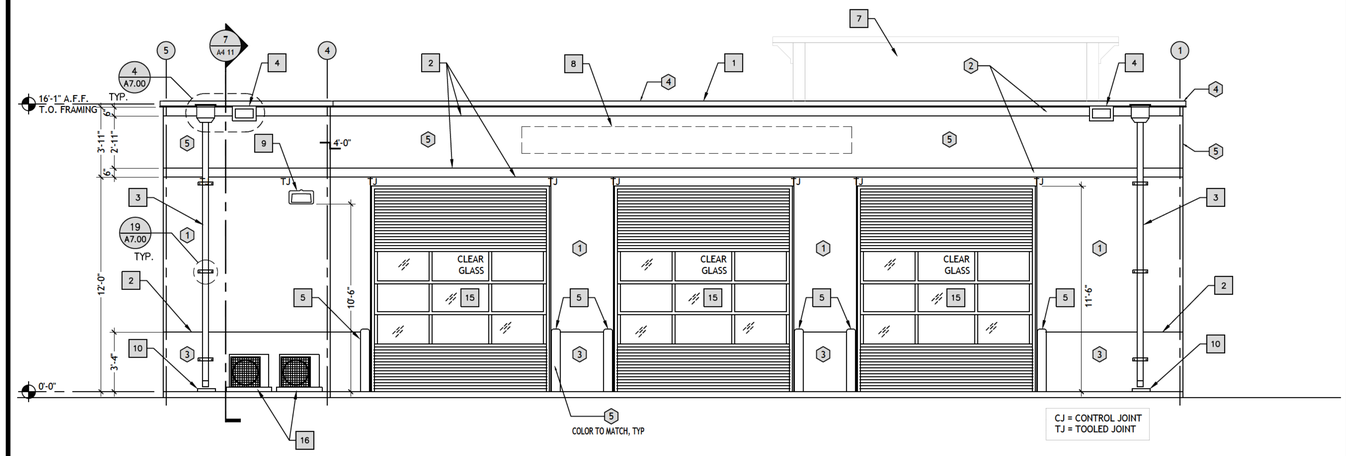

EXTERIOR ELEVATION 1/4" = 1'-0" **3**

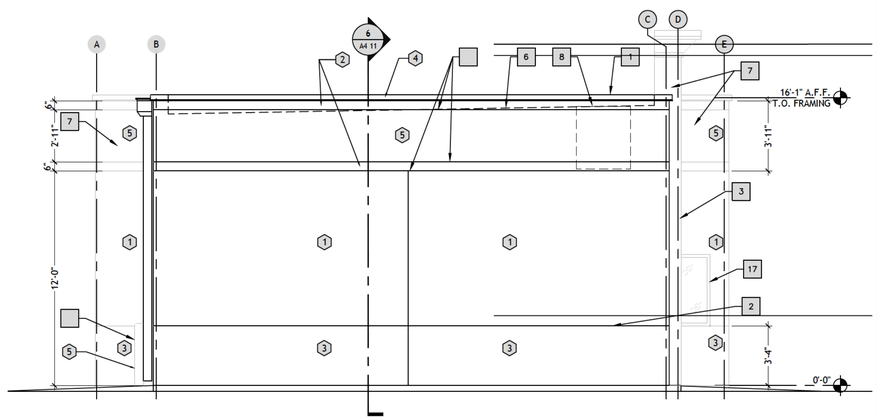

EXTERIOR ELEVATION 1/4" = 1'-0" **2**

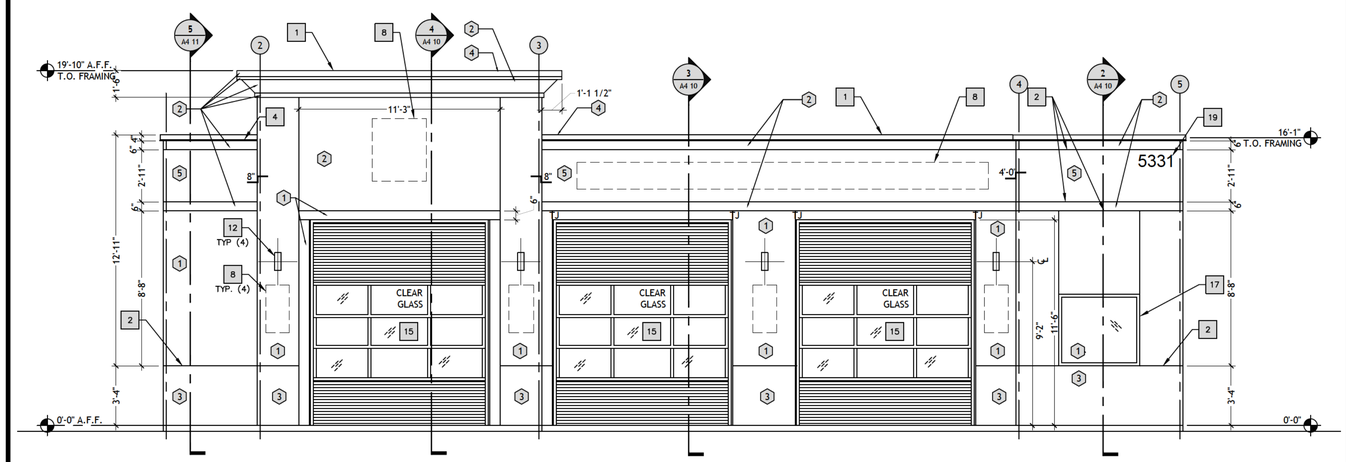

EXTERIOR ELEVATION 1/4" = 1'-0" **1**

KEYNOTE DESCRIPTION

1. PREFINISHED GALV. MTL. COPING.
2. 'V' JOINT IN EIFS, REFER TO DET. 2/A7.00
3. PREFINISHED MTL. DOWNSPOUT AND LEADERHEAD W/ (3) STRAP ANCHORS PER D.S., PAINT DARK BRONZE. REFER TO DET. 11/A7.00
4. PREFINISHED MTL. OVERFLOW SCUPPER, PAINT DARK BRONZE. REFER TO DET. 12/A7.00
5. 6" DIA. CONC. FILLED PIPE BOLLARD, REFER TO CIVIL DWGS.
6. ROOF LINE BEYOND.
7. BUILDING BEYOND.
8. SIGNAGE, BY G.C.
9. WALL PACK LIGHTING. REFER TO ELEC. DWG'S.
10. 1x2 SPLASHBLOCK OR CONNECT TO STORM DRAIN, REFER TO CIVIL DWG'S.
11. LED LIGHT FIXTURE, REFER TO ELEC. DWG'S.
12. SCONCE LIGHTING, REFER TO ELEC. DWG'S.
13. ELEC. PANEL & METER, PAINT DARK BRONZE. REFER TO ELEC. DWG'S.
14. NOT USED.
15. METAL ROLL-UP DOOR. REFER TO DOOR SCHEDULE A6.00.
16. CONDENSING UNIT FOR SPLIT-SYSTEM HEAT PUMP. REFER TO MECH. DWG'S.
17. WINDOW, REFER TO WINDOWS SCHEDULE A6.00.
18. HM DOOR, REFER TO DOOR SCHEDULE A6.00.
19. BUILDING ADDRESS SHALL BE PLAINLY LEGIBLE AND VISIBLE FROM THE STREET FRONTING THE PROPERTY. MIN. 6" HIGH NUMBERS SHALL CONTRAST WITH THEIR BACKGROUND, REFER TO JURISDICTION FIRE PREVENTION CODE REQUIREMENTS. ADDRESS NUMBERS SHALL BE 6" BLACK ALUMINUM FLOATING OR FLAT MODERN HOUSE NUMBERS 0-9 BY MONTAGUE' METAL PRODUCTS, INC.; COLOR: BLACK WITH 1.0 STROKE. OR EQUAL.
20. KNOX BOX TO BE 3200 SERIES, RECESSED AND INSTALLED AT A MIN. HT. OF 5'-0" TO 6'-0" MAX. THE FIRE DEPT. ALERT DECAL IS TO BE MOUNTED ON THE DOOR OR FRAME OF BUILDING MAIN ENTRANCE. KEYS TO BE PLACE INTO THE KNOX BOX WILL BE DETERMINED BY JURISDICTION FIRE PREVENTION STAFF. ALL PER JURISDICTION FIRE DEPT. REQUIREMENTS.
21. EXHAUST VENT, REFER TO MECH DWG'S. VENT FINISH TO MATCH ATTACHED WALL FINISH.

KEYNOTES --

EXTERIOR FINISH SCHEDULE

NO.	AREA	COATS	COLOR
1	EIFS MAIN COLOR	-	MATCH SW COLOR #7693, STONEBRIAR
2	EIFS ACCENT BAND	-	MATCH SW COLOR #7678, COTTAGE CREAM
3	EIFS WAINSCOT	-	MATCH SW COLOR #6097, STURDY BROWN
4	COPING / CORNICE	-	MATCH SW COLOR #6871, POSITIVE RED
5	EIFS SECONDARY COLOR	-	MATCH SW COLOR #6871, POSITIVE RED

EXTERIOR FINISH SCHEDULE --

ALTAR GROUP

ARCHITECTURE ENGINEERING

SEAL:

REGISTERED ARCHITECT JOHND LINTON 21410 STATE OF TEXAS

02/21/25

CONSULTANT:

TAKE 5 OIL CHANGE

PROTOTYPE: 3 BAY

5331 WALZEM ROAD
SAN ANTONIO, TX 78218

REV	DATE	DESCRIPTION
1	11/26/24	ISSUE FOR PERMIT
2	02/21/25	RE-ISSUE FOR PERMIT

DRAWN BY: RM
CHECKED BY: RR
ARCH. PROJECT NO.: DB24-023
SHEET NAME: EXTERIOR ELEVATIONS
SHEET NUMBER: **A3.00**

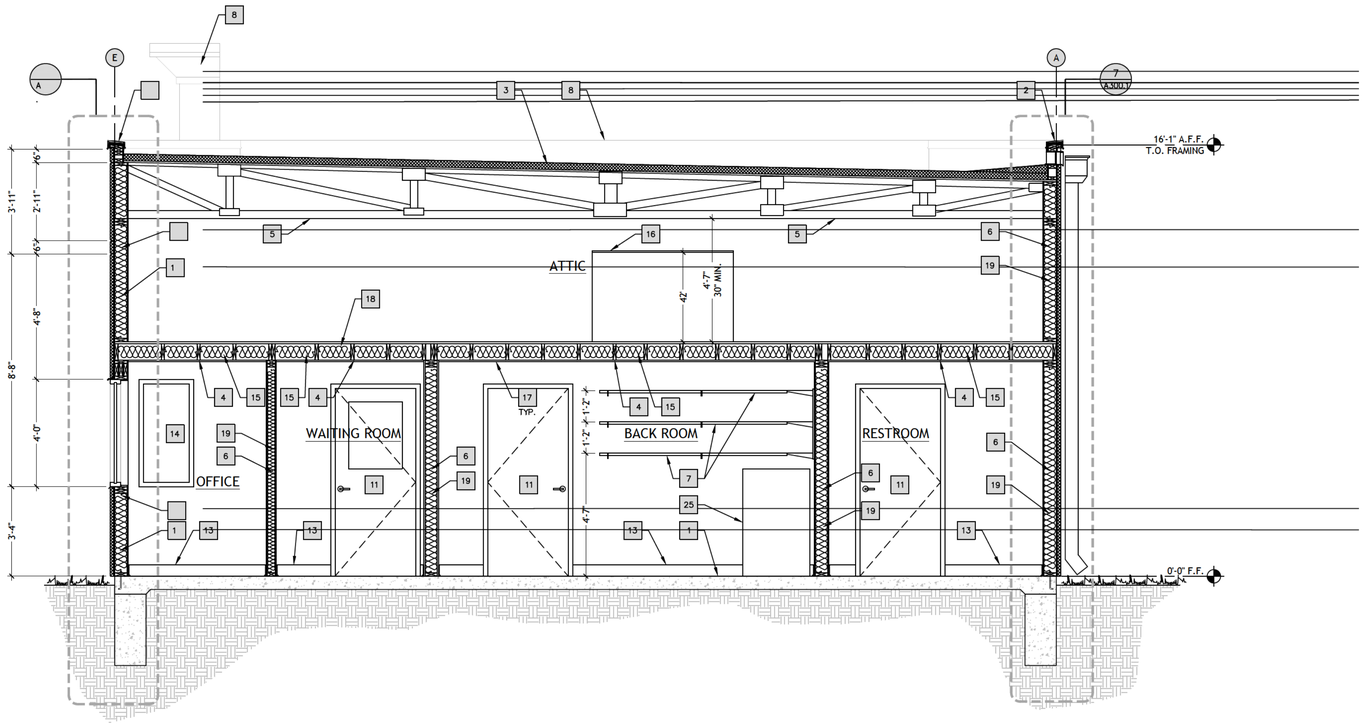

BUILDING SECTION 3/8" = 1'-0" **2**

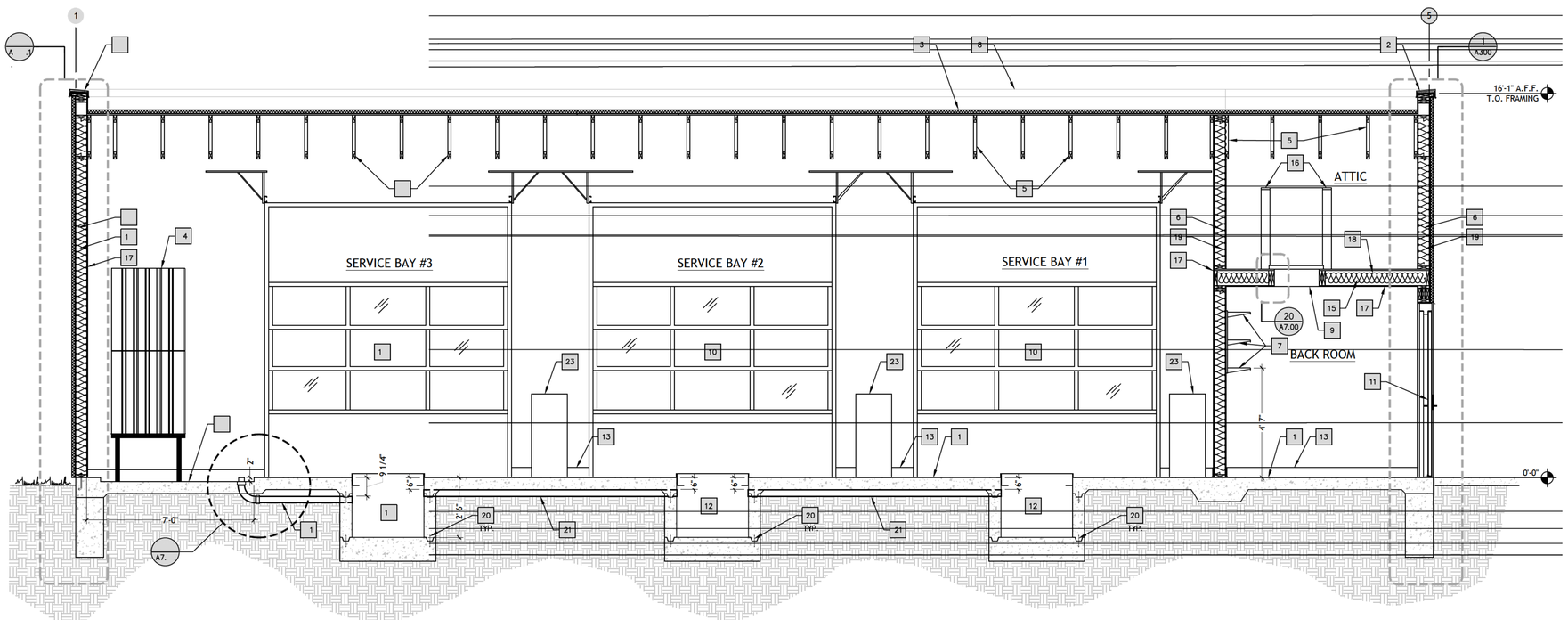

BUILDING SECTION 3/8" = 1'-0" **1**

#	KEYNOTE DESCRIPTION
1.	CONC. SLAB, REFER TO STRUCT. DWG'S.
2.	PARAPET METAL COPING.
3.	TPO ROOFING MEMBRANE O/ RIGID INSULATION O/ PLYWOOD SHEATHING.
4.	2x WOOD JOISTS, REFER TO STRUCT. DWG'S.
5.	WOOD TRUSS, BY G.C.
6.	R-19 BATT INSULATION AT WALLS.
7.	SHELVING, (3) SHELVES @ 14" O.C. VERT.
8.	BUILDING BEYOND.
9.	ATTIC ACCESS LADDER.
10.	ROLL-UP DOORS, REFER TO DOOR SCHED. A6.00.
11.	DOOR, REFER TO DOOR SCHED. A6.00.
12.	LUBE TRENCH, REFER TO SHEET 7/A2.20 & STRUCT DWG'S.
13.	VINYL BASE, REFER TO FINISH SCHED. A6.00.
14.	WINDOW, REFER TO WINDOW SCHED. A6.00.
15.	R-30 BATT INSULATION AT CEILING.
16.	1x6 WOOD CAP.
17.	1/2" PLYWOOD, PAINTED.
18.	3/4" PLYWOOD, PAINTED.
19.	2x WOOD STUDS @ 16" O.C.
20.	CONT. WATERSTOP, CONTINUOUS AROUND TRENCH, REFER TO STRUCT DWG'S.
21.	3" DIA. PVC. USE SWEEPS AT TURNS.
22.	2" DEPRESSED SLAB AT OIL STORAGE AREAS.
23.	WORK STATION. REFER TO EQUIP. SCHEDULE.
24.	NEW OIL STORAGE TANK. REFER TO EQUIP. SCHEDULE.
25.	COOLANT TANK. REFER TO EQUIP. SCHEDULE.

KEYNOTES

ALTAR GROUP

ARCHITECTURE
ENGINEERING

SEAL:

REGISTERED ARCHITECT
JOHND LINTON
21410
STATE OF TEXAS
02/21/25

CONSULTANT:

TAKE 5 OIL CHANGE

TAKE 5 OIL CHANGE
PROTOTYPE: 3 BAY
5331 WALZEM ROAD
SAN ANTONIO, TX 78218

REV	DATE	DESCRIPTION
1	11/26/24	ISSUE FOR PERMIT
2	02/21/25	RE-ISSUE FOR PERMIT

DRAWN BY: AH
CHECKED BY: JL
ARCH. PROJECT NO.: DB24-023
SHEET NAME: BUILDING SECTIONS
SHEET NUMBER: **A4.00**

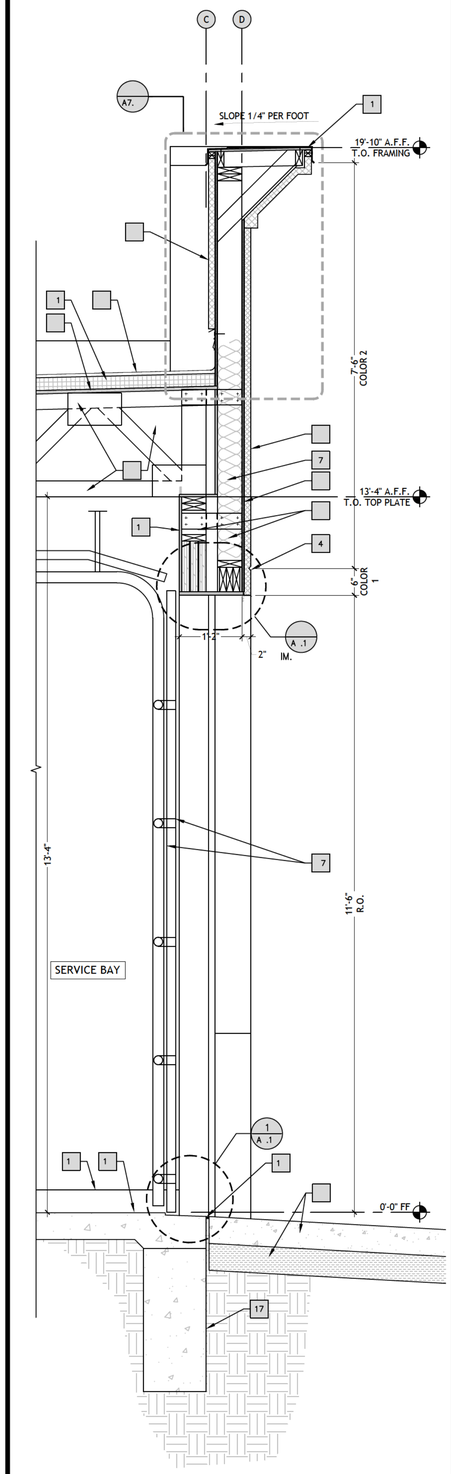

WALL SECTION 3/4" = 1'-0" 4

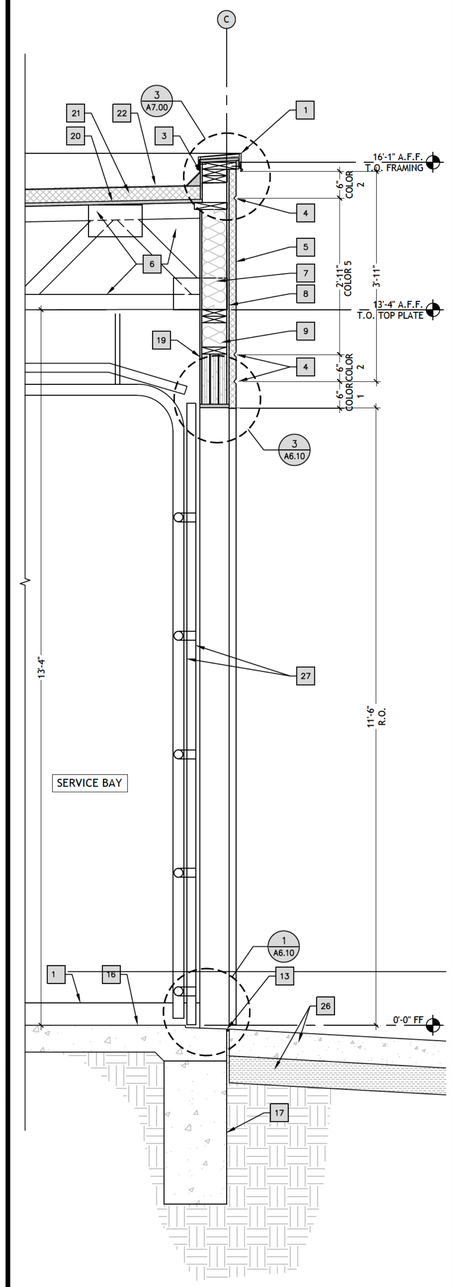

WALL SECTION 3/4" = 1'-0" 3

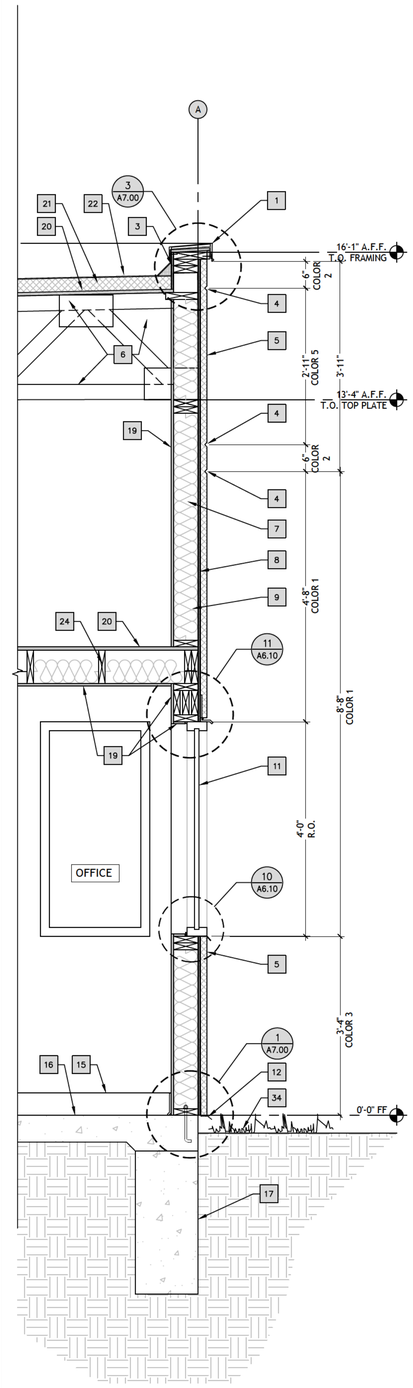

WALL SECTION 3/4" = 1'-0" 2

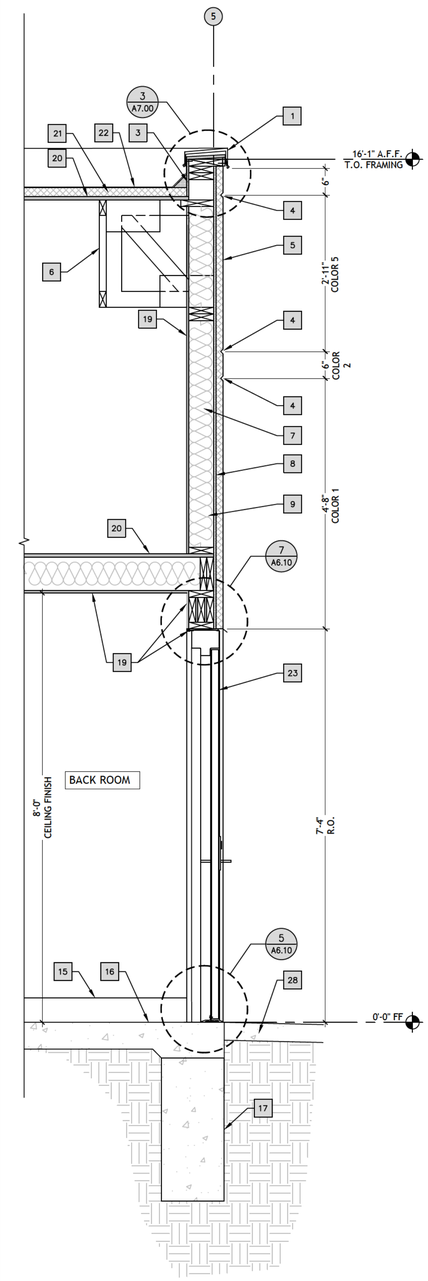

WALL SECTION 3/4" = 1'-0" 1

#	KEYNOTE DESCRIPTION
1.	PREFINISHED MTL. COPING.
2.	P.T. 2x WD. BLOCKING.
3.	1/2" PLYWOOD SHEATHING.
4.	1" "V" JOINT IN EIFS, REFER TO DET. 2/A7.00
5.	1 1/2" EIFS. REFER TO EXT. ELEVS FOR COLOR.
6.	ROOF TRUSS, REFER TO TRUSS DWG'S BY G.C.
7.	R-19 BATT INSULATION TO EXTEND TO TOP OF ROOF.
8.	OSB SHEATHING, REFER TO STRUCT. FOR LOCATIONS. STRUCT. PLYWOOD AS OCCURS.
9.	2x WD. STUDS @ 16" O.C. W/ 1/2" PLYWD SHEATHING & 30 LB. FELT MEMBRANE.
10.	NOT USED.
11.	WINDOW. REFER TO WINDOW SCHED. A6.00.
12.	WEEP SCREED FLASHING.
13.	JOINT FILLER.
14.	NOT USED.
15.	VINYL BASE.
16.	CONC. SLAB, REFER TO STRUCT.
17.	CONC. FOOTING, REFER TO STRUCT.
18.	NOT USED.
19.	1/2" PLYWOOD, PAINT PER FINISH SCHEDULE.
20.	3/4" EXT. PLYWOOD. REFER TO STRUCT. DWG'S.
21.	3" RIGID ROOF INSULATION, MIN. R-15 .
22.	TPO ROOF MEMBRANE.
23.	H.M. DOOR, PER DOOR SCHEDULE.
24.	2x WD. JOISTS, REFER TO STRUCT, DWG'S.
25.	NOT USED.
26.	CONC. PAVING, REFER TO CIVIL DWG'S.
27.	OVERHEAD SECTIONAL DOOR & TRACK, REFER TO DOOR SCHED.
28.	CONC. SIDEWALK, REFER TO CIVIL DWG'S.
29.	NOT USED.
30.	ROOF CRICKET. REFER TO ROOF PLAN.
31.	PREFINISHED MTL. SCUPPER, PAINT DARK BRONZE. REFER TO DETAIL 12/A7.00.
32.	PREFINISHED MTL. DOWNSPOUT AND LEADERHEAD W/ (3) STRAP ANCHORS PER D.S., PAINT DARK BRONZE.
33.	NOT USED.
34.	LANDSCAPE, REFER TO LANDSCAPE DWG'S.
35.	6"x2" CONC. CURB AT PERIMETER OF DEPRESSED SLAB. REFER TO STRUCT. DWG'S.

KEYNOTES

GENERAL NOTES

1. REFER TO EXTERIOR ELEVATIONS FOR COLORS & FINISHES.
2. WHERE NOT OTHERWISE ALREADY PROVIDED BY BLOCKING INCLUDED IN THE STRUCTURAL DESIGN OF THE EXTERIOR WALLS, BLOCKING BETWEEN STUDS AND OF SAME MATERIAL, IS TO BE INSTALLED SO THAT THERE IS NO CLEAR VERTICAL GAP GREATER THAN 10'.
3. EIFS TO BE DRAINABLE SYSTEM.

ALTAR GROUP

ARCHITECTURE
ENGINEERING

SEAL:

REGISTERED ARCHITECT
JOHN D. LINT JR.
21410
STATE OF TEXAS
02/21/25

CONSULTANT:

TAKE 5 OIL CHANGE
PROTOTYPE: 3 BAY
5331 WALZEM ROAD
SAN ANTONIO, TX 78218

REV	DATE	DESCRIPTION
1	11/26/24	ISSUE FOR PERMIT
2	02/21/25	RE-ISSUE FOR PERMIT

DRAWN BY: AH
CHECKED BY: JL
ARCH. PROJECT NO.: DB24-023
SHEET NAME: WALL SECTIONS
SHEET NUMBER: A4.10

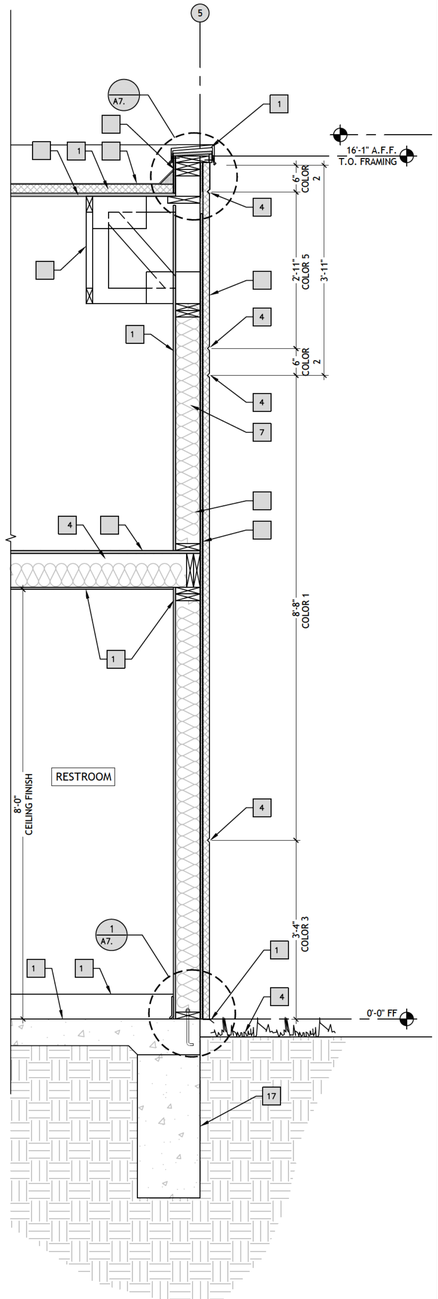

WALL SECTION 3/4" = 1'-0" **8**

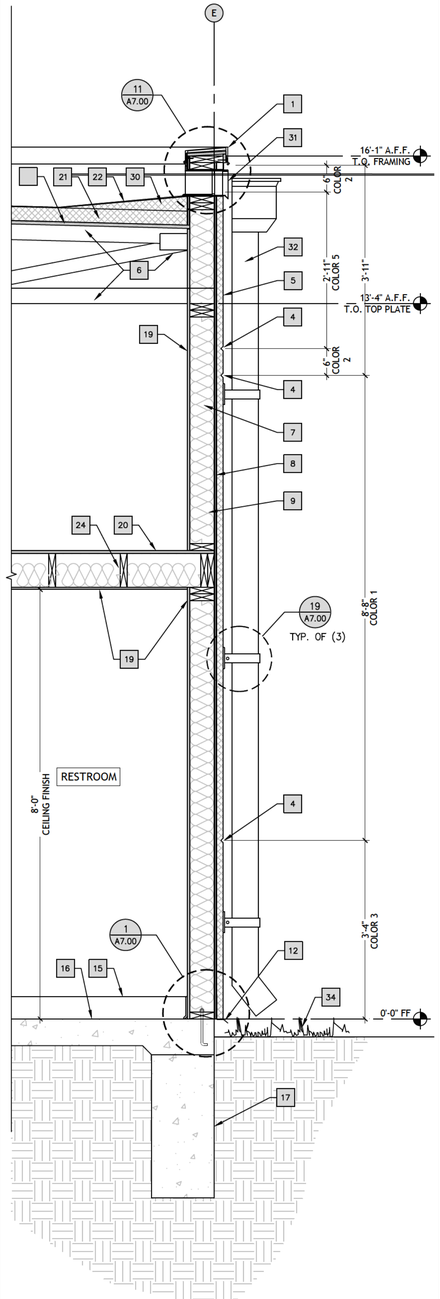

WALL SECTION 3/4" = 1'-0" **7**

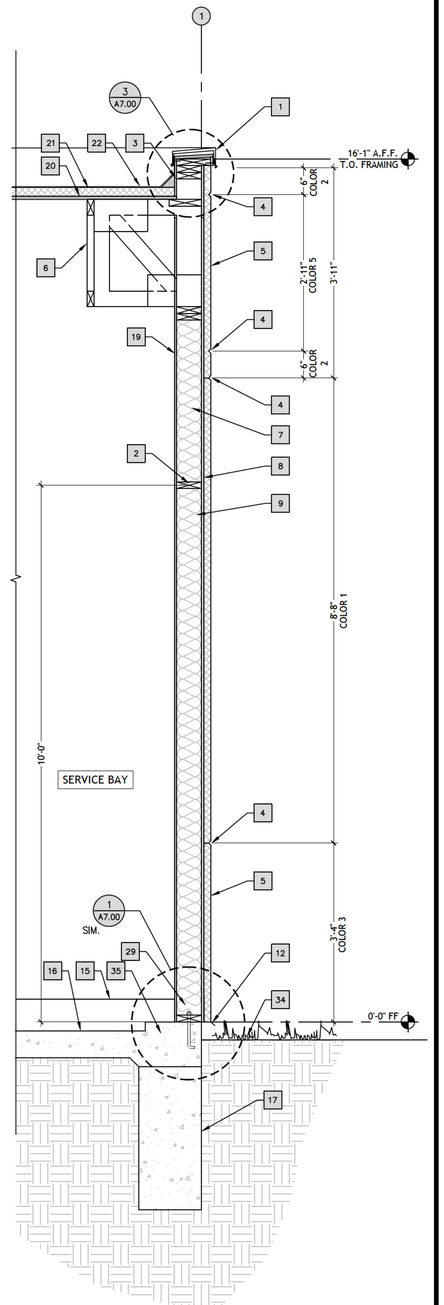

WALL SECTION 3/4" = 1'-0" **6**

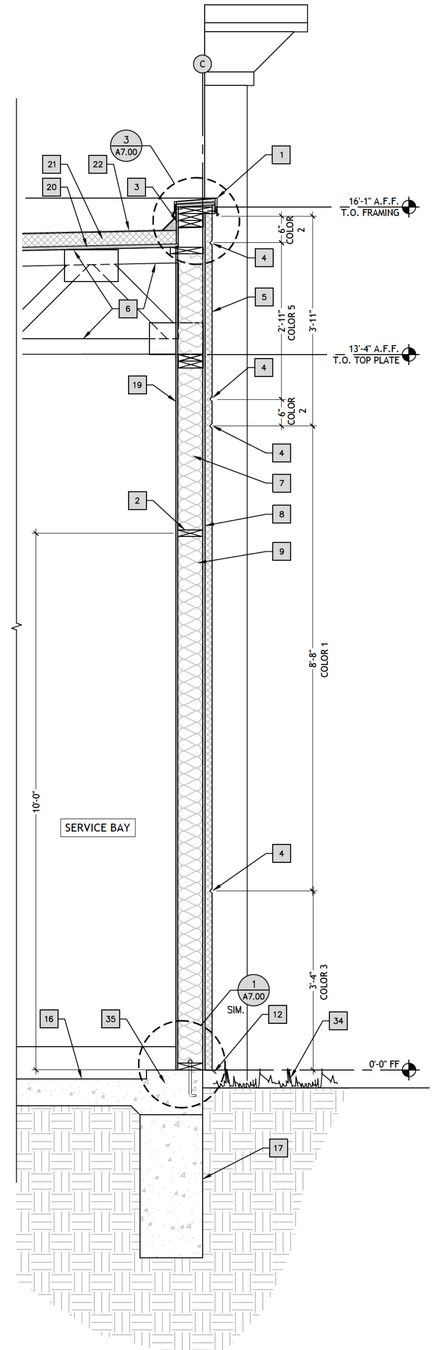

WALL SECTION 3/4" = 1'-0" **5**

#	KEYNOTE DESCRIPTION
1.	PREFINISHED MTL. COPING.
2.	P.T. 2x WD. BLOCKING.
3.	1/2" PLYWOOD SHEATHING.
4.	1" "V" JOINT IN EIFS, REFER TO DET. 2/A7.00
5.	1 1/2" EIFS. REFER TO EXT. ELEVS FOR COLOR.
6.	ROOF TRUSS, REFER TO TRUSS DWG'S BY G.C.
7.	R-19 BATT INSULATION TO EXTEND TO TOP OF ROOF.
8.	OSB SHEATHING, REFER TO STRUCT. FOR LOCATIONS. STRUCT. PLYWOOD AS OCCURS.
9.	2x WD. STUDS @ 16" O.C. W/ 1/2" PLYWD SHEATHING & 30 LB. FELT MEMBRANE.
10.	NOT USED.
11.	WINDOW. REFER TO WINDOW SCHED. A6.00.
12.	WEEP SCREED FLASHING.
13.	JOINT FILLER.
14.	NOT USED.
15.	VINYL BASE.
16.	CONC. SLAB, REFER TO STRUCT.
17.	CONC. FOOTING, REFER TO STRUCT.
18.	NOT USED.
19.	1/2" PLYWOOD, PAINT PER FINISH SCHEDULE.
20.	3/4" EXT. PLYWOOD. REFER TO STRUCT. DWG'S.
21.	3" RIGID ROOF INSULATION, MIN. R-15 .
22.	TPO ROOF MEMBRANE.
23.	H.M. DOOR, PER DOOR SCHEDULE.
24.	2x WD. JOISTS, REFER TO STRUCT, DWG'S.
25.	NOT USED.
26.	CONC. PAVING, REFER TO CIVIL DWG'S.
27.	OVERHEAD SECTIONAL DOOR & TRACK, REFER TO DOOR SCHED.
28.	CONC. SIDEWALK, REFER TO CIVIL DWG'S.
29.	NOT USED.
30.	ROOF CRICKET. REFER TO ROOF PLAN.
31.	PREFINISHED MTL. SCUPPER, PAINT DARK BRONZE. REFER TO DETAIL 12/A7.00.
32.	PREFINISHED MTL. DOWNSPOUT AND LEADERHEAD W/ (3) STRAP ANCHORS PER D.S., PAINT DARK BRONZE.
33.	NOT USED.
34.	LANDSCAPE, REFER TO LANDSCAPE DWG'S.
35.	6"x2" CONC. CURB AT PERIMETER OF DEPRESSED SLAB. REFER TO STRUCT. DWG'S.

KEYNOTES

1. REFER TO EXTERIOR ELEVATIONS FOR COLORS & FINISHES.
2. WHERE NOT OTHERWISE ALREADY PROVIDED BY BLOCKING INCLUDED IN THE STRUCTURAL DESIGN OF THE EXTERIOR WALLS, BLOCKING BETWEEN STUDS AND OF SAME MATERIAL, IS TO BE INSTALLED SO THAT THERE IS NO CLEAR VERTICAL GAP GREATER THAN 10'.
3. EIFS TO BE DRAINABLE SYSTEM.

GENERAL NOTES

ALTAR GROUP

ARCHITECTURE
ENGINEERING

SEAL:

REGISTERED ARCHITECT
JOHND LINTON
21410
STATE OF TEXAS
02/21/25

CONSULTANT:

TAKE 5 OIL CHANGE
PROTOTYPE: 3 BAY
5331 WALZEM ROAD
SAN ANTONIO, TX 78218

REV	DATE	DESCRIPTION
1	11/26/24	ISSUE FOR PERMIT
2	02/21/25	RE-ISSUE FOR PERMIT

DRAWN BY: AH
CHECKED BY: JL
ARCH. PROJECT NO.: DB24-023
SHEET NAME: WALL SECTIONS
SHEET NUMBER: **A4.11**

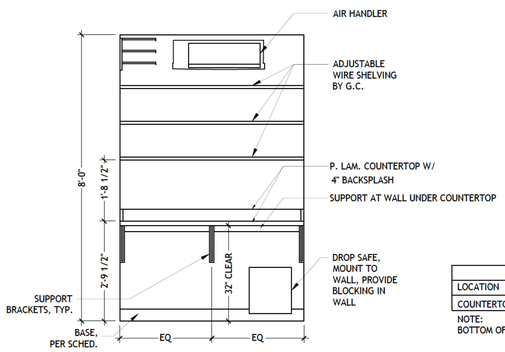

ELEV. D

PLASTIC LAMINATE SPECS			
LOCATION	MANUF.	NUMBER	NAME
COUNTERTOP	WILSONART	4595K-52	BAHIA GRANITE

NOTE:
BOTTOM OF COUNTERTOP TO BE MINIMUM 32" A.F.F.

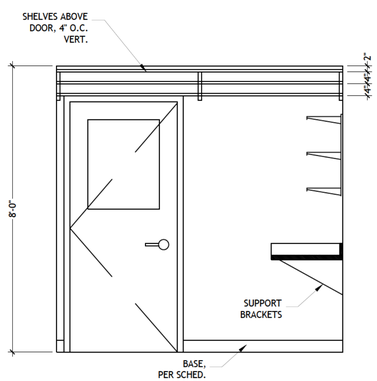

ELEV. A

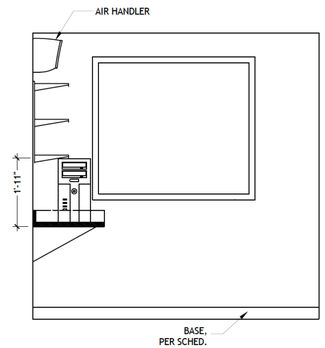

ELEV. C

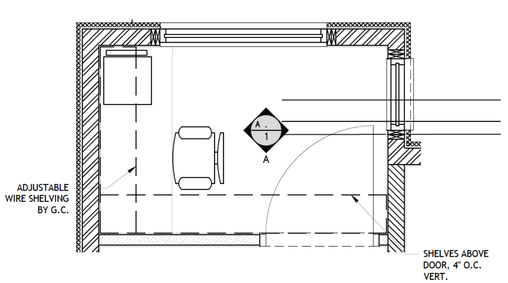

PLAN

ENLARGED OFFICE PLAN & ELEVATIONS | 1/2" = 1'-0" | 2

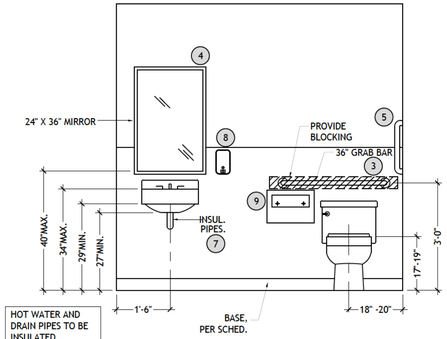

NOTE:
APPLY FRP AT ALL WALLS OF RESTROOM TO 48" A.F.F.

ELEV. A

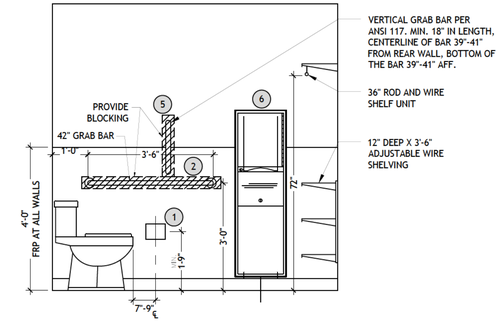

ELEV. D

GRAB BAR STRUCTURAL STRENGTH. ALLOWABLE STRESSES SHALL NOT BE EXCEEDED FOR MATERIALS USED WHEN A VERTICAL OR HORIZONTAL FORCE OF 250 POUNDS (1112 N) IS APPLIED AT ANY POINT ON THE GRAB BAR, FASTENER, MOUNTING DEVICE, OR SUPPORTING STRUCTURE.

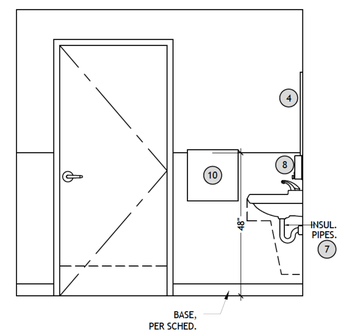

ELEV. B

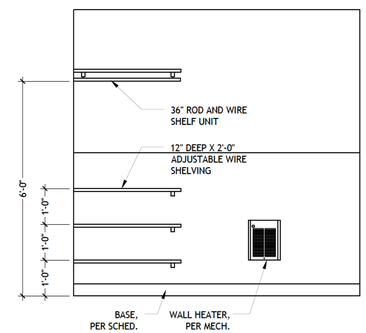

ELEV. C

TOILET ACCESSORIES SCHEDULE

MARK	DESCRIPTION	MANUF / MODEL NO.	MOUNTING HEIGHT
1	TOILET PAPER DISPENSER	BOBRICK B-2888	22" A.F.F. TO OPERABLE PARTS
2	42" GRAB BAR	BOBRICK B-5806x42	36" A.F.F. TO TOP
3	36" GRAB BAR	BOBRICK B-5806x36	36" A.F.F. TO TOP
4	24" x 36" MIRROR	BOBRICK B-165 2436	40" A.F.F. TO BOTTOM OF REFLECTIVE SURFACE
5	VERTICAL GRAB BAR	BOBRICK B-5806x18	SEE 3/A100
6	PAPER TOWEL DISPENSER AND WASTE RECEPTACLE	BOBRICK B-3944	48" A.F.F. TO OPERABLE PARTS
7	UNDER LAVATORY GUARD		LAVATORY SUPPLY & DRAIN PIPES
8	SOAP DISPENSER	BOBRICK B-2111	
9	SEAT COVER DISPENSER	BOBRICK B-221	
10	FIRST AID KIT		48" A.F.F. TO OPERABLE PARTS

NOTES:
1. ALL TOILET ACCESSORIES SHALL BE LOCATED AND MOUNTED TO MEET ALL REQUIREMENTS OF THE ADA AND ALL LOCAL ACCESSIBILITY CODE REQUIREMENTS. REFER TO DET. 2/A0.12 FOR MOUNTING HEIGHTS.
2. ALL TOILET ACCESSORIES SHALL BE BY BOBRICK OR EQUAL.
3. PROVIDE BLOCKING PER MANUFACTURER'S RECOMMENDATIONS AT ALL GRAB BARS AND WALL MOUNTED FIXTURES, REFER TO DET. 16/A7.00.
4. ALL BATHROOM ACCESSORIES ARE TO BE INSTALLED BY G.C.

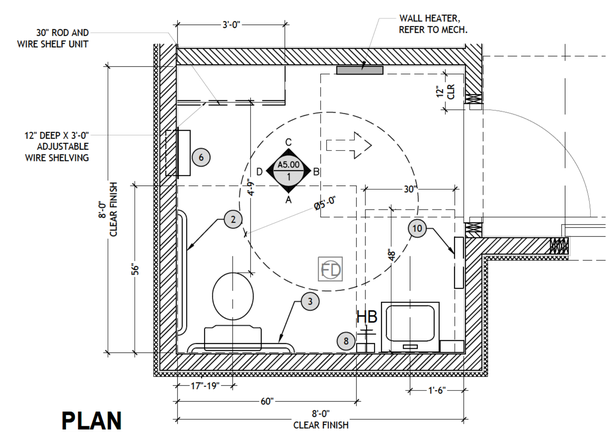

PLAN

ENLARGED RESTROOM PLAN & ELEVATIONS | 1/2" = 1'-0" | 1

ALTAR GROUP
ARCHITECTURE ENGINEERING

SEAL:

REGISTERED ARCHITECT JOHND LINTON 21410 STATE OF TEXAS
02/21/25

CONSULTANT:

TAKE 5 OIL CHANGE
PROTOTYPE: 3 BAY
5331 WALZEM ROAD
SAN ANTONIO, TX 78218

REV	DATE	DESCRIPTION
1	11/26/24	ISSUE FOR PERMIT
2	02/21/25	RE-ISSUE FOR PERMIT

DRAWN BY: RM
CHECKED BY: RR
ARCH. PROJECT NO.: DB24-023
SHEET NAME: ENLARGED PLANS & ELEVATIONS
SHEET NUMBER: A5.00

WINDOW TYPES

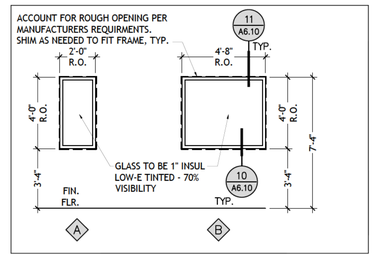

WINDOW SCHEDULE

A	2'-0" x 4'-0"	FIXED GLASS	DOUBLE PANE, LOW-E GLASS, TINTED	-	ALUM.	ANODIZED / DARK BRONZE EXT - PAINT GRAY INT	-	NOTE 4
B	4'-8" x 4'-0"	FIXED GLASS	DOUBLE PANE, LOW-E GLASS, TINTED	-	ALUM.	ANODIZED / DARK BRONZE EXT - PAINT GRAY INT	-	NOTE 4

DOOR TYPES

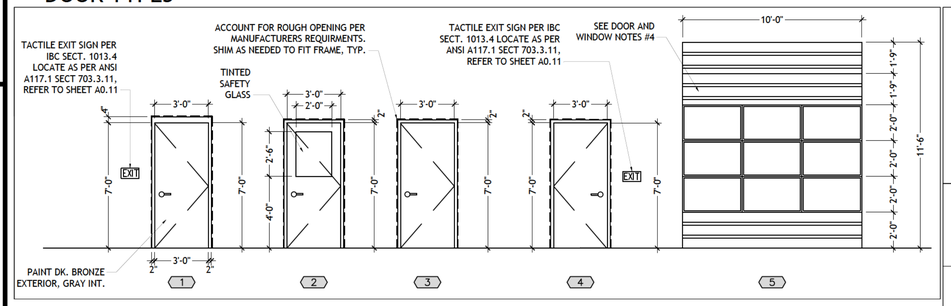

DOOR HARDWARE

SET 1	1 1/2 PAIR HINGES NRP MORTISED DEADBOLT AND LOCKSET COMBINED WITH THUMB TURN INSIDE AND KEYED OUTSIDE. ONE ACTION OPERATED BOTH BOLT AND LOCKSET CLOSER FULL WEATHERSTRIP SWEEP RAIN DRIP ON FRAME OVERHEAD THRESHOLD SILENCERS FLOOR STOP
SET 2	1 1/2 PAIR HINGES LOCKSET - KEYED OUTSIDE, PUSH BUTTON INSIDE CLOSER FLOOR STOP - COOR. LOCATION W/ AC UNIT SILENCERS
SET 3	1 1/2 PAIR HINGES LOCKSET - KEYED OUTSIDE, PUSH BUTTON INSIDE CLOSER WALL STOP SILENCERS TACTILE SIGN W/ INTERNATIONAL SYMBOL: MEN/WOMEN
SET 4	1 1/2 PAIR HINGES LOCKSET - PASSAGE 1 STOP - FLOOR MTD. CLOSER SILENCERS

NOTE: ALL FIN. HARDWARE TO BE ADA COMPLIANT

DOOR SCHEDULE

MARK	SIZE	DOOR TYPE	DOOR FINISH		FRAME	FRAME FINISH		THRESHOLD	JAMB	HEAD	HARDWARE	ELEV.	REMARKS	
1	3' x 7'	FLUSH H.M.	PAINT	DK BRONZE EXT GRAY INT	H.M.	PAINT	DK BRONZE EXT GRAY INT	5/A6.10	6/A6.10	7/A6.10	SET 1	1	CLOSER, LOCKSET, THRESHOLD.	NOTE 1,2,5
2	3' x 7'	FLUSH H.M.	PAINT	GRAY EXT GRAY INT	H.M.	PAINT	GRAY EXT GRAY INT	--	--	9/A6.10	SET 2	2	LOCKSET, HALF GLASS (TINTED), CLOSER	NOTE 1,2,4
3	3' x 7'	FLUSH H.M.	PAINT	GRAY EXT GRAY INT	H.M.	PAINT	GRAY EXT GRAY INT	--	--	9/A6.10	SET 3	3	LOCKSET, CLOSER.	NOTE 1,2,6
4	3' x 7'	FLUSH H.M.	PAINT	GRAY EXT GRAY INT	H.M.	PAINT	GRAY EXT GRAY INT	--	--	9/A6.10	SET 4	4	LOCKSET, CLOSER	NOTE 1,2
5	10' x 11'-6"	UPWARD ACTING	FACTORY FINISH CLOPAY "CHOCOLATE"		H.M.	FACTORY FINISH CLOPAY "CHOCOLATE"		1/A6.10	2/A6.10	2/A6.10	MFR	5	3 CENTER SECTIONS GLASS	NOTE 3,4

OVERHEAD DOOR VENDOR - CLOPAY, SEE SHEET A6.20a, NO SUBSTITUTIONS
CONTACT: DAWN KRIEGER, PROJECT MANAGER
CORNELL STOREFRONT SYSTEMS DBA CLOPAY NATIONAL ACCOUNTS
TAKE5@CLOPAY.COM, 800-526-4301 OPTION 5, 937-230-8505

ALTERNATE OVERHEAD DOOR CONTACT
OVERHEAD DOOR CORPORATION
CONTACT: TIMOTHY BAILEY
2501 S HWY 121 BUS
LEWISVILLE, TEXAS 75067
CELL: 469-452-0355
EMAIL: TIMOTHY_BAILEY@OVERHEADDOOR.COM

DOOR AND WINDOW NOTES
NOTE 1: HARDWARE TO BE LEVER ACTION AND MEET ALL ANSI 117.1 REQUIREMENTS
NOTE 2: HARDWARE TO BE COMMERCIAL GRADE
NOTE 3: HARDWARE PER MANUF. REQIREMENTS
NOTE 4: SAFETY GLAZING TO MEET ANSI Z97.1 CLASS A
NOTE 5: DARK BRONZE PAINT COLOR TO BE (SW 6076 "TURKISH COFFEE")
NOTE 6: EXTERIOR DOOR WHEN INDICATED ON PLAN 1/A-100
NOTE 7: G.C. TO FIELD MEASURE ALL DOOR & WINDOW ROUGH OPENINGS TO CONFIRM FRAME SIZES WILL FIT

DOOR & WINDOW SCHEDULES, TYPES AND HARDWARE NOTES --- 2

AREA	FLOOR	BASE	WALLS	CEILING	CLG. HT.	REMARKS		
SERVICE BAYS	CONC., SEALED	VINYL	1/2" PLYWD.	NONE	OPEN (13'-4" TRUSS HT)	SMOOTH FINISH. COLOR INTEGRAL	B-C PLYWD.	NOTE 1,2,3,4,5,8,9,10
MANAGER'S OFFICE	CONC., SEALED	VINYL	1/2" PLYWD.	1/2" PLYWD.	8'-0"	SMOOTH FINISH. COLOR INTEGRAL	B-C PLYWD.	NOTE 1,2,3,4,8,9,10
TOILET RM.	CONC., SEALED	VINYL	1/2" PLYWD.	1/2" PLYWD.	8'-0"	SMOOTH FINISH. COLOR INTEGRAL	B-C PLYWD.	NOTE 1,2,3,4,8,9,10,11
BACK ROOM	CONC., SEALED	VINYL	1/2" PLYWD.	1/2" PLYWD.	8'-0"	SMOOTH FINISH. COLOR INTEGRAL	B-C PLYWD.	NOTE 1,2,3,4,8,9,10
ATTIC	1/2" PLYWD.	N/A	1/2" PLYWD.	TRUSSES	OPEN	B-C PLYWD.		NOTE 1,2,3,4,10
WAITING ROOM	CONC., SEALED	VINYL	1/2" PLYWD.	1/2" PLYWD.	8'-0"	SMOOTH FINISH. COLOR INTEGRAL	B-C PLYWD.	NOTE 1,2,3,4,8,9,10

NOTE 1: PAINT EXPOSED WALL SURFACE (GWB OR PWD)

NOTE 2: PAINT EXPOSED CEILING

NOTE 3: ALL INTERIOR FINISHES ARE TO MEET TABLE 803.5 OF THE NCBC.

NOTE 4: INTERIOR PAINT COLOR TO BE SEMI GLOSS ENAMEL WHITE (SW 7006 "EXTRA WHITE") EXCEPT WHERE NOTED.

NOTE 5: G.C. TO POLISH FLOOR PRIOR TO BEAR SERVICES INSTALL.

NOTE 7: SEE STRUCTURAL DWGS FOR DEPRESSED SLAB DETAILS.

NOTE 8: BUTTERFIELD COLOR SELECT GRADE INTEGRAL CONCRETE COLORANT (SG01 CHINCHILLA BROWN) NOTE: *1 BAG PER YARD

NOTE 9: SEALER - H&C PRO SERIES SOLVENT BASED DECORATIVE CONC. SEALER (CLEAR)

NOTE 10: ALL INTERIOR TRIM TO BE "INDUSTRIAL GRAY" (SW 7017 "DORIAN GRAY")

NOTE 11: ALL INTERIOR WALL PAINT AT TOILET ROOM TO BE ACRYLIC WASHABLE SEMI-GLOSS ENAMEL PAINT

FINISH SCHEDULE --- 1

ALTAR GROUP
ARCHITECTURE ENGINEERING

SEAL:
REGISTERED ARCHITECT JOHND LINT OLIVER 21410 STATE OF TEXAS
02/21/25

CONSULTANT:

TAKE 5 OIL CHANGE
PROTOTYPE: 3 BAY
5331 WALZEM ROAD
SAN ANTONIO, TX 78218

REV	DATE	DESCRIPTION
1	11/26/24	ISSUE FOR PERMIT
2	02/21/25	RE-ISSUE FOR PERMIT

DRAWN BY: RM
CHECKED BY: RR
ARCH. PROJECT NO.: DB24-023
SHEET NAME: DOOR, WINDOW & FINISH SCHEDULES
SHEET NUMBER: A6.00

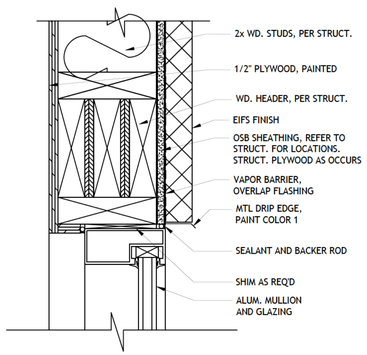

EXTERIOR WINDOW HEAD DETAIL 3" = 1'-0" **11**

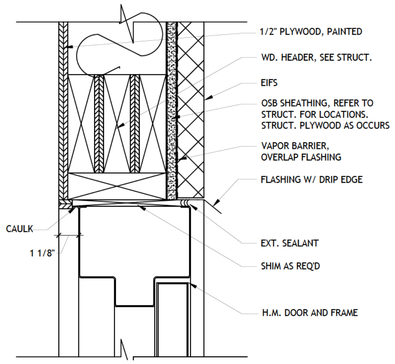

EXTERIOR DOOR HEAD DETAIL 3" = 1'-0" **7**

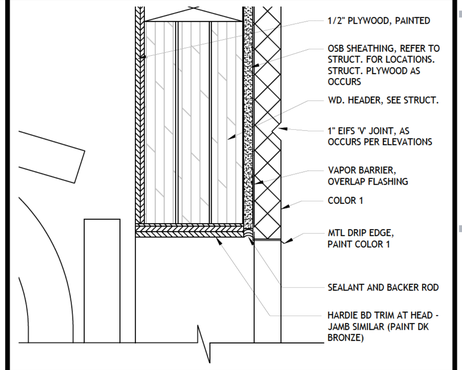

OVERHEAD HEAD DETAIL 3" = 1'-0" **3**

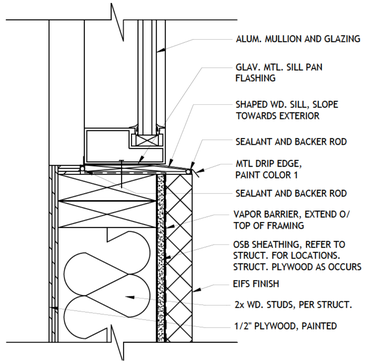

EXTERIOR WINDOW SILL DETAIL 3" = 1'-0" **10**

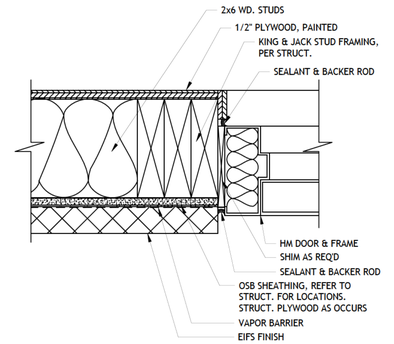

EXTERIOR DOOR JAMB DETAIL 3" = 1'-0" **6**

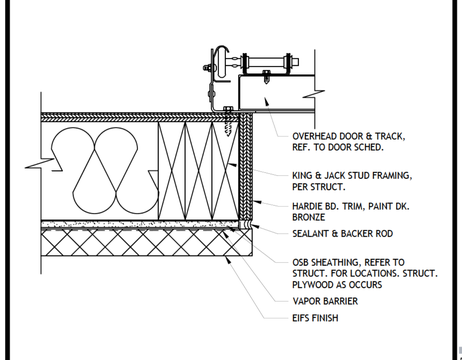

OVERHEAD JAMB DETAIL 3" = 1'-0" **2**

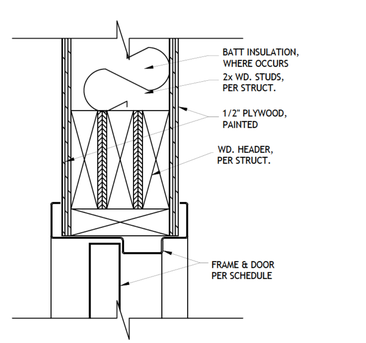

INTERIOR DOOR HEAD DETAIL 3" = 1'-0" **9**

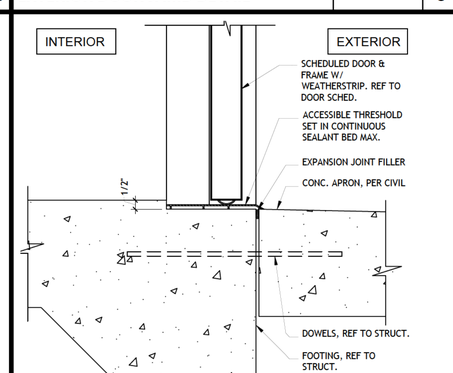

EXTERIOR DOOR SILL DETAIL 3" = 1'-0" **5**

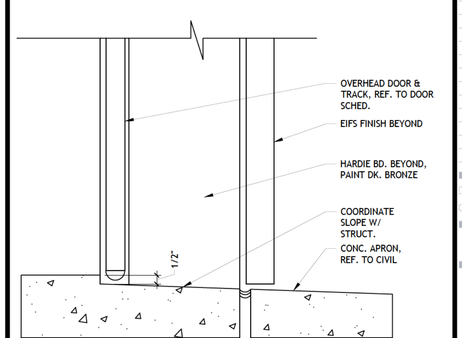

OVERHEAD SILL DETAIL 3" = 1'-0" **1**

ALTAR GROUP

ARCHITECTURE ENGINEERING

SEAL:

REGISTERED ARCHITECT JOHND LINTON 21410 STATE OF TEXAS

02/21/25

CONSULTANT:

TAKE 5 OIL CHANGE

PROTOTYPE: 3 BAY

5331 WALZEM ROAD
SAN ANTONIO, TX 78218

REV	DATE	DESCRIPTION
1	11/26/24	ISSUE FOR PERMIT
2	02/21/25	RE-ISSUE FOR PERMIT

DRAWN BY: RM

CHECKED BY: RR

ARCH. PROJECT NO.: DB24-023

SHEET NAME: DOOR & WINDOW DETAILS

SHEET NUMBER: **A6.10**

IBC 2003, IBC 2006, IBC 2009, Texas Department of Insurance**
Wind enforced areas

	Model	Cost Per 6 Door	Cost Per 8 Door	ASCE 7-05 EXP B	ASCE 7-05 EXP C
+13.5,-13.5 PSF	524 W1	NOTE 1		0-93 MPH	0-83 MPH
+20,-21 PSF	3208 W1	NOTE 1		93-116 MPH	84-104 MPH
+50,-56 PSF IMPACT	3728 W6	NOTE 1		117-190 MPH	105-170 MPH

NOTE 1: COST OF DOORS SET BY VENDOR AND TAKE 5

Wind Loading – Impact Glazing Requirements
IBC 2012, 2015, FBC, SC BC, Miami Dade County
ASCE 7-10: Over 140 mph or over 130 mph within 1 mile of coast
IBC 2003, IBC 2006, IBC 2009, Texas Department of Insurance
ASCE 7-05: Over 120 mph or over 110 mph within 1 mile of coast
****Pending respective product approvals**

DOOR CONFIGURATION						WEIGHT (LBS)
MODEL	DESIGN	TOP	GLAZING	INSUL	FINISH	
524	W1		TEMP18		CHOCLT	300

SPECIAL NOTE: THE DESIGN OF THE SUPPORTING STRUCTURAL ELEMENTS SHALL BE THE RESPONSIBILITY OF THE PROFESSIONAL OF RECORD FOR THE BUILDING OR STRUCTURE IN ACCORDANCE WITH CURRENT BUILDING CODES.

MODEL 524W1

SECTIONS ARE 2" NON-INSULATED 24GA. ROLL FORMED RIBBED STEEL CONSTRUCTION.

ACTUAL DOOR HEIGHT IS APPROX. 1" OVER BECAUSE OF JOINTS BETWEEN SECTION PLUS BOTTOM ASTRAGAL

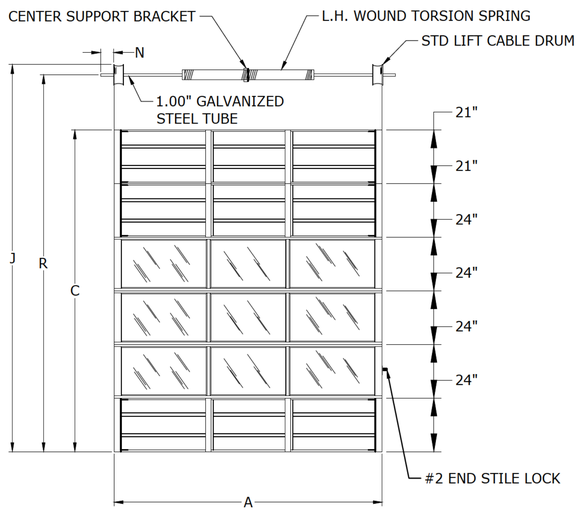

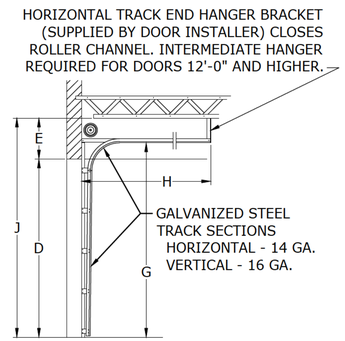

SIDE ELEVATION
STANDARD LIFT
TRACK DETAIL

NOTES:

1. (6) DOOR 10'-2" X 11'-6"
2. DOOR TO BE SUPPLIED WITH 10,000 CYCLE TORSION SPRINGS.
3. DOOR TO BE SUPPLIED WITH REVERSE ANGLE MOUNTED, 2" GALVANIZED STEEL TRACK WITH 15" RADIUS STANDARD LIFT.
4. DOOR TO HAVE ONE INTERIOR MOUNTED #2 END STILE SLIDE BOLT DOOR LOCK.
5. DOOR TO MEET OR EXCEED ± 13.5 PSF DESIGN WINDLOAD AND A ± 20 PSF TEST WINDLOAD REQUIREMENT.
6. DOOR REINFORCEMENT TO BE (1) 2 1/4" UBAR STRUT IN THE MIDDLE OF EVERY OTHER STEEL SECTION STARTING WITH THE BOTTOM SECTION.
7. DOOR TO HAVE (3) FULL VISION SECTIONS OF 1/8" TEMPERED GLASS LOCATED IN SECTIONS 2 THRU 4.
8. ALL FULL VISION SECTIONS TO BE CHOCOLATE BROWN.
9. FV SECTION REINFORCEMENT TO BE 1 1/4" X 1 1/4" X 1/8" ALUMINUM ANGLE, QTY ONE PER FV SECTION, LOCATED AT THE TOP OF EACH SECTION.
10. DOOR TO HAVE VINYL TOP WEATHER SEAL AND REVERSE ANGLE JAMB WEATHER SEAL.
11. DOOR TO HAVE STANDARD SECTION STACKING. DIMENSIONS GIVEN FOR CLARITY.

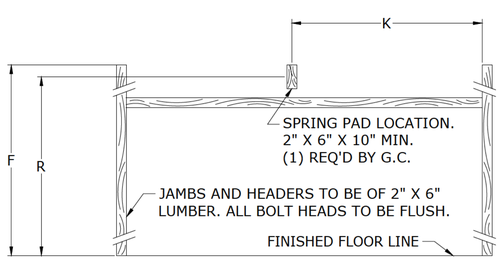

INSIDE WALL ELEVATION
OPENING PREPARATION

NOTE: REFER TO THE APPROVED WINDLOAD INSTALLATION DRAWING FOR JAMB CONNECTION DETAILS OR REFER TO DASMA TECHNICAL DATA SHEET #161 FOR DETAILS ON JAMB CONNECTION FASTENERS AND MOUNTING SCHEDULES.

Dawn Krieger
Project Manager
Cornell Storefront Systems
dba Clopay National Accounts
Take5@clopay.com
800-526-4301 Option 5
937-230-8505

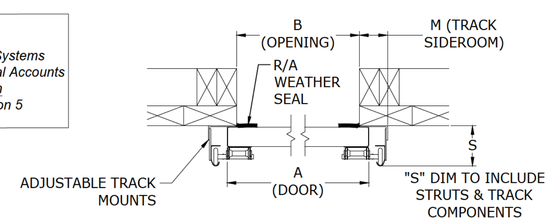

JAMB DETAILS

DIM.	DESCRIPTION	DIMENSIONS
A	DOOR WIDTH	10'-2"
B	OPENING WIDTH	10'-0"
C	DOOR HEIGHT	11'-6"
D	OPENING HEIGHT	11'-6"
	QUANTITY OF PANELS WIDE	3
	QUANTITY OF SECTIONS HIGH	6
E	HEADROOM (MIN.)	1'-3.5"
F	JAMB HEIGHT (MIN.)	12'-9.5"
G	OVERHEAD CLEARANCE	12'-1"
H	BACKROOM (MIN.)	13'-5"
J	FLOOR TO CEILING (MIN.)	12'-9.5"
K	SPRING PAD OFFSET 1	5'-0"
L	SPRING PAD OFFSET 2	
M	TRACK SIDEROOM	0'-4.5"
N	COUNTERBALANCE SIDEROOM	0'-4.5"
R	SHAFT CENTER LINE	12'-6.5"
S	TRACK BACKROOM	0'-5"

Clopay® Building Products Company

SHOP DRAWING

IMPORTANT: This document must be signed and returned prior to any fabrication. Please reference this drawing number on all correspondence. Thank you!

NOTICE: Confidential/Proprietary information of CLOPAY BUILDING PRODUCTS CO. is contained herein and may not be disclosed, used, duplicated, made available, or distributed without its prior consent. Failure to observe this notice may result in liability for any damages and losses resulting therefrom.

DRAWN BY: SQB	DATE: 11-28-17	APPROVAL SIGNATURE:	APPROVAL DATE:
CUSTOMER: TAKE 5 OIL CHANGE			
JOB: MASTER DRAWING 524W1		DRAWING NUMBER: 10036541-1-2	
CSR/DC:			SHEET: 1 OF 2

ALTAR GROUP
ARCHITECTURE ENGINEERING

SEAL:

REGISTERED ARCHITECT JOHND LINTON 21410 STATE OF TEXAS
02/21/25

CONSULTANT:

TAKE 5 OIL CHANGE
PROTOTYPE: 3 BAY
5331 WALZEM ROAD
SAN ANTONIO, TX 78218

REV	DATE	DESCRIPTION
1	11/26/24	ISSUE FOR PERMIT
2	02/21/25	RE-ISSUE FOR PERMIT

DRAWN BY:
CHECKED BY:
ARCH. PROJECT NO.: DB24-023
SHEET NAME: OVERHEAD SECTIONAL DOOR SHOP DRAWINGS
SHEET NUMBER: A6.20a

IBC 2003, IBC 2006, IBC 2009, Texas Department of Insurance**
Wind enforced areas

	Model	Cost Per 6 Door	Cost Per 8 Door	ASCE 7-05 EXP B	ASCE 7-05 EXP C
+13.5,-13.5 PSF	524 W1	NOTE 1		0-93 MPH	0-83 MPH
+20,-21 PSF	3208 W1	NOTE 1		93-116 MPH	84-104 MPH
+50,-56 PSF IMPACT	3728 W6	NOTE 1		117-190 MPH	105-170 MPH

NOTE 1: COST OF DOORS SET BY VENDOR AND TAKE 5

Wind Loading – Impact Glazing Requirements
IBC 2012, 2015, FBC, SC BC, Miami Dade County
ASCE 7-10: Over 140 mph or over 130 mph within 1 mile of coast
IBC 2003, IBC 2006, IBC 2009, Texas Department of Insurance
ASCE 7-05: Over 120 mph or over 110 mph within 1 mile of coast
****Pending respective product approvals**

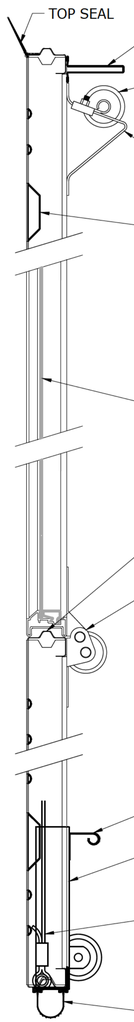

CENTER STILE OF 18 GA. GALV. STEEL FASTENED TO EXTERIOR SKIN WITH TOG-L-LOC JOINING SYSTEM

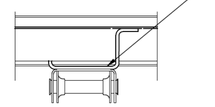

INTERMEDIATE HINGE DETAIL

END STILE OF 18 GA. HOT DIPPED GALVANIZED G-40 STEEL WITH NO OIL COATING, FASTENED TO EXTERIOR SKIN WITH TOG-L-LOC JOINING SYSTEM

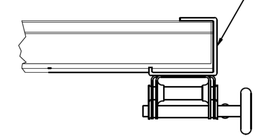

SINGLE END HINGE DETAIL

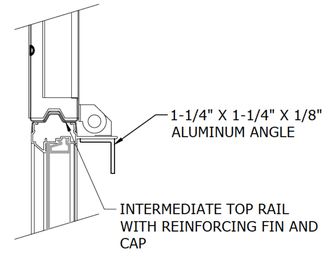

SECTION JOINT DETAIL

Dawn Krieger
Project Manager
Cornell Storefront Systems
dba Clopay National Accounts
Take5@clopay.com
800-526-4301 Option 5
937-230-8505

IMPORTANT: PLEASE REFERENCE THE DRAWING NUMBER ON ALL CORRESPONDENCE

Clopay® Building Products Company

SHOP DRAWING

IMPORTANT: This document must be signed and returned prior to any fabrication. Please reference this drawing number on all correspondence. Thank you!

NOTICE: Confidential/Proprietary information of CLOPAY BUILDING PRODUCTS CO. is contained herein and may not be disclosed, used, duplicated, made available, or distributed without its prior consent. Failure to observe this notice may result in liability for any damages and losses resulting therefrom.

DRAWN BY: SQB	DATE: 11-28-17	APPROVAL SIGNATURE:	APPROVAL DATE:
CUSTOMER: TAKE 5 OIL CHANGE			
JOB: MASTER DRAWING 524W1		DRAWING NUMBER: 10036541-1-2	
CSR/DC:			SHEET: 2 OF 2

ALTAR GROUP
ARCHITECTURE ENGINEERING

SEAL:

REGISTERED ARCHITECT JOHND LINTON 21410 STATE OF TEXAS
02/21/25

CONSULTANT:

TAKE 5 OIL CHANGE
PROTOTYPE: 3 BAY
5331 WALZEM ROAD
SAN ANTONIO, TX 78218

REV	DATE	DESCRIPTION
1	11/26/24	ISSUE FOR PERMIT
2	02/21/25	RE-ISSUE FOR PERMIT

DRAWN BY:
CHECKED BY:
ARCH. PROJECT NO.: DB24-023
SHEET NAME: OVERHEAD SECTIONAL DOOR SHOP DRAWINGS
SHEET NUMBER: **A6.20b**

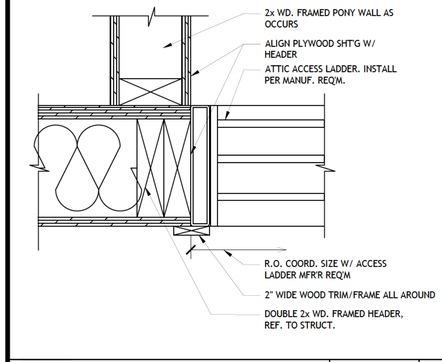

ATTIC ACCESS LADDER DETAIL | 3" = 1'-0" | **20**

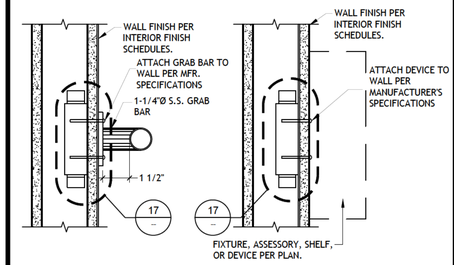

TYPICAL SUPPORT BLOCKING | 3" = 1'-0" | **16**

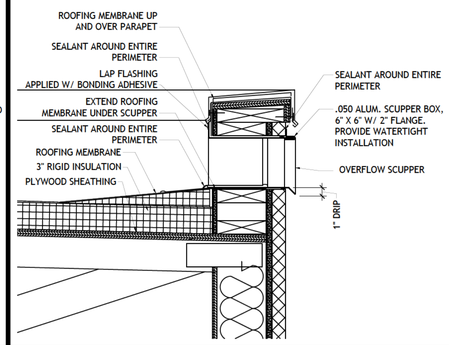

OVERFLOW SCUPPER DETAIL | 1 1/2" = 1'-0" | **12**

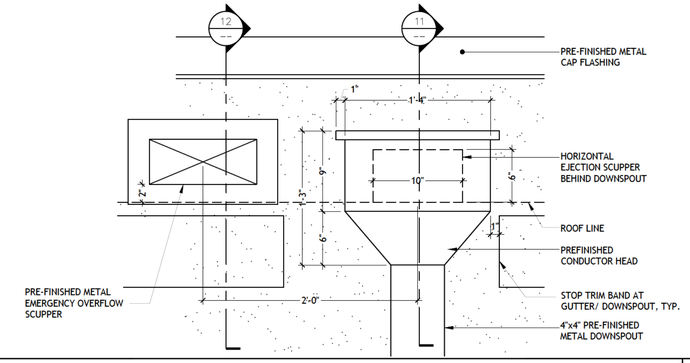

SCUPPER ELEVATION | 1 1/2" = 1'-0" | **4**

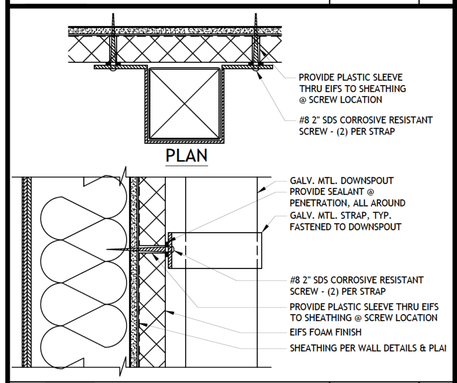

DOWNSPOUT STRAP DETAIL | 3" = 1'-0" | **19**

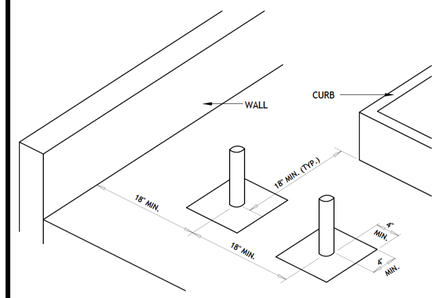

HOTES:
ALL PENETRATIONS SHALL BE LOCATED A MIN. 18" OUT OF VALLEY WATERWAYS, AS WELL AS A MIN. 18" FROM OTHER PENETRATIONS OR PROJECTIONS, SUCH AS P PES, WALLS, CURBS, ETC.

PENETRATION CLEARANCES | N.T.S. | **15**

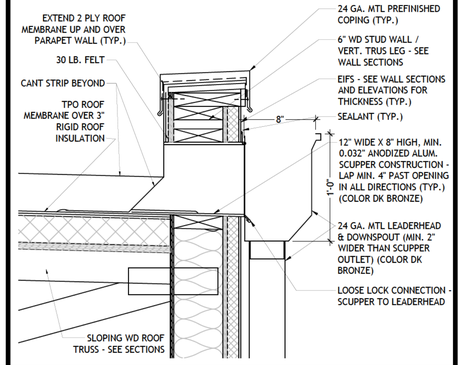

SCUPPER AND DOWNSPOUT DETAIL | 1 1/2" = 1'-0" | **11**

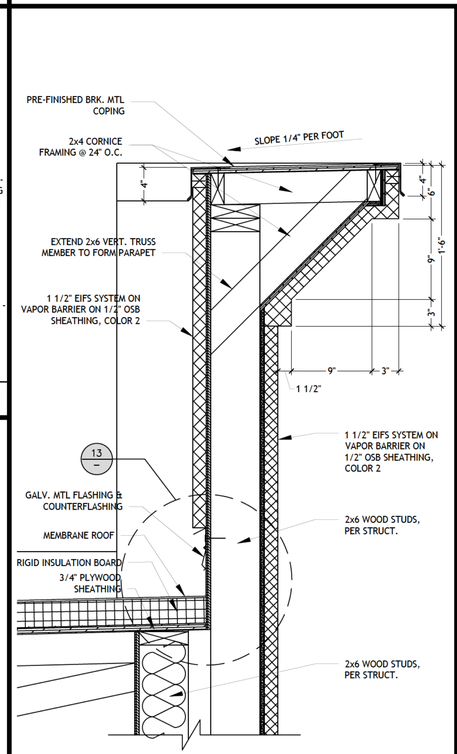

PARAPET TOWER DETAIL | 1 1/2" = 1'-0" | **6**

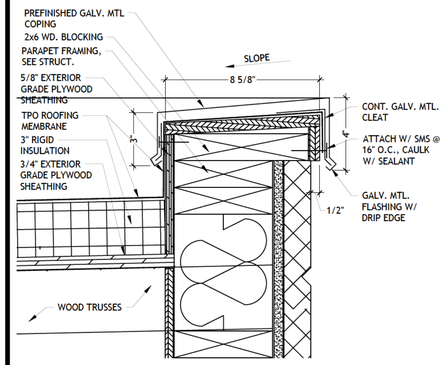

PARAPET COPING DETAIL | 1 1/2" = 1'-0" | **3**

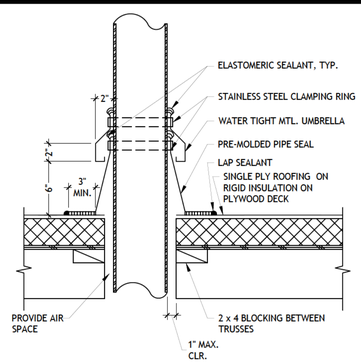

PIPE PENETRATION DETAIL | 1 1/2" = 1'-0" | **14**

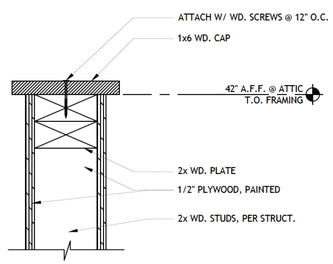

WOOD CAP DETAIL | 3" = 1'-0" | **10**

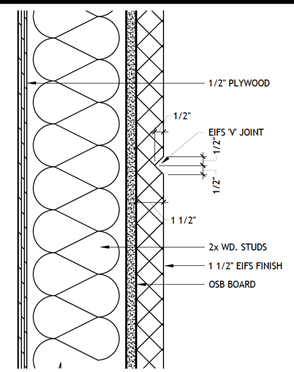

EIFS V-JOINT DETAIL | 3" = 1'-0" | **2**

NOT USED | 3" = 1'-0" | **18**

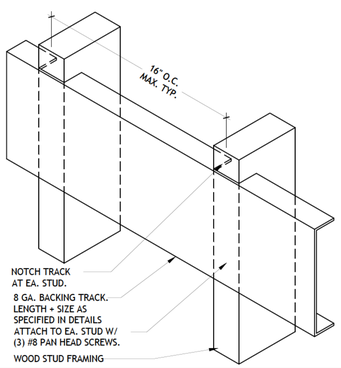

BLOCKING DETAIL | 3" = 1'-0" | **17**

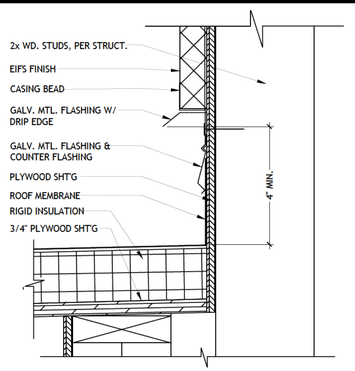

ROOF/ WALL FLASHING DETAIL | 3" = 1'-0" | **13**

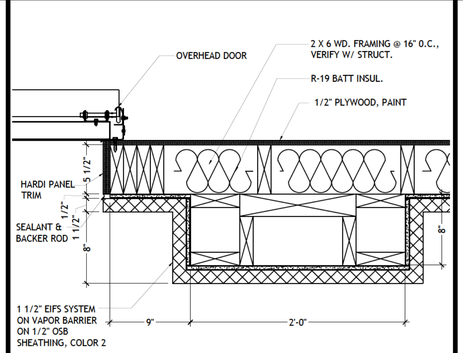

PIER DETAIL | 1 1/2" = 1'-0" | **9**

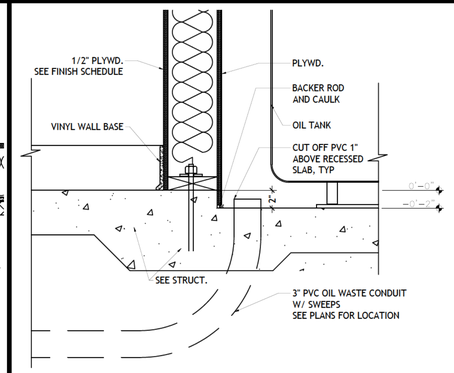

RECESSED SLAB AT TANKS DETAIL | 1 1/2" = 1'-0" | **5**

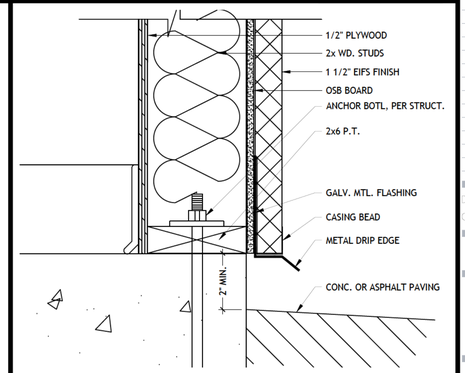

WALL BASE DETAIL | 3" = 1'-0" | **1**

ALTAR GROUP

ARCHITECTURE ENGINEERING

SEAL:

REGISTERED ARCHITECT JOHN D. LINT JR. 21410 STATE OF TEXAS

02/21/25

CONSULTANT:

TAKE 5 OIL CHANGE

PROTOTYPE: 3 BAY

5331 WALZEM ROAD
SAN ANTONIO, TX 78218

REV	DATE	DESCRIPTION
1	11/26/24	ISSUE FOR PERMIT
2	02/21/25	RE-ISSUE FOR PERMIT

DRAWN BY: RM
CHECKED BY: RR
ARCH. PROJECT NO.: DB24-023
SHEET NAME: MISC. DETAILS
SHEET NUMBER: **A7.00**

STRUCTURAL NOTES

A. GENERAL

1. THE STRUCTURE IS DESIGNED IN ACCORDANCE WITH THE 2021 INTERNATIONAL BU LD NG CODE WITH CITY OF SAN ANTONIO AMENDMENTS

2. THE DESIGN GRAVITY LOADS ARE AS FOLLOWS:

ROOF	20 PSF LL, 15 PSF DL
MEZZANINE FLOOR LOAD	125 PSF LL, 10 PSF DL

3A. THE STRUCTURES HAVE BEEN DESIGNED TO WITHSTAND THE W ND PRESSURES SPECIFIED IN CHAPTER 16, SECTION 1609, OF THE INTERNATIONAL BUILDING CODE, ASCE 7-16 ACCORD NG TO THE FOLLOWING INFORMATION:

DESIGN WIND SPEED (Vasd)	115 MPH
RISK CATEGORY	I I
WIND D RECTIONALITY FACTOR	0 85
MPORTANCE FACTOR	1 0
EXPOSURE CATEGORY	B
TOPOGRAPHIC FACTOR	1 0
GUST EFFECT FACTOR	0 85
ENCLOSURE CLASSIFICATION	ENCLOSED

4. HANDRA LS AND GUARDS SHALL BE DESIGNED N ACCORDANCE WITH TABLE 1607.1 OF THE INTERNATIONAL BUILDING CODE AS FOLLOWS:

A. HANDRAIL ASSEMBLES AND GUARDS SHALL BE DESIGNED TO SUPPORT A LATERAL LOAD OF 50 POUNDS PER L NEAR FOOT (PLF) APPLIED IN ANY D RECTION AT THE TOP AND TO TRANSFER THIS LOAD THROUGH THE SUPPORTS TO THE STRUCTURE.

B. NTERMEDIATE RAILS, BALUSTERS, AND PANEL F LLERS SHALL BE DESIGNED TO SUPPORT A HORIZONTALLY APPL ED NORMAL LOAD OF 50 PSF ON AN AREA NOT TO EXCEED ONE SQUARE FOOT INCLUD NG OPENINGS AND SPACE BETWEEN RAILS. REACTIONS DUE TO THIS LOAD NG ARE NOT REQU RED TO BE SUPER MPOSED WITH THOSE N NOTE (A) OR (C).

C. HANDRA L ASSEMBL ES AND GUARDS SHALL BE DESIGNED TO SUPPORT A LOAD OF 200 POUNDS APPL ED N ANY DIRECTION AT ANY PO NT ON THE RAIL. THESE LOADS NEED NOT BE ASSUMED TO ACT CUMULATIVELY WITH THOSE N NOTE (B) ABOVE.

5. STAIR TREADS AND STR NGERS SHALL BE DESIGNED FOR A UN FORM LOAD OF 100 PSF. NDIV DUAL STAIR TREADS SHALL ALSO BE DESIGNED TO SUPPORT A 300 LB. LOAD ON A 4 SQUARE INCH AREA N A POSITION THAT WILL CAUSE MAXIMUM STRESS.

6. EXCEPT FOR AREAS OF PUBLIC ASSEMBLY, AND EXCEPT FOR LIVE LOADS WHICH EXCEED 100 PSF, FLOOR LIVE LOADS ARE REDUCED FOR SLAB SYSTEMS, BEAMS, GIRDERS, COLUMNS, PIERS, WALLS, AND FOUNDATIONS WHICH SUPPORT A FLOOR AREA OF 150 SQ. FT. OR GREATER. THE FLOOR LIVE LOAD IS REDUCED AT THE RATE OF 0.08 PERCENT PER SQ. FT. OF FLOOR AREA SUPPORTED N EXCESS OF 150 SQ. FT. THE REDUCTION DOES NOT EXCEED 40 PERCENT FOR MEMBERS RECEIVING LOADS FROM ONE LEVEL ONLY, 60 PERCENT FOR OTHER MEMBERS, NOR "R" AS DETERM NED BY R= 23.1(1+DEAD LOAD/LIVE LOAD), N ACCORDANCE WITH SECTION 1607 OF THE BU LD NG CODE.

7. METHODS, PROCEDURES, AND SEQUENCES OF CONSTRUCTION ARE THE RESPONS B LITY OF THE CONTRACTOR. THE CONTRACTOR SHALL TAKE ALL NECESSARY PRECAUTIONS TO MAINTAIN AND NSURE THE NTEGRITY OF THE STRUCTURE AT ALL STAGES OF CONSTRUCTION.

8. THE STRUCTURE HAS BEEN DESIGNED FOR THE IN-SERVICE LOADS ONLY. THE METHODS, PROCEDURES, AND SEQUENCES OF CONSTRUCTION ARE THE RESPONSIB LITY OF THE CONTRACTOR. SUPPORTING FORMWORK FOR ELEVATED CONSTRUCTION SHALL NOT BE REMOVED BEFORE THE CONCRETE HAS GAINED SUFFIC ENT STRENGTH TO SAFELY STRESS THE TENDONS N BOTH DIRECTIONS AND THE STRUCTURE HAS GAINES SUFFICIENT STRENGTH STRENGTH TO SAFELY STRESS THE POST-TENSION NG TENDONS N BOTH DIRECTIONS AND THE STRUCTURE HAS TO SAFELY SUPPORT THE DEAD AND SUPER MPOSED LOADS WHICH WOULD BE SUBSEQUENTLY APPLIED.

9. SCALES NOTED ON THE DRAWINGS ARE FOR GENERAL REFERENCE ONLY. NO D MENSIONAL INFORMATION SHALL BE OBTAINED BY D RECT SCAL NG OF THE DRAWINGS.

10. ALL WORK SHALL BE IN ACCORDANCE WITH THE SPECIF ED BUILDING CODE AND ANY LOCAL REQU REMENTS OF THE BU LD NG DEPARTMENT OR JURISDICTION, AND OSHA STANDARDS.

11. STRUCTURAL DRAW NGS SHALL BE USED N CONJUNCTION WITH THE DRAWINGS AND SPECIFICATIONS OF ALL OTHER CONSULTANTS AND COORDINATED WITH THE WORK OF ALL TRADES.

12. CONSTRUCTION MEANS, METHODS, PROCEDURES, BRACING, AND SAFETY ARE THE SOLE RESPONSIBILITY OF THE GENERAL CONTRACTOR OR SUBCONTRACTOR. THE STRUCTURAL DRAWINGS REPRESENT THE COMPLETE STRUCTURAL SYSTEM N ITS FINISHED STATE.

13. ANY DISCREPANCIES N THE DRAWINGS OR DUE TO FIELD CONDITIONS WHICH AFFECT THE STRUCTURAL DESIGN OR THOSE OF OTHER CONSULTANTS MUST BE BROUGHT TO THE ATTENTION OF THE ENGINEER PRIOR TO PROCEEDING WITH CONSTRUCTION OF THAT PORTION OF THE PROJECT.

14. ANY CHANGE OR DEVIATION DURING CONSTRUCTION OF THE STRUCTURAL DRAWINGS, EVEN AT THE OWNER'S REQUEST, SHALL BE BROUGHT TO THE ATTENTION OF THE STRUCTURAL ENGINEER.

COMPONENT & CLADDING WIND PRESSURES FOR VERTICAL ELEMENTS (e.g. WINDOWS, DOORS, WALLS, FINISHES)

COMPONENT SIZE (SQ FT)	COMPONENT LOCATION	
	EDGE ZONE	INTERIOR ZONE
10 SF OR LESS	+ 17 PSF - 24 PSF	+ 17 PSF - 19 PSF
11 SF- 20 SF	+ 17 PSF - 22 PSF	+ 17 PSF - 18 PSF
21 SF- 50 SF	+ 15 PSF - 20 PSF	+ 15 PSF - 17 PSF
50 SF AND LARGER	+ 15 PSF - 18 PSF	+ 15 PSF - 16 PSF

COMPONENT & CLADDING WIND PRESSURES FOR HORIZONTAL ELEMENTS (e.g. ROOF COVERINGS, ETC)

COMPONENT SIZE (SQ FT)	COMPONENT LOCATION		
	INTERIOR ZONE	EDGE ZONE	CORNER ZONE
10 SF OR LESS	+ 10 PSF - 18 PSF	+ 10 PSF - 30 PSF	+ 10 PSF - 45 PSF
11 SF- 20 SF	+10 PSF - 17 PSF	+ 10 PSF - 26 PSF	+ 10 PSF - 37 PSF
21 SF- 50 SF	+ 10 PSF - 16 PSF	+ 10 PSF - 23 PSF	+ 10 PSF - 27 PSF
50 SF AND LARGER	+ 10 PSF - 16 PSF	+ 10 PSF - 19 PSF	+ 10 PSF - 19 PSF

NOTE: EDGE ZONE DISTANCE IS 10'-0" FROM BUILDING/ROOF EDGES

CONCRETE

1. CONCRETE IN THE FOLLOWING AREAS SHALL BE OF COMPRESSIVE STRENGTH (F'C) AT 28 DAYS AND CLASS LISTED BELOW. REFER TO CONCRETE SPECIFICATION FOR DEFINITION OF THE VARIOUS CLASSES OF CONCRETE.

SLAB ON GRADE AND GRADE BEAMS 3000 PSI W/C RATIO = 0.52

2. FLY ASH AND MAY BE USED AS A POZZOLAN TO REPLACE A PORTION OF THE PORTLAND CEMENT IN A CONCRETE MIX. FLY ASH SHALL BE TYPE C OR F AND CONFORM TO ASTM C618. THE RATIO OF THE AMOUNT OF FLY ASH TO THE TOTAL AMOUNT OF FLY ASH AND CEMENT IN THE MIX SHALL NOT EXCEED 20 PERCENT.

3. THE FIRE PROTECTION RATING FOR THIS PROJECT IS BASED UPON THE USE OF NORMAL WEIGHT AGGREGATE CONCRETE MADE WITH CARBONATE AGGREGATES. CARBONATE AGGREGATES CONSIST MAINLY OF CALCIUM OR MAGNESIUM CARBONATE, E.G., LIMESTONE OR DOLOMITE, AND CONTAIN 40 PERCENT OR LESS QUARTZ, CHERT AND FLINT.

4. MINIMUM CONCRETE COVER PROTECTION FOR REINFORCEMENT BARS SHALL BE AS FOLLOWS: (SEE ACI 318 SECTION 7.7 FOR CONDITIONS NOT NOTED)

CONCRETE EXPOSED TO WEATHER:	
#5 BARS AND SMALLER	1 - 1/2 INCHES
ALL OTHER BARS	2 INCHES
CONCRETE CAST AGAINST EARTH	3 INCHES
GRADE BEAMS:	
TOP	1 - 1/2 INCHES
BOARD FORMED SIDES	2 INCHES
EARTH FORMED SIDES	3 INCHES
BOTTOM	3 INCHES
SLABS ON GRADE:	
SINGLE LAYER OR TOP LAYER	2 INCHES
BOTTOM LAYER CAST AGAINST SOIL	3 INCHES
BOTTOM LAYER NOT CAST AGAINST SOIL	2 INCHES
COLUMNS	1 - 1/2 INCHES
PILASTERS & PLINTHS	2 INCHES
BEAMS	1 - 1/2 INCHES
WALLS BELOW GRADE (BACKFILLED SIDE)	2 INCHES
WALLS BELOW GRADE (NO BACKFILL)	3/4 INCHES

PROVIDE STANDARD BAR CHAIRS AND SPACERS AS REQUIRED TO MAINTAIN CONCRETE PROTECTION SPECIFIED.

5. CONCRETE REINFORCEMENT BARS SHALL CONFORM TO ASTM 615, GRADE 60 FOR #4 BARS AND LARGER. ALL OTHER REINFORCEMENT MAY CONFORM TO GRADE 40.

6. WELDED WIRE FABRIC SHALL CONFORM TO ASTM A185. FABRIC SHALL BE SUPPLIED IN FLAT SHEETS. FABRIC SHALL BE LAPPED TWO MESH AT SPLICES.

7. HIGH STRENGTH WIRE STRAND REINFORCEMENT FOR PRESTRESSED CONCRETE MEMBERS SHALL CONSIST OF WIRE CONFORMING TO ASTM A416, GRADE 270K.

8. REINFORCEMENT BARS SHALL NOT BE TACK WELDED, WELDED, HEATED, OR CUT UNLESS INDICATED ON THE CONTRACT DOCUMENTS OR REVIEWED BY THE STRUCTURAL ENGINEER.

9. WELDING OF REINFORCEMENT BARS, WHEN ACCEPTED BY THE STRUCTURAL ENGINEER, SHALL CONFORM TO THE AMERICAN WELDING SOCIETY STANDARD D1.4. ELECTRODES FOR SHOP AND FIELD WELDING OF REINFORCEMENT BARS SHALL CONFORM TO ASTM A233, CLASS E90XX.

10. REINFORCEMENT DESIGNATED AS "CONTINUOUS" MAY BE SPLICED USING TYPE "B" SPLICES. REINFORCEMENT BAR SPLICE LENGTHS IN BEAMS WHICH ARE LOCATED AT THE CENTERLINE OF SUPPORTS FOR BOTTOM BARS AND AT MIDSPAN FOR TOP BARS MAY BE 36 BAR DIAMETERS, UNLESS NOTED OTHERWISE. PROVIDE STANDARD ACI HOOKS FOR TOP AND BOTTOM BARS AT DISCONTINUOUS ENDS OF ALL GRADE BEAMS.

11. HORIZONTAL FOOTING AND HORIZONTAL WALL REINFORCEMENT SHALL BE CONTINUOUS AND SHALL HAVE 90-DEGREE BENDS AND EXTENSIONS, OR CORNER BARS OF EQUIVALENT SIZE LAPPED 36 BAR DIAMETERS, AT CORNERS AND INTERSECTIONS.

12. HORIZONTAL JOINTS WILL NOT BE PERMITTED IN CONCRETE CONSTRUCTION EXCEPT AS SHOWN ON THE CONTRACT DOCUMENTS. VERTICAL JOINTS MAY OCCUR AT CENTER OF SPANS AT LOCATIONS REVIEWED BY STRUCTURAL ENGINEER .

13. CONSTRUCTION JOINTS BETWEEN PIERS AND PIER CAPS, FOOTINGS AND WALLS OR COLUMNS, OR WALLS, COLUMNS, BEAMS, AND THE FLOOR SYSTEM THEY SUPPORT SHALL BE PREPARED BY ROUGHENING THE CONTACT SURFACE TO A FULL AMPLITUDE OF APPROXIMATELY 1/4 INCH LEAVING THE CONTACT SURFACE CLEAN AND FREE OF LAITANCE.

14. PROVIDE 1- NO. 4 REINFORCEMENT BAR X 4'-0" AT RE-ENTRANT CORNERS AND AROUND RECTANGULAR HOLES IN SLABS UNLESS NOTED OTHERWISE. PLACE BAR DIAGONAL TO CORNER WITH 1" CLEARANCE FROM THE TOP AND THE SIDE OF THE SLAB AT THE CORNER.

15. PROVIDE 2- NO. 4 REINFORCEMENT BARS X 4'-0" AT RE-ENTRANT CORNERS OF SLAB ON GRADE AT POUR STRIPS AND COLUMN BLOCKOUTS. PLACE BARS CENTERED IN THE SLAB AND DIAGONAL TO THE CORNER WITH 1" CLEARANCE FROM THE SLAB AT THE CORNER.

16. CONDUIT, PIPES, AND SLEEVES EMBEDDED IN CONCRETE SHALL CONFORM TO THE REQUIREMENTS OF ACI 318, CHAPTER 6.3.

LAP SPLICE SCHEDULE

REINF. SIZE	CONCRETE STRENGTH (PSI)		
	3000	4000	5000
#3	17"	15"	13"
#4	22"	19"	17"
#5	28"	24"	22"
#6	33"	29"	26"
#7	48"	42"	38"
#8	55"	48"	43"
#9	62"	54"	48"
#10	70"	61"	54"
#11	78"	67"	60"

REINFORCING STEEL SPLICE NOTES:

ALL REINFORCING STEEL SHALL BE SPLICED AS NOTED BELOW AND AS REQUIRED IN THE A.C.I. BU LD NG CODE (LATEST EDITION).

A. LAP SPLICE SCHEDULE SHALL BE USED FOR ALL LAP SPLICES UNLESS NOTED OTHERWISE.
B. ALL REINFORCING STEEL MARKED "CONT NUOUS" SHALL BE LAPPED WITH A LAP SPLICE IN ACCORDANCE WITH THE SCHEDULE.
C. MATCH BARS AROUND CORNERS INTERSECTIONS WITH A STANDARD 90 DEGREE HOOK. EACH LEG OF HOOK SHALL BE THE MIN MUM LENGTH OF THE LAP SPLICE SHOWN.
D. SPLICE TOP BARS AT CENTER OF SPAN, SPLICE BOTTOM BARS AT SUPPORTS.
E. NCREASE DEVELOPMENT LENGTH SHOWN IN SCHEDULE BY 1 50 FOR EPOXY COATED BARS.

FOUNDATION AND CONVENTIONAL SLAB ON GRADE

1. FOUNDATION DESIGNS ARE BASED ON GEOTECHNICAL REPORT NO. #0312-3316 DATED OCTOBER 4, 2024 BY INTERTEK PSI AND ALL APPLICABLE ADDENDA AND SUPPLEMENTS.

2. FOUNDATION DESIGNS ARE DESIGNED FOR THE FOLLOWING CRITERIA:
NET ALLOWABLE BEARING PRESSURE FOR SHALLOW FOUNDATIONS ON PREPARED SOIL= 2,500 PSF FOR TOTAL LOAD, PVR = 1.0" MAX.

3. EXCAVATIONS FOR SPREAD FOOTINGS, COMBINED FOOTINGS, CONTINUOUS FOOTINGS AND/OR MAT FOUNDATIONS SHALL BE CLEANED AND HAND TAMPED TO A UNIFORM SURFACE. FOOTING EXCAVATIONS SHALL HAVE CONCRETE PLACED WITHIIN 24 HOURS OF THE EXCAVATION OF THE FOOTING.

4. GENERAL CONTRACTOR SHALL NOTIFY THE ARCHITECT AND STRUCTURAL ENGINEER A MINIMUM OF 24 HOURS PRIOR TO PLACEMENT OF CONCRETE.

5. DURING CONSTRUCTION, THE CONTRACTOR SHALL PROVIDE TEMPORARY SHORING OF WALLS WHICH ARE SUPPORTED TOP AND BOTTOM. SUCH SHORING SHALL NOT BE REMOVED UNTIL THE SUPPORTING ELEMENTS ARE IN PLACE, THE CONCRETE HAS ATTAINED THE SPECIFIED 28 DAY COMPRESSIVE STRENGTH.

6. SUBGRADE UNDER SLABS ON FILL SHALL HAVE A MAXIMUM PLASTICITY INDEX OF 22 AND SHALL BE PREPARED, PLACED, AND COMPACTED IN ACCORDANCE WITH THE RECOMMENDATIONS CONTAINED IN THE GEOTECHNICAL REPORT

7. THE FLOOR SUBGRADE SHALL BE PROPERLY COMPACTED AND PROOFROLLED AND SHALL BE FREE OF STANDING WATER, MUD, AND FROZEN SOIL.

8. A 10 MIL (MIN.) VAPOR RETARDER SHALL BE PLACED BENEATH ALL SLAB ON GRADE LOCATIONS WHERE INDICATED IN THE STRUCTURAL DRAWINGS.

9. REFER TO CIVIL DRAWINGS FOR REQUIREMENTS AT ALL PAVING AREAS. SUBGRADE SHALL BE PREPARED IN ACCORDANCE WITH GEOTECHNICAL REPORT AND RECOMMENDATIONS.

10. THE STRUCTURAL AND GEOTECHNICAL ENGINEER SHALL BE NOTIFIED IMMEDIATELY IF QUESTIONABLE SOIL IS ENCOUNTERED OR IF FOUNDATION CONDITIONS OUTSIDE THE INTENT OF THE STRUCTURAL DESIGN AND DETAIL OCCURS.

11. THE OWNER SHALL MAINTAIN POSITIVE DRAINAGE AWAY FROM THE BUILDING FOR THE LIFE OF THE STRUCTURE. STANDING WATER ADJACENT TO THE BUILDING FOUNDATION IS NOT ACCEPTABLE AT ANY TIME. LANDSCAPING UPDATES AND IRRIGATION SYSTEMS MUST BE MONITORED ON A REGUALR BASIS TO INSURE THIS REQUIREMENT IS BEING MAINTAINED.

12. UNLESS NOTED OTHERWISE ON PLAN, CONTROL JOINTS TO BE LOCATED AT APPROXIMATELY 400 SQ. FT. GRIDS. CONTROL JOINT SHALL BE 1/8" TO 1/4" WIDE AND THE DEPTH SHALL BE 25% OF THE SLABS THICKNESS. CONTROL JOINT TO BE ZIP STRIP OR EQUAL. ACTUAL LOCATION TO BE DETERMINED BY OWNER OR CONTRACTOR AND SHALL BE SUBMITTED BY THE CONTRACTOR.

STATEMENT OF SPECIAL INSPECTION

WHEN INDICATED WITH A ' ✓' THE FOLLOWING SHALL BE INSPECTED IN ACCORDANCE WITH IBC SECTION 1704 BY A CERTIFIED SPECIAL INSPECTOR FROM AN ESTABLISHED TESTING AGENCY. ALL INSPECTION SHALL BE CONTINUOUS UNLESS OTHERWISE NOTED. FOR MATERIAL SAMPLING AND TESTING REQUIREMENTS, REFER TO MATERIAL SAMPLING AND TESTING SECTION BELOW. THE TESTING AGENCY SHALL SEND COPIES OF ALL STRUCTURAL TESTING AND INSPECTION REPORTS TO THE STRUCTURAL ENGINEER, ARCHITECT, CONTRACTOR, OWNER AND BUILDING DEPARTMENT (IF REQUIRED). ANY DISCREPANCIES SHALL BE BROUGHT TO THE ATTENTION OF THE CONTRACTOR FOR CORRECTION, THEN IF LEFT UNCORRECTED TO THE STRUCTURAL ENGINEER, ARCHITECT AND BUILDING DEPARTMENT (IF REQUIRED).

ITEM	REQUIRED	
GRADING, EXCAVATIONS, FILL,	✓	
CONCRETE - BATCH PLANT INSPECTION		
CONCRETE - CONCRETE PLACEMENT		
CONCRETE - REBAR/PT PLACEMENT	✓	
CONCRETE- POST TENSION STRESSING		
CONCRETE - ANCHOR BOLTS AND PLATES	✓	
CONCRETE - EXPANSION ANCHORS	✓	
CONCRETE - EPOXY ANCHORS	✓	
STRUCTURAL METAL FRAMING - MEMBER SIZES, INSTALLATION, AND CONNECTIONS	✓	
SHEARWALLS AND HOLDDOWNS - MEMBERS, FASTENING PATTERNS, AND CONNECTIONS		
MASONRY WALLS - PLACEMENT, REBAR, GROUTING		

UPON COMPLETION OF THE JOB, THE TESTING LABORATORY PROVIDING SERVICES SHALL FURNISH TO THE OWNER, ARCHITECT, AND ENGINEER OF RECORD, A STATEMENT SIGNED BY A LICENSED PROFESSIONAL ENGINEER THAT, TO THE BEST OF THEIR KNOWLEDGE, ALL REQUIRED TESTS AND INSPECTIONS WERE MADE IN ACCORDANCE WITH THE REQUIREMENTS OF THE CONTRACT DOCUMENTS.

MATERIAL SAMPLING AND TESTING

THE FOLLOWING SHALL BE SAMPLED AND TESTED BY A CERTIFIED INSPECTOR FROM AN WHEN INDICATION WITH A ' ' ESTABLISHED TESTING AGENCY IN ACCORDANCE WITH THE PROJECT SPECIFICATIONS, GENERAL NOTES OR PREVAILING BUILDING CODE, WHICH EVER IS MORE STRINGENT. ALL MATERIAL SAMPLING AND TESTING SHALL BE PERFORMED IN ACCORDANCE WITH ASTM REQUIREMENTS. FOR ADDITIONAL INFORMATION ON MATERIAL SAMPLING AND TESTING, REFER TO PROJECT SPECIFICATIONS AND GENERAL NOTES. THE TESTING AGENCY SHALL SEND COPIES OF ALL STRUCTURAL TESTING REPORTS DIRECTLY TO THE STRUCTURAL ENGINEER, ARCHITECT, CONTRACTOR, OWNER AND BUILDING DEPARTMENT (IF REQUIRED). ANY MATERIALS WHICH FAIL TO MEET THE PROJECT SPECIFICATIONS SHALL BE IMMEDIATELY BE BROUGHT TO THE ATTENTION OF THE STRUCTURAL ENGINEER.

ITEM	REQUIRED	
CONCRETE - REINFORCING	✓	MILL CERTIFICATES
CONCRETE - CYLINDERS	✓	AS REQUIRED PER SPECIFICATIONS
POST-TENSIONING TENDONS		(2) 5 FT. SAMPLES PER REEL. ONE FROM EACH END
EXPANSION ANCHOR INSTALLATION	✓	COORDINATE WITH ENGINEER ON FREQUENCY OF TESTING
EPOXY ANCHOR INSTALLATION	✓	COORDINATE WITH ENGINEER ON FREQUENCY OF TESTING

DEFERRED SUBMITTAL ITEMS:
THE FOLLOWING ITEMS WILL BE DEFERRED SUBMITTALS IN ACCORDANCE WITH IBC SECTION 106.3.4.2 AND LOCAL BLDG. DEPARTMENT REQUIREMENTS. ALL DEFERRED ITEMS SHALL BE SIGNED AND SEALED AND SUBMITTED TO THE ENGINEER OF RECORD AND THE BUILDING DEPARTMENT FOR REVIEW PRIOR TO INSTALLATION. REFER TO CITY AMENDMENTS FOR ANY ADDITIONAL REQUIREMENTS.
1. PRE-ENGINEERED WOOD TRUSSES

ALTAR GROUP

ARCHITECTURE
ENGINEERING

SEAL:

STATE OF TEXAS
GERALD T. WYNNE
94081
LICENSED
PROFESSIONAL ENGINEER
11·26·24

CONSULTANT:

Gerald T. Wynne, P.E.
Consulting Structural Engineer
16167 Kensington Drive, Suite 278
Sugar Land, TX 77479
Phone : 832.334.3260
Texas Firm #26169

TAKE 5 OIL CHANGE
PROTOTYPE:3 BAY
5331 WALZEM ROAD
SAN ANTONIO, TX 78218

REV	DATE	DESCRIPTION
	11/26/24	ISSUE FOR PERMIT
	02/21/25	RE-ISSUE FOR PERMIT

DRAWN BY: GW
CHECKED BY: GW
GTW PROJECT NO.: 24128
SHEET NAME: GENERAL NOTES & SPECIFICATIONS
SHEET NUMBER: S010

WOOD FASTENING SCHEDULE

CONNECTION	FASTENING	LOCATION
JOIST TO SILL OR GIRDER	3- 8d COMMON (2 1/2" X 0.131")	TOENAIL
BRIDGING TO JOIST	2- 8d COMMON (2 1/2" X 0.131")	TOENAIL EACH END
SOLE PLATE TO JOIST OR BLOCKING	3 1/4" X 0.148" NA LS @ 12" O.C.	TYPICAL FACE NAIL
SOLE PLATE TO JOIST OR BLOCKING AT BRACED WALL PANELS	SEE SHEAR WALL SCHEDULE	BRACED WALL PANELS
TOP PLATE TO STUD	2- 16d COMMON (3 1/2" X 0.162") 3- 3" X 0.131" NAIL	END NAIL
STUD TO SOLE PLATE	4-8d COMMON (2 1/2" X 0.131") 4- 3" X 0.131" NAIL	TOENAIL
	2- 16d COMMON (3 1/2" X 0.162") 3- 3" X 0.131" NAIL	END NAIL
DOUBLE STUDS	3" X 0.131" NAIL @ 8" O.C.	FACE NAIL
DOUBLE TOP PLATES	3" X 0.131" NAIL @ 12"O.C.	TYPICAL FACE NAIL
	8- 16d COMMON (3 1/2" X 0.162") 12- 3" X 0.131" NAILS	LAP SPLICE
TOP PLATE, LAPS AND INTERSECTIONS	2- 16d COMMON (3 1/2" X 0.162") 3- 3" X 0.131" NAIL	FACE NAIL
CONTINUOUS HEADER, TWO PIECES	16d COMMON (3 1/2" X 0.162")	16" O.C. ALONG EDGE
CONTINUOUS HEADER TO STUD	4- 8d COMMON (2 1/2" X 0.131")	TOENA L
RAFTER TO PLATE	3- 8d COMMON (2 1/2" X 0.131") 3- 3" X 0.131" NAIL	TOENA L
BUILT-UP CORNER STUD	16d (3 1/2" X 0.162") AT 24" O.C. 3" X 0.131" NAIL @ 16" O.C.	FACE NAIL
BUILT-UP GIRDER AND BEAMS	20d COMMON (4" X 0.192") AT 32" O.C. 3" X 0.131" NAIL @ 24" O.C.	FACE NAIL @ TOP AND BOTTOM STAGGERED ON OPPOSITE S DES
	2- 20d (4" X 0.192") COMMON 3- 3" X 0.131" NAIL	FACE NAIL @ ENDS AND AT EACH SPLICE

NOTE: FASTENERS AND CONNECTIONS SHOWN IN THE SCHEDULE ABOVE SHALL BE THE MINIMUM REQURIED UNLESS SUPERCEDED ELSEWHERE IN THESE DRAWINGS.

NOTE: THE TABLE SHOWN ABOVE IS DERIVED FROM IBC TABLE 2304.9.1

WOOD FRAMING SPECIFICATIONS:

1. ALL LUMBER AND SHEATHING SHALL BE MARKED WITH THE SPECIES, GRADE, AND GRADING AGENCY IN ACCORDANCE WITH THE BUILDING CODE .
2. THE SPECIES AND MINIMUM GRADE FOR THE FRAMING MEMBERS SHALL BE AS FOLLOWS,:(U.N.O. ELSEWHERE IN THE STRUCTURAL DRAWINGS)

MEMBER	SPECIES	GRADE
STUDS	SPF, DFL, SYP	#2
WALL PLATES	SYP	#3
HEADERS	SYP	#2
BEAMS	SYP	#2
POSTS	SYP	#2

3. FINGER JOINTED STUDS ARE ACCEPTABLE IN LIEU OF SOLID SAWN MEMBERS PROVIDED THEY ARE THE SAME SPECIES AND GRADE. FINGER JOINTED STUDS SHALL BE LATERALLY BRACED IN THE WEAK AXIS DURING CONSTRUCTION UNTIL WALL SHEATHING HAS BEEN INSTALLED ON AT LEAST ONE FACE.
4. LVL MEMBERS SPECIFIED SHALL HAVE THE FOLLOWING MINIMUM PROPERTIES: Fb=2600PSI, E=1,900,000 PSI, Fv=285 PSI. MULTIPLE PLIES SHALL BE FASTEN TOGETHER IN ACCORDANCE WITH MANUFACTURER'S RECOMMENDATIONS TO FUNCTION AS A SINGLE MEMBER. SOLID PSL MEMBERS MEETING THE DESIGN VALUES LISTED MAY BE SUBSTITUTED FOR THE LVL MEMBERS PROVIDED THEY ARE THE SAME OVERALL SIZE. LSL MEMBERS ARE NOT AN ACCEPTABLE SUBSTITUTION.
5. GLU-LAM (GL) MEMBERS SHALL BE FABRICATED USING SYP OR DFL MEMBERS AND SHALL BE OF THE FOLLOWING GRADES:

USE	GRADE COMBINATION
SIMPLE SPAN	24F-V4 (DFL) OR 24F-V3 (SYP)
CONT. BEAM	24F-V8 (DFL) OR 24F-V5 (SYP)
CANTILEVER	24F-V8 (DFL) OR 24F-V5 (SYP)

ALL GLU-LAM BEAMS SHALL BE FABRICATED WITH STANDARD CAMBER. GLU-LAM BEAMS MUST BE PROPERLY INSTALLED ACCORDING TO MARKINGS ON THE BEAM MEMBER.

6. ALL LUMBER IN CONTACT WITH CONCRETE OR EXPOSED TO WEATHER SHALL BE PRESSURE TREATED IN ACCORDANCE WITH THE AMERICAN WOOD PRESERVER'S ASSOCIATION. ALL FASTENERS INSTALLED OR IN CONTACT WITH PRESSURE TREATED LUMBER SHALL BE FINISHED OR COATED IN ACCORDANCE WITH MANUFACTURER'S RECOMMENDATIONS.
7. ROOF SHEATHING SHALL BE WOOD STRUCTURAL PANELS (WSP), 19/32" THICK, 40/20 SPAN RATING APA RATED SHEATHING.ROOF SHEATHING SHALL BE FASTENED WITH ,131" DIA X 2 1/2" RING SHANK NAILS AT 6" O.C. AT ALL PANEL EDGES AND 12" O.C FOR ALL FIELD NAILING WITHIN 6' OF ALL ROOF EDGES AND RIDGE LINES AND 6" O.C. AT ALL PANEL EDGES AND 12" O.C FOR ALL FIELD NAILING FOR REMAINDER OF THE ROOF.
8. FLOOR SHEATHING SHALL BE WOOD STRUCTURAL PANELS (WSP), 23/32" THICK, 48/24 SPAN RATING APA RATED SHEATHING. FLOOR SHEATHING SHALL BE GLUED TO THE FRAMING MEMBERS AND FASTENED WITH ,131 X 2 1/2" RING SHANK NAILS OR 2 1/2" LONG SIMPSON QUIK DRIVE SCREWS AT 6" O.C. AT ALL PANEL EDGES AND 12" O.C. FOR ALL FIELD NAILING.
9. NAILS SPECIFIED IN THESE DRAWINGS SHALL BE OF THE FOLLOWING MINIMUM SIZES (COMMON WIRE NAILS):

NAIL SIZE SHOWN	DIAMETER	LENGTH
8D	.131"	2 1/2"
10D	.148"	3"
16D	.162"	3 1/2"

PNEUMATIC GUN NAILS SHALL MEET THE DIAMETER AND LENGTH SHOWN ABOVE REGARDLESS OF THE NAIL SIZE INDICATED BY THE MANUF.

10. ALL FRAMING CONNECTORS SHOWN ARE BASED ON SIMPSON STRONG-TIE AND THEIR CATALOG PUBLISHED CAPACITY. CONNECTORS FROM OTHER MANUFACTURERS ARE ACCEPTABLE PROVIDED THEY MEET THE SIMPSON STRONG-TIE ALLOWABLE LOADING. ALL CONNECTORS SHALL BE INSTALLED USING THE MAX MUM NAILING SPECIFIED AND PROPER NAIL SIZE, UNO.

GENERAL WOOD CONSTRUCTION NOTES

1. ALL WOOD FRAMED CONSTRUCTION SHALL BE COMPLETED IN ACCORDANCE WITH THE INTERNATIONAL BUILDING CODE (IBC), NATIONAL DESIGN SPECIFICATION FOR WOOD CONSTRUCTION (NDS), LOCAL BUILDING DEPARTMENT REQUIREMENTS, AND GENERALLY ACCEPTED CONSTRUCTION PRACTICE.
2. CONSTRUCTION BRACING SHALL BE PROVIDED BY THE CONTRACTOR TO MAINTAIN THE BUILDING PLUMB AND TRUE.
3. ROOF AND FLOOR FRAMING LAYOUTS ARE PROVIDED TO ILLUSTRATE CONDITIONS OF CONSTRUCTION AND DO NOT NECESSARILY INDICATE SPECIFIC QUANTITIES OF MATERIALS OR COMPONENTS REQUIRED FOR CONSTRUCTION.
4. ALL FASTENERS AND CONNECTIONS NOT SPECIFIED IN THESE DRAWINGS SHALL BE IN ACCORDANCE WITH IBC TABLE 2304.9.1.
5. FRAMED OPENINGS: FOR OPENINGS LESS THAN 4'-0" WIDE, USE 1- TRIMMER AND 1- KING POST EACH END. FOR OPENINGS 4'-0" TO 6'-0" WIDE, USE 2-TRIMMERS AND 1- KING POST EACH END. U.N.O. FOR OPENINGS 6'-0" OR WIDER, USE 2- TRIMMERS AND 2- KING POSTS EACH END. U.N.O.
6. THE NUMBER OF WALL STUDS AT BEARING POINTS OF MULTIPLE MEMBER BEAMS SHALL EXCEED THE NUMBER OF MEMBERS IN THE BEAM BY ONE. ALL ENGINEERED WOOD BEAMS SHALL HAVE 3 STUDS MINIMUM AT EACH BEARING POINT (U.N.O ON PLAN). GIRDER TRUSSES SHALL HAVE 3 STUDS MINIMUM OR 1 STUD MORE THAN THE NUMBER OF PLIES AT EACH BEARING POINT (U.N.O. ON PLAN). THE CENTERLINE OF THE BEAM AND GIRDER TRUSS SHALL ALIGN WITH THE CENTERLINE OF THE SUPPORTING STUDS PACK OR POST. STUD PACKS OR POST SHALL HAVE A CONTINUOUS LOAD PATH TO THE FOUNDATION WITH INTERMEDIATE SUPPORTS THROUGH FLOOR CAVITY TO MATCH THOSE ABOVE.
7. ALL FLUSH BEAMS AND JOISTS TO BE SUPPORTED BY APPROVED HANGER.
8. ALL WOOD FRAMED CHIMNEY CONSTRUCTION TO BE SHEATHED WITH 7/16" EXTERIOR WOOD STRUCTURAL PANEL. PROVIDE (1) CS16 STRAP AT EACH CORNER WITH 11-10d NAILS IN EACH MEMBER (U.N.O. ON PLANS)
9. EXTERIOR WALLS AT VOLUME CEILINGS SHALL BE BALLOON FRAMED TO THE HEIGHT OF THE ADJACENT ROOF OR FLOOR FRAMING MEMBERS.
10. STRUCTURAL MEMBERS SHALL NOT BE CUT OR NOTCHED UNLESS NEEDED FOR OTHER TRADES. NOTCHING AND BORING OF STUDS AND TOP PLATES SHALL CONFORM TO THE PROVISIONS OF IBC SECTIONS 2308.9.10 AND 2308.9.11. WHERE TOP PLATES OR SOLE PLATES ARE CUT FOR PIPES, A REPAIR PLATE WITH MINIMUM 16 GAUGE X 1 1/2 INCH WIDE SHALL BE FASTENED TO EACH PLATE ACROSS AND TO EACH SIDE OF THE OPENING WITH NOT LESS THAN (6) 16d NAILS, IN ACCORDANCE SECTION 2308.9.8 OF THE IBC. WHERE STUDS HAVE BEEN DRILLED FOR PIPE INSTALLATION, A STUD SHOE REPAIR SUCH AS THE SIMPSON SS1.5 SHALL BE INSTALLED.
11. METAL CONNECTORS AND FASTENERS SHALL MEET THE CORROSION RESISTANCE REQUIREMENTS OF THE 2006 TEXAS REVISIONS TO THE 2006 IBC CHAPTER 17

PRE-ENGINEERED WOOD TRUSS NOTES:

1. WORK INCLUDED

   1. FABRICATE, SUPPLY AND ERECT WOOD TRUSSES AS SHOWN ON THE DRAWINGS AND AS SPECIFIED. WORK TO INCLUDE ANCHORAGE, BLOCKING, CURBING, MISCELLANEOUS FRAMING AND BRACING.

2. DEFINITIONS

   TRUSS: THE TERMS "TRUSS" AND "WOOD TRUSS COMPONENT" REFER TO OPEN WEB LOAD CARRYING ASSEMBLIES SUITABLE FOR SUPPORT OF ROOF DECKS OR FLOORS IN BUILDINGS.

   MANUFACTURER: A MANUFACTURER WHO IS REGULARLY ENGAGED IN DESIGN AND FABRICATION OF WOOD TRUSS COMPONENTS.

   TRUSS INSTALLER: BUILDER, CONTRACTOR OR SUB-CONTRACTOR WHO IS RESPONSIBLE FOR THE FIELD STORAGE, HANDLING AND INSTALLATION OF TRUSSES.

3. DESIGN

   A. TRUSSES SHALL BE DESIGNED IN ACCORDANCE WITH THESE SPECIFICATIONS AND WHERE ANY APPLICABLE DESIGN FEATURE IS NOT SPECIFIED HEREIN, DESIGN SHALL BE IN ACCORDANCE WITH APPLICABLE PROVISIONS OF LATEST EDITION OF NATIONAL DESIGN SPECIFICATIONS FOR WOOD CONSTRUCTION (NDS) OF THE AMERICAN FOREST AND PAPER ASSOCIATION (AF & PA), AND DESIGN SPECIFICATIONS FOR METAL PLATE CONNECTED WOOD TRUSSES (ANSI/TPI 1) OF THE TRUSS PLATE INSTITUTE (TPI), AND CODE OF JURISDICTION.

   B. MANUFACTURER SHALL FURNISH DESIGN DRAWINGS BEARING SEAL AND REGISTRATION NUMBER OF A CIVIL OR STRUCTURAL ENGINEER LICENSED IN STATE WHERE TRUSSES ARE TO BE INSTALLED. DRAWINGS SHALL BE APPROVED BY ARCHITECT PRIOR TO FABRICATION.

   C. TRUSS DESIGN DRAWINGS SHALL INCLUDE AS MINIMUM INFORMATION:

      1. SPAN, DEPTH OR SLOPE AND SPACING OF TRUSSES;
      2. REQUIRED BEARING WIDTH;
      3. DESIGN LOADS, AS APPLICABLE:
         A. TOP CHORD LIVE LOAD;
         B. TOP CHORD DEAD LOAD;
         C. BOTTOM CHORD LIVE LOAD;
         D. BOTTOM CHORD DEAD LOAD;
         E. CONCENTRATED LOADS AND THEIR POINTS OF APPLICATION; AND
         F. WIND AND SEISMIC CRITERIA;
      4. ADJUSTMENT TO LUMBER AND PLATE DESIGN LOADS FOR CONDITION OF USE;
      5. REACTIVE FORCES, THEIR POINTS OF OCCURRENCE AND DIRECTION;
      6. ALPINE OR MITEK PLATE TYPE, GAUGE, SIZE AND LOCATION OF PLATE AT EACH JOINT;
      7. LUMBER SIZE, SPECIES AND GRADE FOR EACH MEMBER;
      8. LOCATION OF ANY REQUIRED CONTINUOUS LATER BRACING;
      9. CALCULATED DEFLECTION RATIO AND/OR MAXIMUM DEFLECTION FOR LIVE AND TOTAL LOAD;
      10. MAXIMUM AXIAL COMPRESSIVE FORCES IN TRUSS MEMBERS;
      11. LOCATION OF JOINTS;
      12. CONNECTION REQUIREMENTS FOR:
         A. TRUSS TO TRUSS GIRDERS;
         B. TRUSS PLY TO PLY; AND
         C. FIELD SPLICES.

4. MATERIALS

   A. LUMBER:

      1. LUMBER USED FOR TRUSS MEMBERS SHALL BE IN ACCORDANCE WITH PUBLISHED VALUES OF LUMBER RULES WRITING AGENCIES APPROVED BY THE BOARD OF REVIEW OF AMERICAN LUMBER STANDARDS COMMITTEE. LUMBER SHALL BE IDENTIFIED BY GRADE MARK OF A LUMBER INSPECTION BUREAU OR AGENCY APPROVED BY THAT BOARD, AND SHALL BE AS SHOWN ON DESIGN DRAWINGS.

      2. MOISTURE CONTENT OF LUMBER SHALL BE NO GREATER THAN 19 PERCENT AT TIME OF FABRICATION.

      3. ADJUSTMENT OF VALUES FOR DURATION OF LOAD OR CONDITIONS OF USE SHALL BE IN ACCORDANCE WITH NATIONAL DESIGN SPECIFICATIONS FOR WOOD CONSTRUCTION (NDS).

   B. METAL CONNECTOR PLATES:

      1. METAL CONNECTOR PLATES SHALL NOT LESS THAN .0356 INCHES IN THICKNESS (20 GAGE) AND SHALL MEET OR EXCEED ASTM A653 GRADE 37, AND SHALL BE HOT DIPPED GALVANIZED ACCORDING TO ASTM A653, COATING DESIGNATION G60. DESIGN VALUES SHALL BE DETERMINED IN ACCORDANCE WITH ANSI/TPI 1.

      2. IN HIGHLY CORROSIVE ENVIRONMENTS, SPECIAL APPLIED COATINGS OR STAINLESS STEEL MAY BE REQUIRED.

      3. AT THE REQUEST OF ARCHITECT, MANUFACTURER SHALL FURNISH A CERTIFIED RECORD THAT MATERIALS COMPLY WITH STEEL SPECIFICATIONS.

5. FABRICATION

   TRUSSES SHALL BE FABRICATED IN A PROPERLY EQUIPPED MANUFACTURING FACILITY OF A PERMANENT NATURE. TRUSSES SHALL BE MANUFACTURED BY EXPERIENCED WORKMEN, USING PRECISION CUTTING, JIGGING AND PRESSING EQUIPMENT MEETING REQUIREMENTS OF ANSI/TPI 1, SECTION 3. TRUSS MEMBERS SHALL BE ACCURATELY CUT TO LENGTH ANGLE AND TRUE TO LINE TO ASSURE PROPER FITTING JOINTS WITHIN TOLERANCES SET FORTH IN ANSI/TPI 1, CHAPTER 3, AND PROPER FIT WITH OTHER WORK.

6. HANDLING, INSTALLATION AND BRACING

   A. TRUSSES SHALL BE HANDLED DURING FABRICATION, DELIVERY AND AT JOBSITE SO AS NOT TO BE SUBJECTED TO EXCESSIVE BENDING.

   B. TRUSSES SHALL BE UNLOADED ON SMOOTH GROUND TO AVOID LATERAL STRAIN. TRUSSES SHALL BE PROTECTED FROM DAMAGE THAT MIGHT RESULT FROM ON-SITE ACTIVITIES AND ENVIRONMENTAL CONDITIONS. PREVENT TOPPLING WHEN BANDING IS REMOVED.

   C. HANDLE DURING INSTALLATION IN ACCORDANCE WITH LATEST VERSION OF BUILDING COMPONENT SAFETY INFORMATION (BCSI 1) FROM TPI, AND ANSI/TPI 1. INSTALLATION SHALL BE CONSISTENT WITH GOOD WORKMANSHIP AND GOOD BUILDING PRACTICES AND SHALL BE RESPONSIBILITY OF TRUSS INSTALLER.

   D. APPARENT DAMAGE TO TRUSSES, IF ANY, SHALL BE REPORTED TO MANUFACTURER PRIOR TO INSTALLATION.

   E. TRUSSES SHALL BE SET AND SECURED LEVEL AND PLUMB, AND IN CORRECT LOCATION. TRUSSES SHALL BE HELD IN CORRECT ALIGNMENT UNTIL SPECIFIED PERMANENT BRACING IS INSTALLED.

   F. CUTTING AND ALTERING OF TRUSSES IS NOT PERMITTED.

   G. CONCENTRATED LOADS SHALL NOT BE PLACED ATOP TRUSSES UNTIL ALL SPECIFIED BRACING HAS BEEN INSTALLED AND DECKING IS PERMANENTLY NAILED IN PLACE. SPECIFICALLY AVOID STACKING FULL BUNDLES OF DECKING OR OTHER HEAVY MATERIALS ONTO UNSHEATHED TRUSSES.

   H. ERECTION BRACING IS ALWAYS REQUIRED. PROFESSIONAL ADVICE SHOULD ALWAYS BE SOUGHT TO PREVENT TOPPLING OR DOMINOING OF TRUSSES DURING INSTALLATION.

   I. THE CONTRACTOR IS RESPONSIBLE FOR OBTAINING AND FURNISHING THE MATERIALS USED FOR INSTALLATION AND PERMANENT BRACING.

ALTAR GROUP

ARCHITECTURE
ENGINEERING

SEAL:

STATE OF TEXAS
GERALD T. WYNNE
94081
LICENSED
PROFESSIONAL ENGINEER

11·26·24

CONSULTANT:

Gerald T. Wynne, P.E.
Consulting Structural Engineer
16107 Kensington Drive, Suite 278
Sugar Land, TX 77479
Phone : 832.334.3260
Texas Firm #20169

TAKE 5 OIL CHANGE

TAKE 5 OIL CHANGE
PROTOTYPE: 3 BAY
5331 WALZEM ROAD
SAN ANTONIO, TX 78218

REV	DATE	DESCRIPTION
	11/26/24	ISSUE FOR PERMIT
	02/21/25	RE-ISSUE FOR PERMIT

DRAWN BY: GW

CHECKED BY: GW

GTW PROJECT NO.:

24128

SHEET NAME:

GENERAL NOTES & SPECIFICATIONS

SHEET NUMBER:

S020

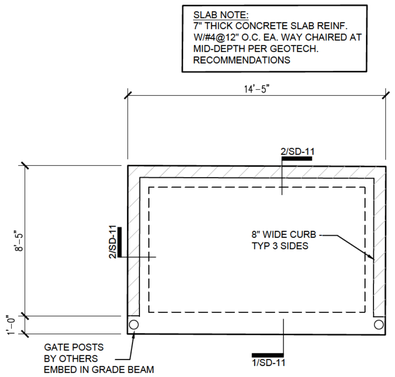

2 TRASH ENCLOSURE FOUNDATION PLAN

SCALE: 1/4" = 1'-0"

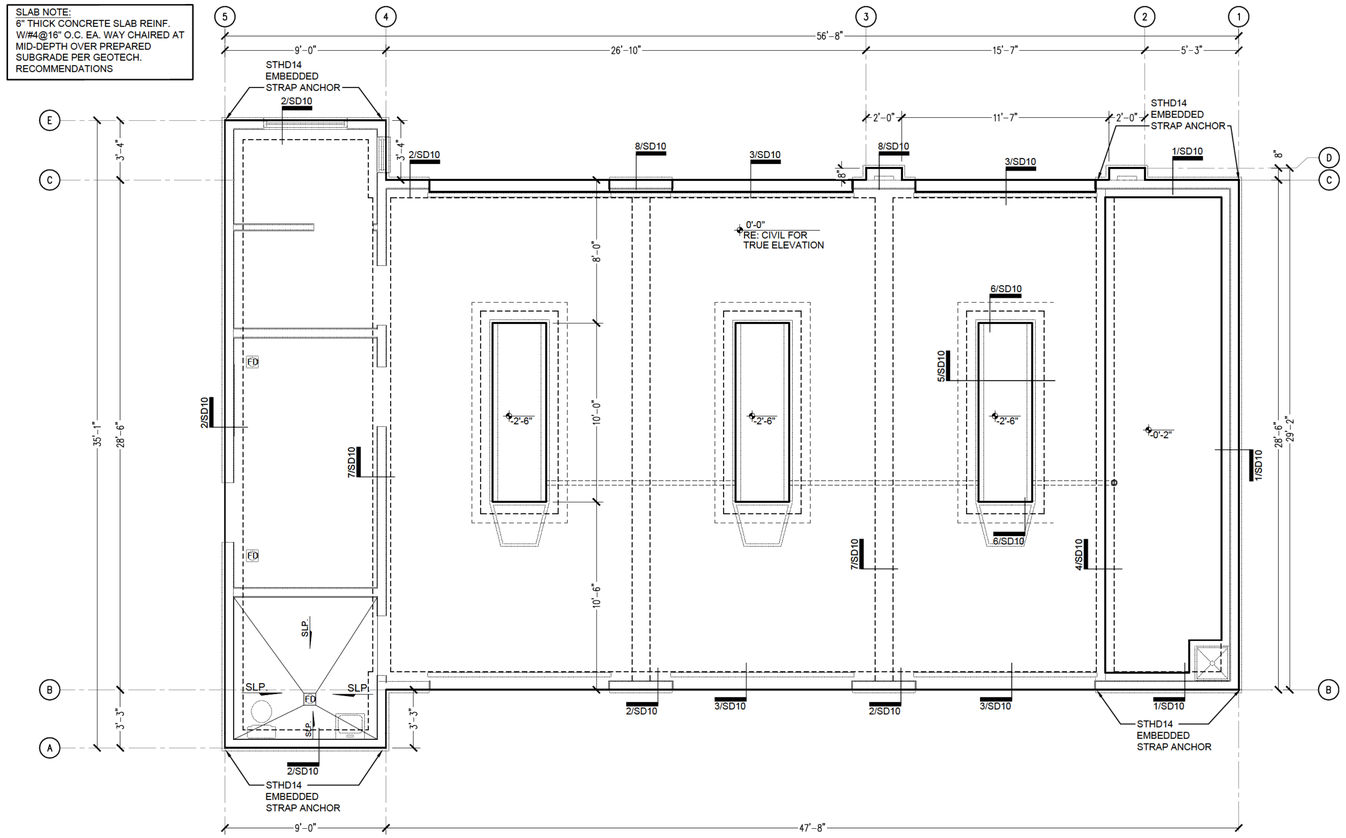

1 FOUNDATION PLAN

SCALE: 1/4" = 1'-0"

FOUNDATION NOTES:

1. ALL EXTERIOR WALLS SHALL BE FASTENED TO THE FOUNDATION USING ONE OF THE FOLLOWING METHODS:
   A. SIMPSON MASA MUDSILL ANCHORS AT 48" O.C.
   B. 1/2" DIAMETER X 7" EMBED. CAST IN PLACE ANCHOR BOLTS AT 48" O.C. WITH STANDARD NIT AND WASHER.
   C. 1/2" DIAMETER X 2 3/4" EMBED. SIMPSON TITEN HD CONCRETE SCREW ANCHORS AT 48" O.C. WITH STANDARD WASHER.

2. ALL FASTENERS INSTALLED IN PRESERVATIVE TREATED WOOD SHALL BE COATED IN ACCORDANCE WITH MANUFACTURERS RECOMMENDATIONS.

3. COORDINATE PLUMBING AND UTILITY LINE LOCATIONS AS SPECIFIED IN THE SLAB ON GRADE GENERAL NOTES.

4. COORDINATE ALL STEPS, SLOPES AND DIMENSIONS NOT SHOWN HERE WITH ARCHITECTURAL DRAWINGS.

NOTE: EXISTING SOILS SHALL BE MODIFIED IN ACCORDANCE WITH GEOTECHNICAL RECOMMENDATIONS. MODIFICATIONS SHALL CONSIST OF OVEREXCAVATION OF 7'-0" OF EXISTING EXPANSIVE SOILS AND REPLACED WITH 3'-0" (MIN.) OF SELECT FILL OVER 4'-0" OF RECONDITIONED EXISTING SOILS IN PROPERLY COMPACTED LIFTS TO ACHIEVE THE RECOMMENDED BUILDING PAD. SOIL REMEDIATION IMPROVEMENTS SHALL CREATE A BUILDING PAD A MINIMUM OF 5'-0" OUTSIDE THE BUILDING FOOTPRINT AREA.

RE: GEOTECHNICAL ENGINEER FOR ADDITIONAL INFORMATION.

ALTAR GROUP

ARCHITECTURE
ENGINEERING

SEAL:

STATE OF TEXAS
GERALD T. WYNNE
94081
LICENSED PROFESSIONAL ENGINEER
11·26·24

CONSULTANT:

Gerald T. Wynne, P.E.
Consulting Structural Engineer
16107 Kensington Drive, Suite 278
Sugar Land, TX 77479
Phone : 832.334.3260
Texas Firm #20169

TAKE 5 OIL CHANGE
PROTOTYPE: 3 BAY

5331 WALZEM ROAD
SAN ANTONIO, TX 78218

REV	DATE	DESCRIPTION
	11/26/24	ISSUE FOR PERMIT
	02/21/25	RE-ISSUE FOR PERMIT

DRAWN BY: GW
CHECKED BY: GW
GTW PROJECT NO.: 24128
SHEET NAME: FOUNDATION PLAN
SHEET NUMBER: S101

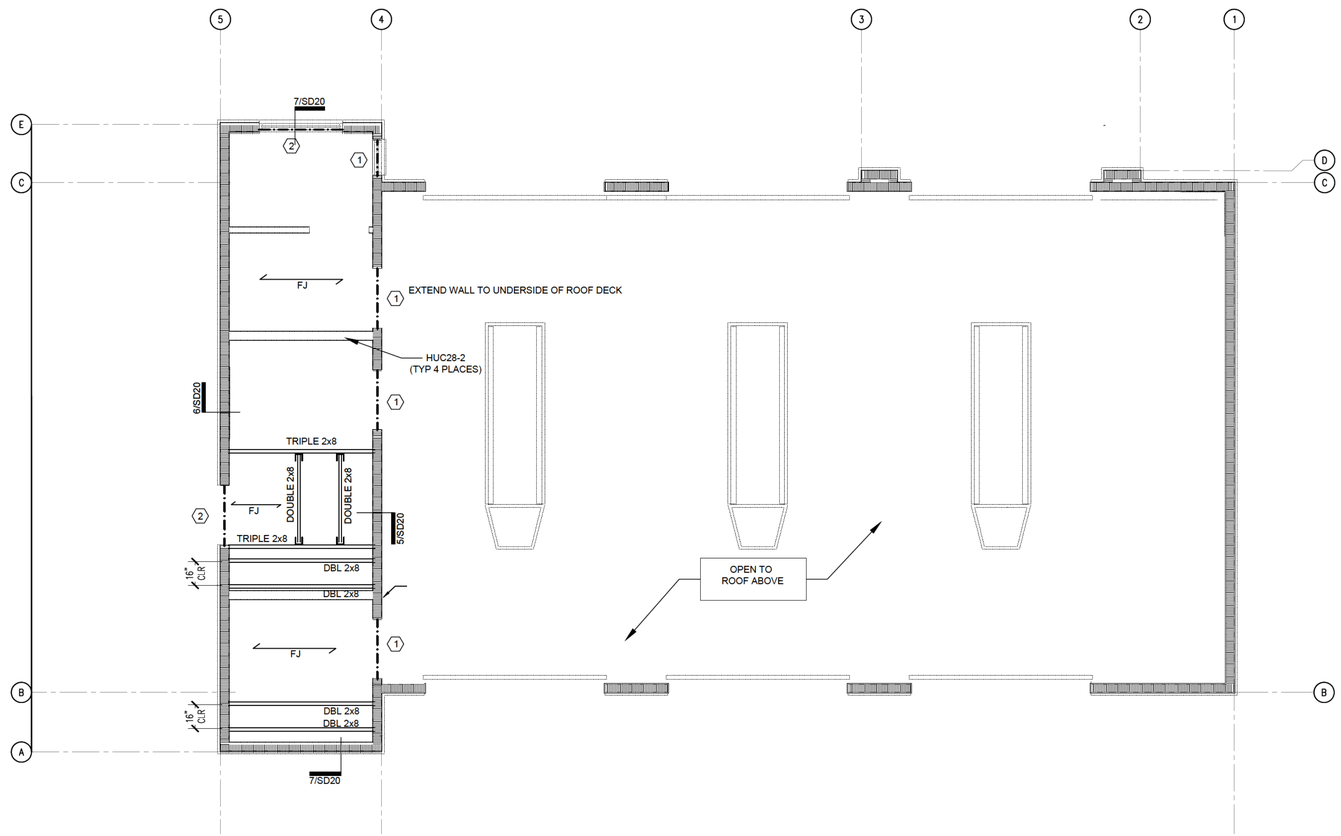

FRAMING NOTES:

1. FRAMING SHALL BE AS FOLLOWS:
   FJ = 2X8 FLOOR JOIST AT 12" O.C.
2. SPAN ARROWS INDICATE JOIST SPAN DIRECTION.
3. HATCHED WALLS ON PLAN INDICATE LOAD BEARING WALL LOCATIONS. REFER TO STUD SCHEDULE FOR ADDITIONAL INFORMATION.
4. COORDINATE PLUMBING AND MECHANICAL LOCATIONS WITH FRAMING. FRAMING MEMBERS SHALL NOT BE DAMAGED DUE TO INSTALLATION OF MECHANICAL OR PLUMBING SYSTEM AND ENGINEER SHALL BE NOTIFIED OF CONFLICTS. FOR PROPER RESOLUTION.
5. PRE-MANUFACTURED WALL COMPONENTS MAY BE USED IN LIEU OF HEADERS SHOWN. MANUFACTURER SHALL DESIGN COMPONENTS TO SUPPORT FRAMING LOADS FROM THIS LEVEL AND THOSE ABOVE AS REQUIRED.
6. COORDINATE ALL STEPS, SLOPES AND DIMENSIONS NOT SHOWN HERE WITH ARCHITECTURAL DRAWINGS.
7. ALL DETAILS AND SECTIONS SHALL BE CONSIDERED TYPICAL FOR ALL SIMILAR CONDITIONS, U.N.O.
8. REFER TO ROOF FRAMING PLAN FOR NOTES AND SCHEDULES REGARDING LOW ROOF CONDITIONS.

STUD SCHEDULE:
ALL LOAD BEARING WALLS SHALL BE FRAMED WITH 2X6@16" O.C. @EXTERIOR AND INTERIOR LOAD BEARING WALLS (TYP, UNO). PROVIDE 2X6 @16" O.C. AT ALL PLUMBING WALLS AND WHERE SHOWN ON ARCH. PLANS

SHEATHING NOTE:
ALL EXTERIOR WALLS SHALL BE SHEATHED WITH $\frac{7}{16}$" OSB FASTENED TO THE STUDS WITH .131X2$\frac{1}{2}$" NAILS AT 6" O.C. AT PANEL EDGES AND 12" O.C. AT FIELD

HEADER/BEAM SCHEDULE

1 (3) 2X8
2 (3) 2X10
3 (3) 2X12
FB = FLUSH BEAM

1 ATTIC FRAMING PLAN
SCALE: 1/4" = 1'-0"

ALTAR GROUP
ARCHITECTURE
ENGINEERING

SEAL:

STATE OF TEXAS
GERALD T. WYNNE
94081
LICENSED
PROFESSIONAL ENGINEER
11·26·24

CONSULTANT:

Gerald T. Wynne, P.E.
Consulting Structural Engineer
16107 Kensington Drive, Suite 278
Sugar Land, TX 77479
Phone : 832.334.3260
Texas Firm #26169

TAKE 5 OIL CHANGE
PROTOTYPE:3 BAY
5331 WALZEM ROAD
SAN ANTONIO, TX 78218

REV	DATE	DESCRIPTION
	11/26/24	ISSUE FOR PERMIT
	02/21/25	RE-ISSUE FOR PERMIT

DRAWN BY: GW
CHECKED BY: GW
GTW PROJECT NO.:
24128
SHEET NAME:
ATTIC FRAMING PLAN
SHEET NUMBER:
S201

GT UPLIFT ANCHORAGE:
ALL GT > 15' LONG SHALL BE FASTENED TO THE STUDS BELOW WITH AN LGT2/LGT3 ANCHOR. PROVIDE LTT19 TO STUD PACK FASTENED W/ EPOXY ROD TO FOUNDATION WITH 8" MIN EMBEDMENT.

GT 15'-0" LONG AND LESS SHALL HAVE (2) H2.5A CLIPS EACH END WITH TSP CLIP TO THE STUD PACK BELOW.

HEADER/BEAM UPLIFT ANCHORAGE:
ALL BEAMS & HEADERS AT THE TOP LEVEL > 5' LONG SHALL BE FASTENED TO THE STUDS BELOW WITH (1) CS16 STRAP EACH END WITH 11-10d NAILS EACH MEMBER. PROVIDE LTT19 TO STUD PACK FASTENED W/ EPOXY ROD TO FOUNDATION WITH 8" MIN EMBEDMENT.

UPLIFT ANCHORAGE SCHEDULE-1 STORY

TRUSS TO TOP PLATE	TOP PLATE TO STUD	STUD TO BOTTOM PLATE
H2.5A @ 24" O.C.	TSP @ 48" O.C.	H3 CLIP @ 48" O.C.

UPLIFT SCHEDULE NOTES:
(1) PROVIDE ANCHORAGE SHOWN AT ALL ROOF TRUSS BEARING WALLS.
(2) (*) INDICATES THESE ANCHORS ARE NOT REQUIRED WHERE ROOF TRUSS SPAN IS LESS THAN 8'-0".
(3) (NR) INDICATES NO ANCHOR IS REQUIRED AT THIS LOCATION.
(4) ALL ANCHORS SHOWN ARE SIMPSON STRONG-TIE PRODUCTS. OTHER PRODUCTS MAY BE ACCEPTABLE PENDING ENGINEER REVIEW.
(5) REFER TO FRAMING DETAILS FOR MORE INFORMATION REGARDING ANCHOR PLACEMENT.

STUD SCHEDULE:
ALL LOAD BEARING WALLS SHALL BE FRAMED WITH 2X6@16" O.C. @EXTERIOR AND INTERIOR LOAD BEARING WALLS (TYP, UNO). PROVIDE 2X6 @16" O.C. AT ALL PLUMBING WALLS AND WHERE SHOWN ON ARCH. PLANS

SHEATHING NOTE:
ALL EXTERIOR WALLS SHALL BE SHEATHED WITH $\frac{7}{16}$" OSB FASTENED TO THE STUDS WITH .131X2 $\frac{1}{2}$" NAILS AT 6" O.C. AT PANEL EDGES AND 12" O.C. AT FIELD

ROOF FRAMING NOTES:

1. ROOF FRAMING SHALL BE PRE-ENGINEERED WOOD TRUSSES AT 24" O.C. (TYP., U.N.O.)

   RT = ROOF TRUSS AT 24" O.C.
   GT = GIRDER TRUSS
   DF= INDICATES DRAG TRUSS TO ALIGN WITH SHEARWALL BELOW AND REQUIRED DRAG FORCE. SEE DETAILS FOR ADDITIONAL INFORMATION.

2. SPAN ARROWS INDICATE TRUSS SPAN DIRECTION. ACTUAL LAYOUT OF TRUSSES SHALL BE PROVIDED BY TRUSS MANUFACTURER.

3. HATCHED WALLS ON PLAN INDICATE LOAD BEARING WALL LOCATIONS. REFER TO STUD SCHEDULE FOR ADDITIONAL INFORMATION.

4. COORDINATE PLUMBING AND MECHANICAL LOCATIONS WITH FRAMING AND TRUSS DRAWINGS. FRAMING MEMBERS SHALL NOT BE DAMAGED DUE TO INSTALLATION OF MECHANICAL OR PLUMBING SYSTEM AND ENGINEER SHALL BE NOTIFIED OF CONFLICTS. FOR PROPER RESOLUTION. TRUSS MANUFACTURER SHALL PROVIDE OPEN CHASES AS REQUIRED FOR MEP SYSTEMS.

5. PRE-MANUFACTURED WALL COMPONENTS MAY BE USED IN LIEU OF HEADERS SHOWN. MANUFACTURER SHALL DESIGN COMPONENTS TO SUPPORT FRAMING LOADS FROM THIS LEVEL AND THOSE ABOVE AS REQUIRED.

6. COORDINATE ALL STEPS, SLOPES AND DIMENSIONS NOT SHOWN HERE WITH ARCHITECTURAL DRAWINGS.

7. ALL DETAILS AND SECTIONS SHALL BE CONSIDERED TYPICAL FOR ALL SIMILAR CONDITIONS, U.N.O.

HEADER/BEAM SCHEDULE

1 (3) 2X8
2 (3) 2X10
3 (3) 2X12
FB = FLUSH BEAM

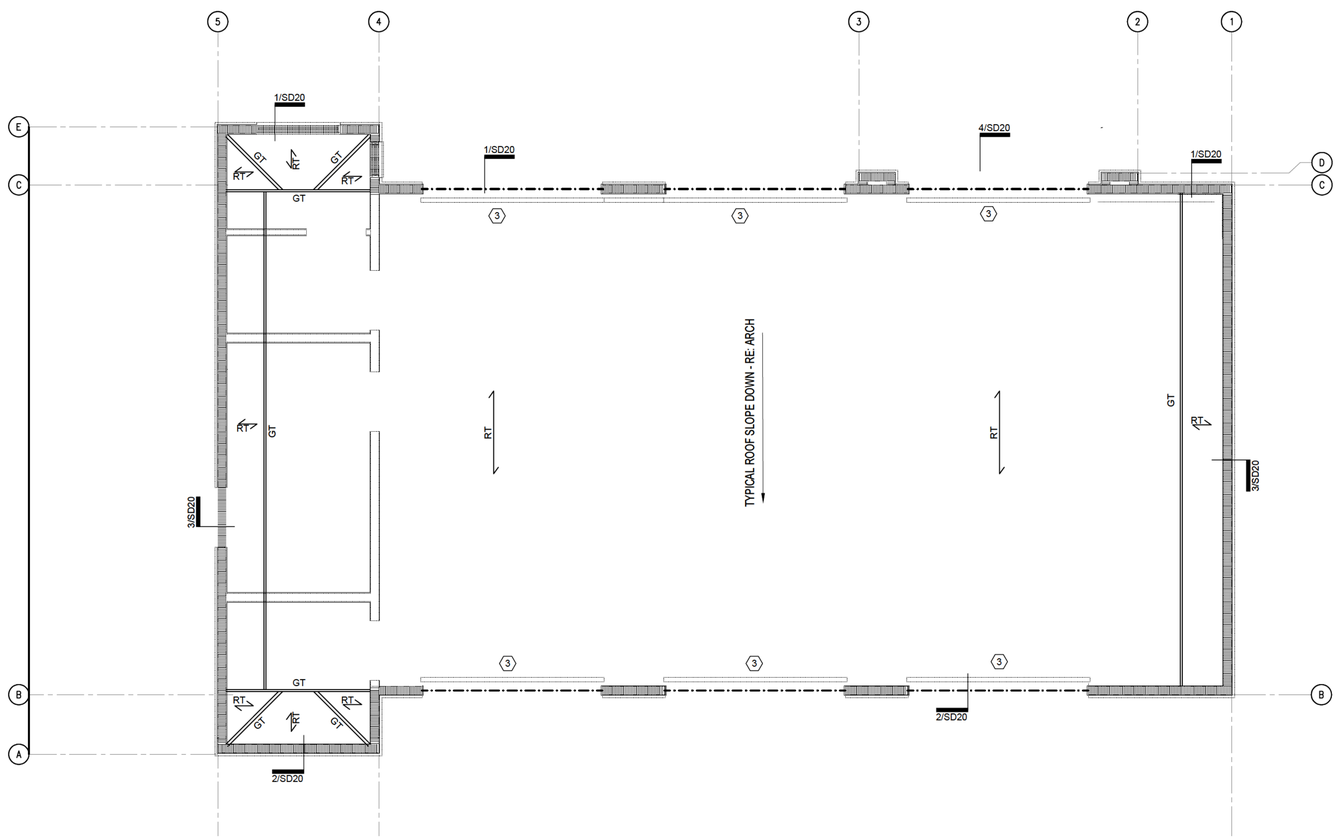

1 ROOF FRAMING PLAN
SCALE: 1/4" = 1'-0"

ALTAR GROUP
ARCHITECTURE
ENGINEERING

SEAL:
STATE OF TEXAS
GERALD T. WYNNE
94081
LICENSED
PROFESSIONAL ENGINEER
11·26·24

CONSULTANT:
Gerald T. Wynne, P.E.
Consulting Structural Engineer
16107 Kensington Drive, Suite 278
Sugar Land, TX 77479
Phone : 832.334.3260
Texas Firm #20169

TAKE 5 OIL CHANGE
PROTOTYPE:3 BAY
5331 WALZEM ROAD
SAN ANTONIO, TX 78218

REV	DATE	DESCRIPTION
	11/26/24	ISSUE FOR PERMIT
	02/21/25	RE-ISSUE FOR PERMIT

DRAWN BY: GW
CHECKED BY: GW
GTW PROJECT NO.:
24128
SHEET NAME:
ROOF FRAMING PLAN
SHEET NUMBER:
S301

(1) 10 MIL VAPOR RETARDER LAYER
(2) 4" MIN. GRADED AGGREGATE BASE
(3) SLAB REINFORCING - SEE PLAN
(4) FINISH GRADE - RE: CIVIL
(5) TYPICAL GRADE BEAM REINF. CONT
(6) EXTERIOR STUD WALL - SEE FRAMING PLAN
(7) #4X 2'X2' DIAGONAL BAR @ 24" O.C.
(8) 1 - #4 TOP & BOTT W/ HOOK EA END AND #3 STIRRUPS @ 8" O.C.

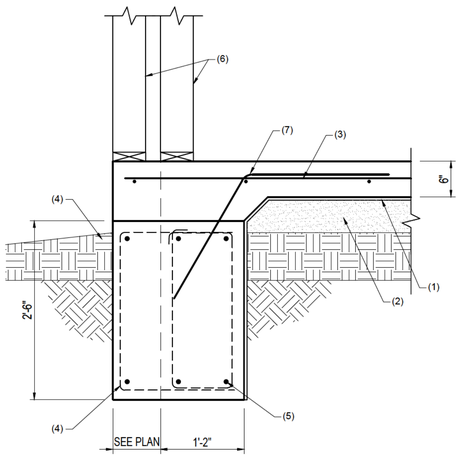

8 GRADE BEAM DTL at BUMPOUT

(1) 10 MIL VAPOR RETARDER LAYER
(2) 4" MIN. GRADED AGGREGATE BASE
(3) SLAB REINFORCING - SEE PLAN
(4) #5 DOWELS @ 12" O.C.
(5) #5 @ 18" O.C. (HORIZ)
(6) #5 @ 12" O.C. (VERT)
(7) #5 @ 12" O.C. EACH WAY
(8) STEEL PIT FRAME ASSEMBLY (BY G.C.)

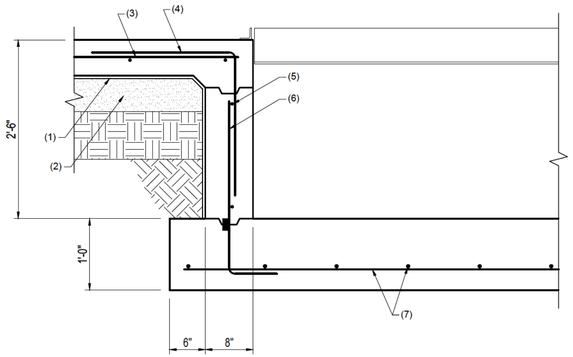

6 TRENCH DETAIL

(1) 10 MIL VAPOR RETARDER LAYER
(2) 4" MIN. GRADED AGGREGATE BASE
(3) SLAB REINFORCING - SEE PLAN
(4) #4X 2'X2' DIAGONAL BAR @ 24" O.C.
(5) 2 - #5 CONT. TOP & BOTT W/ #3 STIRRUPS @ 24" O.C.

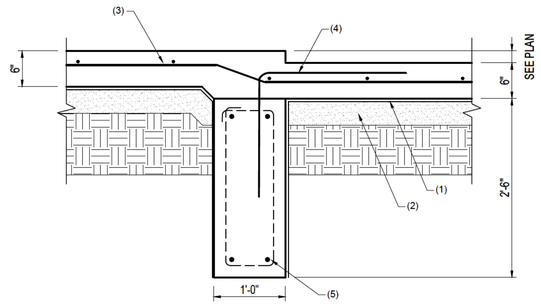

4 DETAIL at SLAB DEPRESSION

(1) 10 MIL VAPOR RETARDER LAYER
(2) 4" MIN. GRADED AGGREGATE BASE
(3) SLAB REINFORCING - SEE PLAN
(4) FINISH GRADE - RE: CIVIL
(5) 2 - #5 CONT. TOP & BOTT W/ #3 STIRRUPS @ 24" O.C.
(6) EXTERIOR STUD WALL - SEE FRAMING PLAN
(7) #4X 2'X2' DIAGONAL BAR @ 24" O.C.

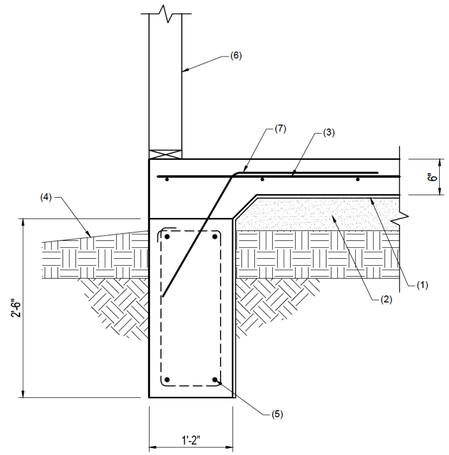

2 GRADE BEAM DETAIL at EXTERIOR WALL

(1) 10 MIL VAPOR RETARDER LAYER
(2) 4" MIN. GRADED AGGREGATE BASE
(3) SLAB REINFORCING - SEE PLAN
(4) FINISH GRADE - RE: CIVIL
(5) 2 - #5 CONT. TOP & BOTT W/ #3 STIRRUPS @ 24" O.C.

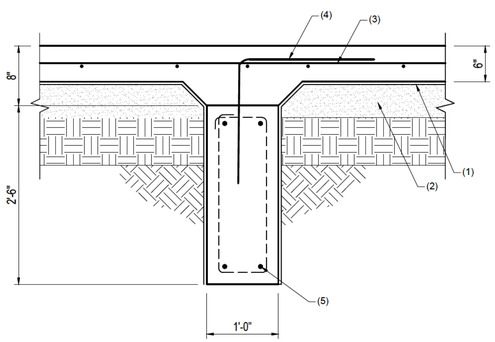

7 INTERIOR GRADE BEAM DETAIL

(1) 10 MIL VAPOR RETARDER LAYER
(2) 4" MIN. GRADED AGGREGATE BASE
(3) SLAB REINFORCING - SEE PLAN
(4) #5 DOWELS @ 12" O.C.
(5) #5 @ 18" O.C. (HORIZ)
(6) #5 @ 12" O.C. (VERT)
(7) #5 @ 12" O.C. EACH WAY
(8) STEEL PIT FRAME ASSEMBLY (BY G.C.)
(9) #4 NOSING BAR CONT.

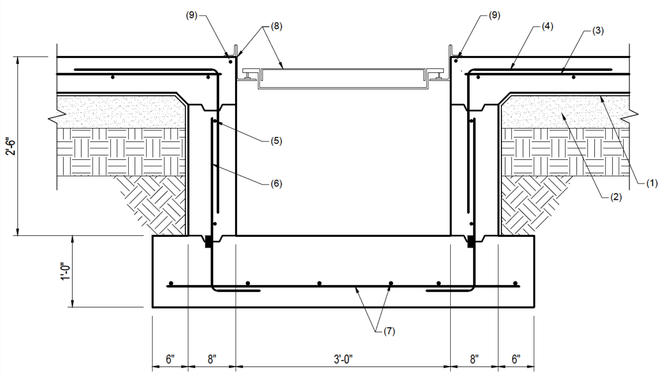

5 TRENCH DETAIL

(1) 10 MIL VAPOR RETARDER LAYER
(2) 4" MIN. GRADED AGGREGATE BASE
(3) SLAB REINFORCING - SEE PLAN
(4) PAVING - RE: CIVIL
(5) 2 - #5 CONT. TOP & BOTT W/ #3 STIRRUPS @ 24" O.C.
(6) #4X 2'X2' DIAGONAL BAR @ 24" O.C.

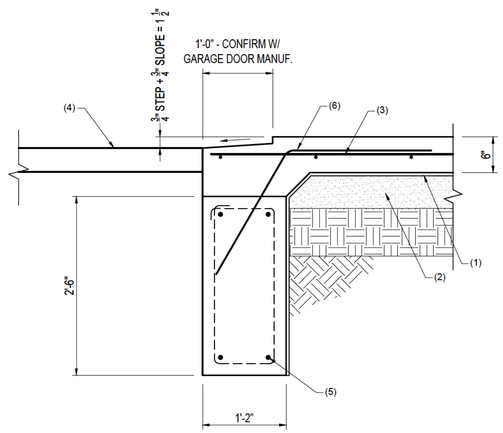

3 GRADE BEAM DETAIL at O.H. DOOR

(1) 10 MIL VAPOR RETARDER LAYER
(2) 4" MIN. GRADED AGGREGATE BASE
(3) SLAB REINFORCING - SEE PLAN
(4) FINISH GRADE - RE: CIVIL
(5) 2 - #5 CONT. TOP & BOTT W/ #3 STIRRUPS @ 24" O.C.
(6) EXTERIOR STUD WALL - SEE FRAMING PLAN
(7) #4X 2'X2' DIAGONAL BAR @ 24" O.C.

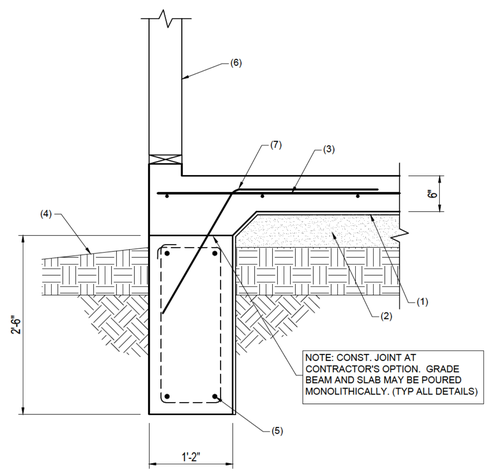

NOTE: CONST. JOINT AT CONTRACTOR'S OPTION. GRADE BEAM AND SLAB MAY BE POURED MONOLITHICALLY. (TYP ALL DETAILS)

1 GRADE BEAM DETAIL at EXTERIOR CURB

ALTAR GROUP
ARCHITECTURE
ENGINEERING

SEAL:

STATE OF TEXAS
GERALD T. WYNNE
94081
LICENSED
PROFESSIONAL ENGINEER
11·26·24

CONSULTANT:

Gerald T. Wynne, P.E.
Consulting Structural Engineer
16107 Kensington Drive, Suite 278
Sugar Land, TX 77479
Phone : 832.334.3260
Texas Firm #26169

TAKE 5 OIL CHANGE
PROTOTYPE: 3 BAY
5331 WALZEM ROAD
SAN ANTONIO, TX 78218

REV	DATE	DESCRIPTION
	11/26/24	ISSUE FOR PERMIT
	02/21/25	RE-ISSUE FOR PERMIT

DRAWN BY: GW
CHECKED BY: GW
GTW PROJECT NO.: 24128
SHEET NAME: FOUNDATION DETAILS
SHEET NUMBER: SD10

(1) 10 MIL VAPOR RETARDER LAYER
(2) 4" MIN. GRADED AGGREGATE BASE
(3) SLAB REINFORCING - SEE PLAN
(4) FINISH GRADE/PAVING - RE: CIVIL
(5) WOOD FENCE BY G.C. - RE: ARCH
(6) 2 - #5 CONT. TOP & BOTT W/ #3 STIRRUPS @ 24" O.C.
(7) #4X 2'X2' DIAGONAL BAR @ 24" O.C.

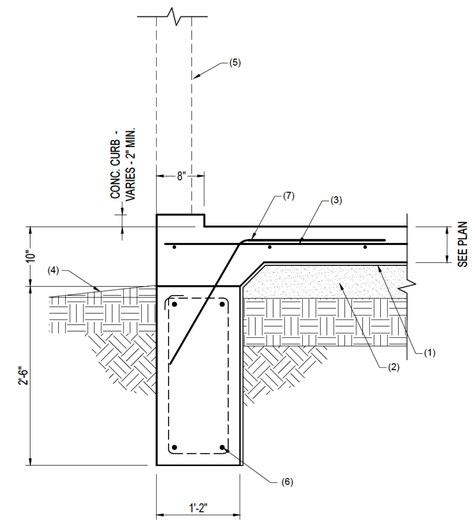

2 DETAIL at TRASH ENCLOSURE

(1) LIGHT POLE, BASE PLATE, AND ANCHOR BOLTS BY MANUF.
(2) 24" DIA X 10'-0" DEEP PIER FOOTING REINF. W/8-#5 VERTICALS WITH #3 TIES AT 12" O.C.
(3) 3 ADD'L TIES AT 3" O.C. AT T/PIER
(4) GRADE OR PAVING - RE: CIVIL.
(5) CONDUIT - RE: ELEC DWGS.

NOTE: MAX. LIGHT POLE HEIGHT = 25'-0"

NOTE: ALL EXPOSED CONCRETE TO HAVE SMOOTH RUBBED SURFACE

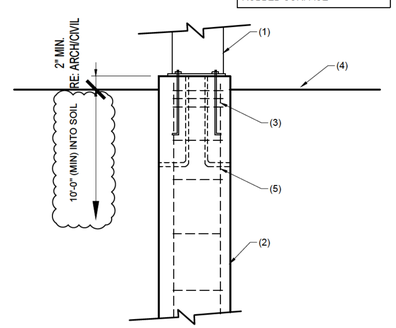

3 LIGHT POLE BASE DETAIL

(1) 10 MIL VAPOR RETARDER LAYER
(2) 4" MIN. GRADED AGGREGATE BASE
(3) SLAB REINFORCING - SEE PLAN
(4) PAVING - RE: CIVIL
(5) #4X 2'X2' DIAGONAL BAR @ 24" O.C.
(6) #4X 2'-0" DOWELS @ 12" O.C. AT WALL OPENINGS WITH GREASED SLEEVE IN PAVING.

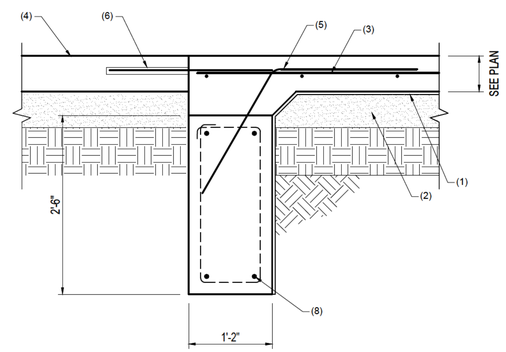

1 DETAIL at TRASH ENCLOSURE

ALTAR GROUP
ARCHITECTURE
ENGINEERING

SEAL:

STATE OF TEXAS
GERALD T. WYNNE
94081
LICENSED
PROFESSIONAL ENGINEER
11·26·24

CONSULTANT:

Gerald T. Wynne, P.E.
Consulting Structural Engineer
16107 Kensington Drive, Suite 278
Sugar Land, TX 77479
Phone : 832.334.3260
Texas Firm #26169

TAKE 5 OIL CHANGE
PROTOTYPE: 3 BAY
5331 WALZEM ROAD
SAN ANTONIO, TX 78218

REV	DATE	DESCRIPTION
	11/26/24	ISSUE FOR PERMIT
	02/21/25	RE-ISSUE FOR PERMIT

DRAWN BY: GW
CHECKED BY: GW
GTW PROJECT NO.: 24128
SHEET NAME: FOUNDATION DETAILS
SHEET NUMBER: SD11

(1) FLOOR JOIST (FJ) - SEE PLAN
(2) FLOOR SHEATHING
(3) WOOD STUD WALL. SEE SCHEDULE
(4) EDGE NAILING
(5) 2X10 LEDGER CONT. W/ 2- 1/4" DIA.X4" SDS SCREWS @ EA. STUD

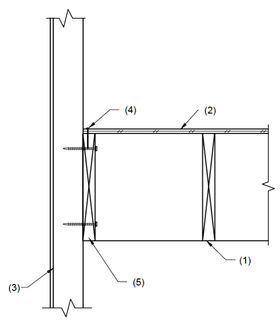

7 ATTIC FLOOR FRAMING DETAIL

(1) FLOOR JOIST (FJ) - SEE PLAN
(2) FLOOR SHEATHING
(3) WOOD STUD WALL. SEE SCHEDULE
(4) EDGE NAILING
(5) (2) 2X10 BLOCKING BETWEEN STUDS
(6) 2X10 LEDGER CONT. W/ 3- 1/4" DIA.X4" SDS SCREWS @ 12" O.C. STAGGERED
(7) LUS210 HANGER EA. JOIST

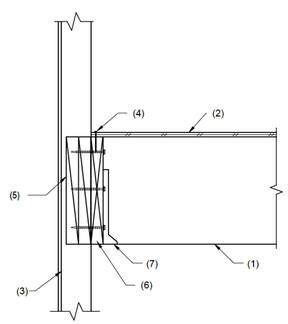

6 ATTIC FLOOR FRAMING DETAIL

(1) FLOOR JOIST (FJ) - SEE PLAN
(2) FLOOR SHEATHING
(3) WOOD STUD WALL. SEE SCHEDULE
(4) BOTTOM PLATE NAILING. SEE FASTENING SCHEDULE OR SHEARWALL SCHEDULE
(5) 2X10 RIM JOIST CONT.
(6) 10d SLANT NAILS @6" O.C.

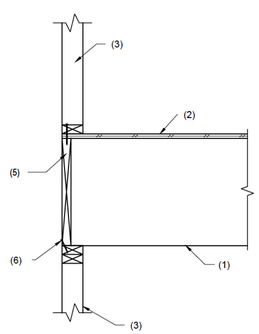

5 ATTIC FLOOR FRAMING DETAIL

(1) ROOF TRUSS W/EXTENDED 2X6 END VERTICAL FOR PARAPET
(2) ROOF SHEATHING
(3) WALL FRAMING - SEE PLAN NOTES. PROVIDE 2X RIPPED PLATE OVER BOTH WALLS
(4) EDGE NAIL
(5) 2X BLOCK EA. BAY W/ (4) 8d NAILS
(6) UPLIFT CLIPS - SEE SCHED ON PLAN
(7) 2X8 BLOCK EACH BAY
(8) 2X 6 DOUBLE TOP PLATE CONT.
(9) 2X 4 AT 24" O.C. OVERHANG FRAMING FASTENED TO ROOF TRUSS
(10) $\frac{7}{16}$" W.S.P. SHEATHING WITH 8d NAILS AT 6" O.C. AT PANEL EDGES/ 12" O.C. FIELD

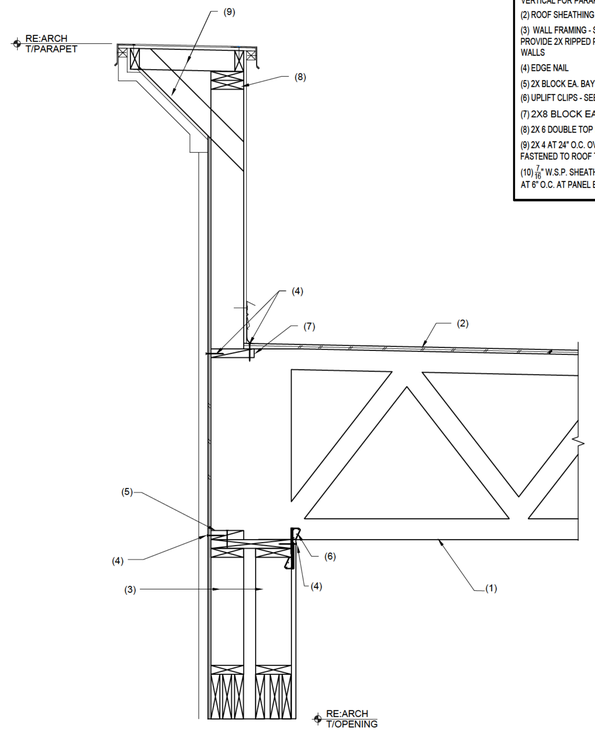

4 ROOF FRAMING DETAIL AT HIGH PARAPET

(1) ROOF TRUSS W/EXTENDED 2X4 END VERTICAL FOR PARAPET
(2) ROOF SHEATHING
(3) WALL FRAMING - SEE PLAN NOTES
(4) EDGE NAIL
(5) 2X BLOCK EA. BAY W/ (4) 8d NAILS
(6) UPLIFT CLIPS - SEE SCHED ON PLAN
(7) 2X8 BLOCK EACH BAY
(8) 2X 6 DOUBLE TOP PLATE CONT.
(9) $\frac{7}{16}$" W.S.P. SHEATHING WITH 8d NAILS AT 6" O.C. AT PANEL EDGES/ 12" O.C. FIELD

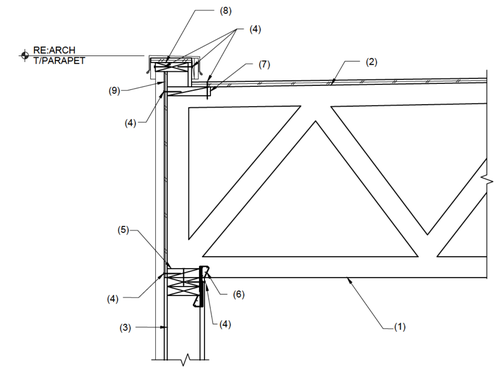

2 ROOF FRAMING DETAIL AT REAR WALL

(1) ROOF TRUSS W/EXTENDED 2X4 END VERTICAL FOR PARAPET
(2) ROOF SHEATHING
(3) WALL FRAMING - SEE PLAN NOTES
(4) EDGE NAIL
(5) 2X BLOCK EA. BAY W/ (4) 8d NAILS
(6) UPLIFT CLIPS - SEE SCHED ON PLAN
(7) 2X8 BLOCK EACH BAY
(8) 2X 6 DOUBLE TOP PLATE CONT.
(9) $\frac{7}{16}$" W.S.P. SHEATHING WITH 8d NAILS AT 6" O.C. AT PANEL EDGES/ 12" O.C. FIELD
(10) GIRDER TRUSS (GT)

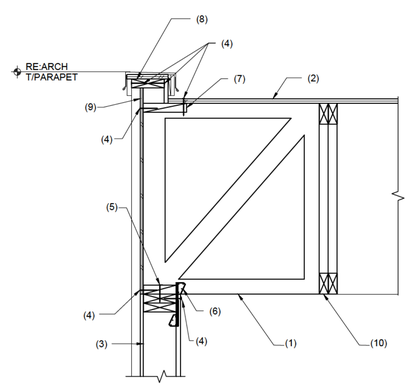

3 ROOF FRAMING DETAIL AT SIDE WALLS

(1) ROOF TRUSS W/EXTENDED 2X4 END VERTICAL FOR PARAPET
(2) ROOF SHEATHING
(3) WALL FRAMING - SEE PLAN NOTES
(4) EDGE NAIL
(5) 2X BLOCK EA. BAY W/ (4) 8d NAILS
(6) UPLIFT CLIPS - SEE SCHED ON PLAN
(7) 2X8 BLOCK EACH BAY
(8) 2X 6 DOUBLE TOP PLATE CONT.
(9) $\frac{7}{16}$" W.S.P. SHEATHING WITH 8d NAILS AT 6" O.C. AT PANEL EDGES/ 12" O.C. FIELD

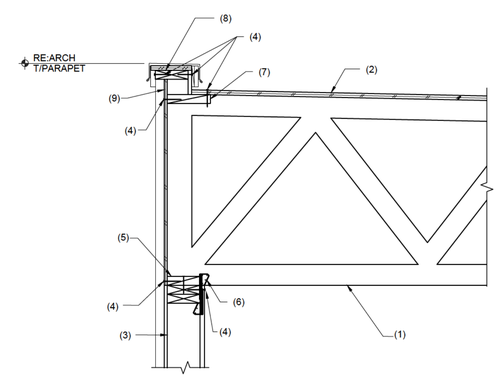

1 ROOF FRAMING DETAIL AT FRONT WALL

ALTAR GROUP
ARCHITECTURE
ENGINEERING

SEAL:

STATE OF TEXAS
GERALD T. WYNNE
94081
LICENSED
PROFESSIONAL ENGINEER
11·26·24

CONSULTANT:

Gerald T. Wynne, P.E.
Consulting Structural Engineer
16107 Kensington Drive, Suite 278
Sugar Land, TX 77479
Phone: 832.334.3260
Texas Firm #201659

TAKE 5 OIL CHANGE
PROTOTYPE:3 BAY
5331 WALZEM ROAD
SAN ANTONIO, TX 78218

REV	DATE	DESCRIPTION
	11/26/24	ISSUE FOR PERMIT
	02/21/25	RE-ISSUE FOR PERMIT

DRAWN BY: GW
CHECKED BY: GW
GTW PROJECT NO.: 24128
SHEET NAME: ROOF FRAMING DETAILS
SHEET NUMBER: SD20

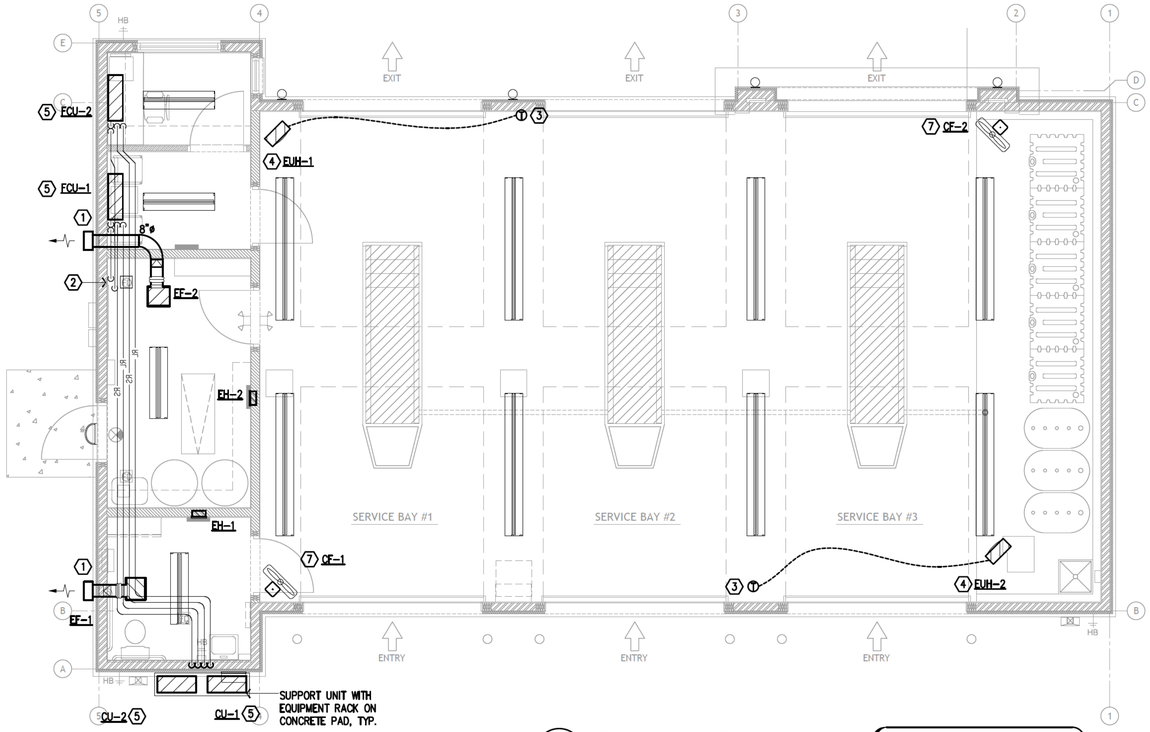

1 MECHANICAL PLAN
SCALE: 1/4" = 1'-0"

VEHICLES ARE ONLY OPERATED FOR THE DURATION OF MOVING THEM IN AND OUT OF THE GARAGE.

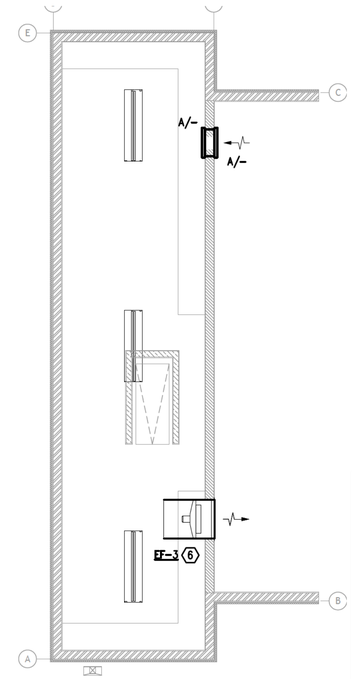

2 MECHANICAL ATTIC PLAN
SCALE: 1/4" = 1'-0"

KEYED NOTES

1. EXHAUST DUCT THRU WALL. TERMINATE WITH WALL CAP, BROAN 643 OR EQUAL.
2. ROUTE 3/4"ø CONDENSATE DRAIN FROM FAN COIL UNIT(S) UP WALL, ABOVE CEILING TO BACK ROOM, AND TERMINATE AT FLOOR SINK WITH AIR GAP.
3. INSULATE WALL BOX BETWEEN THERMOSTAT AND WALL.
4. COORDINATE LOCATION OF HEATER WITH TAKE 5 REPRESENTATIVE. INSTALL PER MANUFACTURER'S RECOMMENDATIONS. MAINTAIN SERVICE CLEARANCES AROUND HEATER.
5. ROUTE REFRIGERANT PIPING FROM OUTDOOR UNIT TO THE ASSOCIATED INDOOR UNIT. INSTALL PER MANUFACTURER'S RECOMMENDATIONS. INSULATE BOTH REFRIGERANT LINES OF HEAT PUMP. DO NOT INTERRUPT INSULATION FOR HANGERS OR ANY OBSTRUCTIONS.
6. MOUNT FAN AT 7'-0" A.F.F. FROM BOTTOM OF FAN.
7. MOUNT CIRCULATION FAN ON WALL AT 10'-0" A.F.F.
8. 18"x18" RETURN/TRANSFER GRILLES ON BOTH SIDES OF WALL. MOUNT GRILLES AS HIGH AS POSSIBLE BELOW STRUCTURE.

GENERAL NOTES

A. PROVIDE VOLUME DAMPER IN SUPPLY, AND EXHAUST BRANCH DUCT, INCLUDING THOSE CONNECTING TO BOTTOM OF MAIN TRUNKS.

B. MAXIMUM ALLOWABLE FLEXIBLE DUCT LENGTH IS 8'-0". THE USE OF FLEXIBLE DUCT IN RETURN AND EXHAUST BRANCHES FOR CONNECTING TO AIR DEVICES IS NOT ALLOWED.

C. COORDINATE FINAL LOCATIONS OF THERMOSTATS WITH OWNER AND ARCHITECT PRIOR TO INSTALLATION.

D. PROVIDE CONSTRUCTION FILTERS IN ALL HVAC DUCT OPENINGS IN THE RENOVATED AREA TO KEEP FROM CONSTRUCTION DUST AND DEBRIS FROM GETTING BACK INTO THE AIR HANDLING UNIT. CONSTRUCTION FILTERS SHALL BE INSPECTED AND REPLACED WHEN DIRTY.

E. LOCATE VOLUME DAMPERS IN ACCESSIBLE CEILING. IN AREA WITH ACCESSIBLE CEILING, POSITION DAMPER HANDLE/OPERATOR ON THE BOTTOM OR WHICHEVER SIDE OF DUCT THAT IS CLEAR OF ABOVE CEILING OBSTRUCTIONS, AND AT ELEVATION SUCH THAT DAMPER IS WITHIN REACH.

F. ALL DUCT AND PIPE PENETRATIONS THRU EXTERIOR WALLS SHALL MATCHED EXISTING WALL COLOR AND BE CAULK AND SEAL AIRTIGHT WITH WATER PROOF SEALANT. ALL DUCT AND PIPE PENETRATIONS THRU FIRE / SMOKE RATED WALLS SHALL BE FIRE CAULKED AIRTIGHT TO PRESERVE THE WALL RATINGS.

G. PROVIDE MINIMUM 6" WIDE FLEXIBLE CONNECTION TO CONNECT DUCT TO EQUIPMENT OPENING.

H. PROVIDE TURNING VANES IN ALL ELBOW DUCT FITTINGS.

I. PROVIDE CONICAL FITTINGS AT TAKE OFF OF BRANCH DUCT. STRAIGHT TAP IS NOT ACCEPTABLE. IF CONICAL FITTING IS WIDER THAN MAIN DUCT, PROVIDE FLEXMASTER EXPANDED SIDE TAKE OFF, STO, FITTING

J. SIZE REFRIGERANT PIPING IN ACCORDANCE WITH MANUFACTURER'S RECOMMENDATION. NOTICE THAT THE SIZE OF PIPE CONNECTIONS AT THE UNITS ARE NOT INDICATIVE OF PIPE SIZES THRU-OUT THE DEVELOPED LENGTH.

K. PROVIDE MILCOR OR EQUAL ACCESS DOORS FOR ACCESS TO ALL DAMPERS, OR OTHER DEVICES REQUIRING ATTENTION. DOORS SHALL MATCH WALL OR CEILING RATING. ARCHITECT MUST APPROVE LOCATION AND APPEARANCE OF ALL ACCESS DOORS.

L. COORDINATE ALL WORK WITH THE BUILDING MANAGER AND BUILDING ENGINEER. ALL WORKS SHALL BE DONE ACCORDING TO THE BUILDING STANDARD.

M. ALL OTHER AREAS OF THE FLOOR NOT WITHIN THE SCOPE OF WORK SHALL REMAIN UNCHANGED.

N. COORDINATE WITH STRUCTURAL ENGINEER AND ARCHITECT TO SECURE ROOF MOUNTED EQUIPMENT TO STRUCTURE AGAINST HURRICANE FORCE WINDS.

O. ALL WORK SHALL BE PERFORMED IN A CLEAN AND WORKMANLIKE MANNER. CARE SHALL BE EXERCISED TO MINIMIZE ANY INCONVENIENCE OR DISTURBANCE TO OTHER AREAS OF THE BUILDING WHICH ARE TO REMAIN IN OPERATION. ISOLATE WORK AREAS BY MEANS OF TEMPORARY PARTITIONS AND/OR TARPS TO KEEP DUST AND DIRT WITHIN THE CONSTRUCTION AREA.

P. CLEAN THE JOB SITE DAILY AND REMOVE FROM THE PREMISES ANY DIRT AND DEBRIS CAUSED BY THE PERFORMANCE OF THE WORK INCLUDED IN THIS CONTRACT.

Q. THE CONTRACTOR SHALL BE RESPONSIBLE FOR THE SAFEKEEPING OF HIS OWN PROPERTY ON THE JOB SITE. OWNER ASSUMES NO RESPONSIBILITY FOR PROTECTION OF PROPERTIES AGAINST FIRE, THEFT AND ENVIRONMENTAL CONDITIONS.

R. PROVIDE ALL NECESSARY TEMPORARY OR PERMANENT CAPS OR PLUGS FOR PIPING. DO NOT LEAVE PIPING OPEN ENDED.

S. WHERE USED, THE TERM "PROVIDE" SHALL MEAN "FURNISH AND INSTALL".

T. ALL WORK SHALL CONFORM TO ALL STATE AND LOCAL CODES, RULES AND REGULATIONS AND ORDINANCES.

U. CONTRACTOR SHALL SECURE AND PAY ALL FEES AND PERMITS PERTAINING TO THE CONTRACT.

V. ALL EQUIPMENT SHALL BE INSTALLED IN STRICT COMPLIANCE WITH THE MANUFACTURER'S WRITTEN INSTRUCTIONS. THE CONTRACTOR SHALL PROVIDE ALL HANGERS AND SUPPORTS REQUIRED FOR A COMPLETE INSTALLATION.

W. CONTRACTOR SHALL BE RESPONSIBLE FOR WORKMEN'S IDENTIFICATION AND BADGING, SAFETY AND FIRE PROTECTION, CONTRACTOR'S LIABILITY INSURANCE, BARRICADES, WARNING SIGNS, TRASH REMOVAL, CUTTING AND PATCHING.

X. NO PIPING, EQUIPMENT, ETC. SHALL BE REMOVED, DISCONNECTED OR SHUT DOWN WITHOUT PRIOR REVIEW WITH THE LANDLORD AND/OR ENGINEER TO CONFIRM THAT AREAS TO REMAIN IN OPERATION WILL NOT BE AFFECTED. IF ANY AREAS NOT WITHIN THE SCOPE OF WORK ARE AFFECTED BY ANY SHUTDOWN, REMOVAL OR DISCONNECTION, SUFFICIENT ADVANCE NOTICE MUST BE GIVEN TO THE LANDLORD INDICATING WHICH AREAS WILL BE AFFECTED, WHEN THE PROPOSED SHUTDOWN WILL OCCUR, AND FOR HOW LONG A PERIOD OF TIME.

Y. THIS CONTRACTOR SHALL FIELD VERIFY ALL DIMENSIONS AND EXISTING CONDITIONS PRIOR TO PROCEEDING WITH ANY WORK. WHERE DISCREPANCIES OCCUR BETWEEN THESE DOCUMENTS AND EXISTING CONDITIONS, THE DISCREPANCY SHALL BE REPORTED TO THE LANDLORD AND/OR ENGINEER FOR EXPEDITING AND THE RESOLUTION.

Z. EXISTING MATERIALS THAT ARE REMOVED SHALL NOT BE REUSED IN NEW SYSTEMS, EXCEPT WHERE INDICATED AS BEING RELOCATED.

ELECTRIC FAN TYPE UNIT HEATER SCHEDULE
PROJECT: TAKE 5 OIL

TAG	EH-1	EH-2	EUH-1 & 2
TYPE	WALL	WALL	CEILING
LOCATION	TOILET	STORAGE	SERVICE BAYS
HEATER SIZE	1.0 KW	2.0 KW	6.7 KW
HEATER STAGE	1	1	2
FAN HP	---	---	---
DISCHARGE AIR CFM	65	65	641
DISCHARGE AIR TEMP. RISE, °F	49	97	33
VOLT/PH/CYCLE	120/1/60	240/1/60	240/1/60
FLA	8.4	8.4	28.6
UNIT WEIGHT, LBS.	10	10	40
MOUNTING HT., FT.	24"	24"	NOTE 2
MANUFACTURER	QMARK	QMARK	INDEECO
MODEL OR EQ.	CWH1101DSAF	CWH1202DSAF	UHIR 240-U2067J
NOTES	1	1	2

1. FEATURES: HEAVY GAUGE GALV STEEL BACK BOX FOR RECESS MOUNTING, NON-GLOWING HEATING ELEMENT, ELECTRIC AUTOMATIC FAN WITH MANUAL-RESET THERMAL CUTOUT, DISCONNECT SWITCH, LOUVER FRONT COVER WITH STEEL GRILLE AND POLYESTER POWDER COAT FINISH,
2. ACCESSORIES: "P" HEATER-ON PILOT LIGHT; "S1" SUMMER FAN SWITCH; INDEECO REMOTE THERMOSTAT; HORIZONTAL DUST SHIELD. THREADED RODS FOR SUSPENDED INSTALLATIONAT 12'-0".

FAN SCHEDULE
PROJECT: TAKE 5 OIL

TAG	EF-1	EF-2	EF-3	CF-1, 2
SERVICE	EXHAUST	EXHAUST	EXHAUST	CIRCULATION
AREA SERVED	TOILET	BACK ROOM	MEZZANINE	SHOP
FAN TYPE	CENTRIFUGAL	CENTRIFUGAL	PROPELLER	PROPELLER
AIR FLOW (CFM)	75	150	600	6,000 APPROX
EXT. STATIC PRES (IN. WG)	0.375	0.375	0.125	-----
DRIVE	DIRECT DRIVEN	DIRECT DRIVEN	DIRECT DRIVEN	DIRECT DRIVEN
MOTOR DATA- HP	17 W	23 W	1/4	1/4
VOLTS/PH/CYCLES	115/1/60	115/1/60	115/1/60	115/1/60
FACTORY DISCONNECT	YES	YES	YES	NO
BACK DRAFT DAMPER	DISCHARGE	DISCHARGE	WALL	NO
MOUNTING	SUSPENDED	SUSPENDED	WALL HOUSING	WALL MOUNTED
FAN SPEED SWITCH	ECM	ECM	ECM	YES
MANUFACTURER	GREENHECK	GREENHECK	GREENHECK	GREENHECK
MODEL	SP-A390-VG	SP-A390-VG	AER-20-03-0610-VG	ICO-20-B4-J1
NOTES	1,2,3	1,2,4	2,4,6	2,5
ACCESSORIES	A,B	A,B	D	C

ACCESSORIES:
A. PROVIDE WALL LOUVER WITH BIRDSCREEN, GRAVITY DAMPER, SUITEABLE FOR 10"x10" DUCT, BROAN 441 OR EQUAL.
B. PROVIDE VIBRATION ISOLATION KIT FOR SUSPENDED INSTALLATION.
C. WALL/POST BRACKET
D. WALL COLLAR FLUSH TO EXTERIOR WITH OSHA MOTOR GUARD

NOTES:
1. CABINET FAN SHALL HAVE CORROSION RESISTANT GALVANIZED HOUSING, BACKDRAFT DAMPER AT FAN DISCHARGE VARI GREEN DIRECT DRIVEN ECM MOTOR WITH POTENTIOMETER DIAL PRE-MOUNTED ON MOTOR FOR SPEED CONTROLLER.
2. UL LISTED FAN BEARING AMCA LABEL.
3. PROVIDE WALL-MOUNTED TIMER SWITCH IN TOILET. PROGRAM TIMER TO RUN FAN DURING OPERATION HOURS.
4. PROVIDE WALL-MOUNTED TIMER SWITCH IN THE FAN RESPECTIVE ROOM. PROGRAM TIMER TO RUN FAN DURING OPERATION HOURS.
5. OSCILLATING DIRECT DRIVEN, TWO-SPEED, THRE-BLADED ALUMINUM FAN. OSHA COMPLIANT POLYESTER POWDER COATED WIRE GUARD, TOTALLY ENCLOSED MOTOR, 10 FT. POWER CHORD, 2-SPEED CHAIN SWITCH FOR OFF-LOW-OFF-HIGH OPERATION. MAXIMUM AMBIENT TEMPERATURE 104°.
6. GALVANIZED PANEL WITH CAST ALUMINUM BLADES STATICALLY AND DYNAMICALLY BALANCED. PERMANENTLY LUBRICATED MOTOR.

DX DUCTLESS SPLIT SYSTEM SCHEDULE
PROJECT: TAKE 5 OIL

AIR HANDLER	FCU-1	FCU-2
TYPE	DUCTLESS WALL MTD.	DUCTLESS WALL MTD.
SERVES	WAITING	OFFICE
DISCHARGE CONFIGURATION	HORIZONTAL	HORIZONTAL
RETURN CONFIGURATION	BOTTOM	BOTTOM
FAN DATA		
SUPPLY CFM	320	320
EXTERNAL STATIC PRESSURE, "WG	———	———
EVAP FAN HORSEPOWER (HP)	38 W	38 W
OUTSIDE AIR CFM	———	———
COOLING COIL	DX	DX
AIR ENT EVAP, DB/WB °F	80 / 67 (ARI)	80 / 67 (ARI)
AIR LVG EVAP, DB/WB °F	56 / 55	56 / 55
SENSIBLE BTUH	8040	8040
NOMINAL CAPACITY AT ARI CONDITION, BTUH	10200	10200
MIN COOLING STAGES	1	1
HEATING COIL	DX	ELECTRIC
AIR ENT DB TEMPERATURE °F	70 / 60	70 / 60
HEATING CAPACITY (BTUH)	13000	13000
CONTROL STAGES	1	1
UNIT DATA & ACCESSORIES		
EER / IPLV	19 SEER/12.5 EER/10 HSPF	19 SEER / 12.5 EER / 10 HSPF
VOLTS/PH/HZ	208-230/1/60	208-230/1/60
AHU FULL LOAD AMPS (FLA)	0.3	0.3
MAXIMUM OVERCURRENT PROTECTION	CONNECTED TO OUTDOOR	CONNECTED TO OUTDOOR
UNIT MTD. ELECTRICAL DISCONNECT-FACTORY	YES	YES
FILTERS	1/2" DISPOSABLE	1/2" DISPOSABLE
MOUNTING	WALL MOUNTED	WALL MOUNTED
CONDENSING UNIT	CU-1	CU-2
LOCATION	GRADE	GRADE
COOLING AMBIENT TEMP, °F	95	95
OPERATES DOWN TO ,°F	47	47
CU FULL LOAD AMPS (FLA)	8.7	8.7
CU MAXIMUM OVERCURRENT PROTECTION	15	15
VOLTS/PH/HZ	208-230/1/60	208-230/1/60
MANUFACTURER OR EQUAL	DAIKIN	DAIKIN
AHU MODEL NUMBER OR APPROVED EQUAL	FTX09AXVJU	FTX09AXVJU
AIR HANDLER APPROXIMATE UNIT WEIGHT	20 LBS	20 LBS
CU MODEL NUMBER OR APPROVED EQUAL	RX09AXVJU	RX09AXVJU
UNIT MTD. ELECTRICAL DISCONNECT	YES	YES
CU APPROXIMATE UNIT WEIGHT	60 LBS	60 LBS
NOTE REFERENCE	1,2,3,4,5,6,7,8,9,10	1,2,3,4,5,6,7,8,9,10

NOTES
1. PROVIDE ENERGY STAR LABELED PROGRAMMABLE THERMOSTAT.
2. INCLUDE ALL APPURTENANT ACCESSORIES FOR PROPER INSTALATION.
3. CONFORM TO THE LOCAL ADOPTED IECC AND AMENDMENTS.
4. PROVIDE ANTI-SHORT CYCLE KIT AND TIME DELAY RELAY.
5. PROVIDE FAN COIL WITH HI/MED/LO FAN SPEED.
6. INDOOR UNIT RECEIVES POWER FROM OUTDOOR UNIT. PROVIDE FIELD INSTALLED INTERCONNECTED WIRING KIT. SPLIT SYSTEM SHALL HAVE SINGLE POINT CONNECTION.
7. EQUIPMENT SHALL MEET ENERGY STAR REQUIREMENTS.
8. PROVIDE HANGER BRACKETS FOR INDOOR UNIT AND CONCRETE SUPPORTING PAD FOR OUTDOOR UNIT. SECURE OUTDOOR UNIT TO PAD TO PREVENT DISLOCATING.
9. PROVIDE CONDENSATE PUMP INTEGRAL TO FAN COIL UNIT.
10. PROVIDE NON-HCFC REFRIGERANT (R410A) AND PROOF OF PROPER REFRIGERANT CHARGE.

Watson Consulting Engineers, PLLC
P.O. BOX 721206
Houston, Texas 77272
(832) 860-5237
ctang@watsonengineers.com
TEXAS FIRM REG#: 17751

ALTAR GROUP
ARCHITECTURE ENGINEERING

SEAL:
STATE OF TEXAS
CHAU THANH N. TANG
83415
LICENSED
PROFESSIONAL ENGINEER
02/21/25

CONSULTANTS:

TAKE 5 OIL CHANGE
PROTOTYPE: 3 BAY
5331 WALZEM ROAD
SAN ANTONIO, TX 78218

REV	DATE	DESCRIPTION
1	11/28/24	ISSUE FOR PERMIT
2	02/21/25	RE-ISSUE FOR PERMIT

DRAWN BY:
CHECKED BY:
ARCH. PROJECT NO.: DB24-023
SHEET NAME: MECHANICAL PLAN
SHEET NUMBER: M-101

File Name: C:\Users\chaut\appdata\local\temp\AcPublish_26516\202411-043 T50 SA 6630 WALZEM_24-023 MP.DWG
User: chaut
Date/Time: Feb 21, 2025 - 12:18pm
Xref File(s): (DIESEL evaluation failed)

IN case of conflicts between drawing notes and specifications, request clarification in writing from the Architect. Otherwise, the more stringent requirements shall be provided.

HVAC DESIGN CRITERIA
AVERAGE INDOOR TEMPERATURE (OFFICE): 75ºF COOLING; 73ºF HEATING

HUMIDITY CONTROL: THIS PROJECT HAS NO DIRECT CONTROL OF HUMIDITY

OUTDOOR DESIGN CONDITIONS (**SAN ANTONIO, TEXAS**) PER ASHRAE 2021+
FUNDAMENTAL VOLUME CH. 14 CLIMATIC DESIGN DATA:
- 99.3ºF DB, 73.6ºF WB SUMMER. ,4%; 30ºF DB WINTER, 99.6%
- 3270 DEGREE DAYS COOLING; 1352 DEGREE DAYS HEATING
- CLIMATE ZONE 2A

CODE INFORMATION:
APPLICABLE CODES INCLUDE BUT ARE NOT LIMITED TO:
CITY OF SAN ANTONIO BUILDING CODE: 2021 IBC, AMENDED
CITY OF SAN ANTONIO MECHANICAL CODE: 2021 IMC, AMENDED

CITY OF SAN ANTONIO COMMERCIAL ENERGY CONSERVATION CODE: AMENDED

FIRE DAMPERS AND SMOKE DAMPERS SHALL BE INSTALLED IN THE RATED ASSEMBLIES AS FOLLOWED. REFER TO ARCHITECTURAL DESIGN FOR TYPES AND LOCATIONS OF THE RATED ASSEMBLIES. REFER TO THE MECHANICAL DRAWINGS FOR LOCATIONS AND SIZES OF DUCT PENETRATIONS.
FIRE AND SMOKE DAMPER REQUIREMENTS (PER CITY SAN ANTONIO 2021 IBC):

FIRE WALLS: FIRE DAMPER REQUIRED, IN ADDITION,
1. SMOKE DAMPER REQUIRED IN FIRE WALL THAT SERVES AS HORIZONTAL EXIT.

FIRE BARRIERS: FIRE DAMPER REQUIRED.
EXCEPTION 1: PENETRATIONS ARE TESTED AS PART OF FIRE RESISTANCE RATED ASSEMBLY IN ACCORDANCE TO ASTM E119 OR UL 263.
EXCEPTION 2: FIRE DAMPERS ARE NOT REQUIRED IN SMOKE CONTROL SYSTEMS.
EXCEPTION 3: FIRE DAMPERS NOT REQUIRED IN SPRINKLERED BLDG OTHER THAN GROUP H PENETRATED BY DUCTED HVAC SYSTEM
IN ADDITION, SMOKE DAMPER REQUIRED IN FIRE BARRIER THAT SERVES AS HORIZONTAL EXIT. NO EXCEPTION.

FIRE PARTITIONS: FIRE DAMPER REQUIRED
EXCEPTION 1: FIRE DAMPER NOT REQUIRED IN SPRINKLERED BLDG OTHER THAN GROUP H FOR CORRIDOR WALLS WHERE DUCT THROUGH PENETRATIONS AREA PROTECTED ACCORDING TO SECTION 714.
EXCEPTION 2: FIRE DAMPER NOT REQUIRED IN SPRINKLERED BLDG OTHER THAN GROUP H FOR TENANT PARTITION IN MALL BUILDINGS WHERE THE WALLS ARE NOT REQUIRED TO EXTEND TO THE UNDERSIDE OF FLOOR OR DECK ABOVE.
EXCEPTION 3: FIRE DAMPER NOT REQUIRED IN BUILDINGS OF OTHER THAN GROUP H WHERE DUCT PENETRATION IS LIMITED TO 100 SQUARE INCHES; IS OF MINIMUM 0.0217- INCH STEEL; DOES NOT HAVE COMMUNICATING OPENINGS BETWEEN A CORRIDOR AND ADJACENT SPACES; IS INSTALLED ABOVE A CEILING , AND DOES NOT TERMINATE AT A WALL REGISTER OF THE FIRE-RESISTANCE-RATED WALL.

SMOKE BARRIERS: SMOKE DAMPER REQUIRED
EXCEPTION: SMOKE DAMPER NOT REQUIRED IN STEEL DUCTS LIMITED TO A SINGLE SMOKE COMPARTMENT.

FLEXIBLE DUCTS AND AIR CONNECTORS NOT ALLOWED TO PASS THRU FIRE-RATED ASSEMBLY.

THIS PROJECT SHALL COMPLY WITH THE LOCAL ENERGY CODE, INCLUDING BUT NOT LIMITED TO THE FOLLOWING ENERGY CODE SECTION. ALL EQUIPMENT PROVIDED SHALL COMPLY WITH THE ENERGY CODE REQUIREMENT IN THIS SECTION:

2021 IECC ENERGY CODE
SAN ANTONIO IS ZONE 2A WARM-HUMID

C403.1.1 Calculation of heating and cooling loads. Engineer has performed HVAC load calculations using Elite.

C403.3.1 Equipment and system sizing. Heating and cooling equipment and systems capacity shall not exceed the loads calculated in accordance with Section C403.2.1.
C403.3.2 HVAC equipment performance requirements. Equipment shall meet the minimum efficiency requirements of Tables C403.3.2(1)-(9).
C403.4 HVAC system controls. Each heating and cooling system shall be provided with thermostatic controls
C403.4.1 Thermostatic controls. The supply of heating and cooling energy to each zone shall be controlled by individual thermostatic controls capable of responding to temperature within the zone. Where humidification or dehumidification or both is provided, at least one humidity control device shall be provided for each humidity control system.

C403.4.1.2 Deadband. Where used to control both heating and cooling, zone thermostatic controls shall provide a temperature range or deadband of at least 5°F within which the supply of heating and cooling energy to the zone is capable of being shut off or reduced to a minimum.
Exception: 1.Thermostats requiring manual change-over between heating and cooling modes. 2. Occupancies or applications requiring precision indoor temperature control as approved by the code official.

C403.4.1.3 Set point overlap restriction. Where a zone has a separate heating and a separate cooling thermostatic control located within the zone, a limit switch, mechanical stop or DDC system with software shall be provided to prevent the heating set point from exceeding the cooling set point and to maintain a deadband in accordance with C403.2.4.1.2.

C403.4.2 Off-hour controls. Each zone shall be provided with thermostatic setback controls that are controlled by either an automatic time clock or programmable control system.
Exceptions: 1. Zones that will be operated continuously. 2. Zones with a full HVAC load demand not exceeding 6,800 Btu/h and having a readily accessible manual shutoff switch.

C403.4.2.1 Thermostatic setback capabilities. Thermostatic setback controls shall have the capability to set back or temporarily operate the system to maintain zone temperatures down to 55°F or up to 85°F.

C403.4.2.2 Automatic setback and shutdown capabilities. Automatic time clock or programmable controls shall be capable of starting and stopping the system for seven different daily schedules per week and retaining their programming and time setting during a loss of power for at least 10 hours. Additionally, controls shall have a manual override that allows temporary operation of the system for up to 2 hours; a manually operated timer capable of being adjusted to operate the system for up to 2 hours; or an occupancy sensor.

C403.4.2.3 Automatic start/stop capacities. Automatic start controls shall be provided for each HVAC system. The controls shall be capable of automatically adjusting the daily start time of HVAC system in order to bring each space to the desired occupied temperature immediately prior to scheduled occupancy. Automatic stop controls shall be provided for each HVAC system with DDC of individual zones. The automatic stop controls shall be configured to reduce the HVAC system's heating temperature setpoint and increase the cooling temperature setpoint by not less than 2°F before scheduled unoccupied periods based on the thermal lag and acceptable drift in space temperature that is within comfort limits.

C403.7.7 Shutoff damper controls. Outdoor air intake and exhaust openings and stairway and shaft vents shall be provided with Class I motorized dampers. Dampers shall have an air leakage rate not greater than 4 cfm/ft2 of damper surface area at 1" w.g. and shall be labeled by an approved agency when tested in accordance with AMCA 500D. Outdoor air intake and exhaust dampers shall be installed with automatic controls to close when the systems or spaces served are not in use or during unoccupied period warm-up and setback operation, unless the systems served require outdoor or exhaust air in accordance with the IMC or dampers are opened to provide intentional economizer cooling. Stairway and shaft vent dampers shall be installed with automatic controls to open upon the activation of any fire alarm initiating devices of the building's fire alarm system or the interruption of power to the damper. Exceptions: (1) Gravity dampers shall be permitted in buildings less than three stories in height above grade. (2) Gravity dampers shall be permitted for buildings of any height located in climate zones 1, 2, and 3. (3) Gravity dampers shall be permitted for exhaust airflows of 300 cfm or less. Nonmotorized gravity damper shall have an air leakage rate not greater than 20 cfm/ft2 where not less than 24" and 40 cfm/ft2 where less than 24" in either dimension. The rate of air leakage shall be determined at 1" w.g. tested in accordance with AMCA 500D.

C403.12.1 Duct and plenum insulation and sealing. Supply and return air ducts and plenums shall be insulated with a minimum of R-6 insulation when located in unconditioned spaces and with a minimum of R-8 insulation when located outside the building in Climate Zones 0-4 or R-12 insulation outside in Climate Zones 5-8. Where located within a building envelope assembly, the duct or plenum shall be separated from the building exterior or unconditioned or exempt spaces by a minimum of R-8 insulation in Climate Zones 0-4 and a minimum of R12 insulation in Climate Zones 5-8. Exceptions: (1) Where located within equipment. (2) Where the design temperature difference between the interior and exterior of the duct or plenum does not exceed 15°F. All ducts, air handlers and filter boxes shall be sealed. All joints, longitudinal and transverse seams and connections in ductwork, shall be securely fastened and sealed with welds, gaskets, mastics (adhesives), mastic-plus-embedded- fabric systems or tapes, and shall comply with the IMC Section 603.9.

C403.12.2.1 Low-pressure duct systems. All longitudinal and transverse joints, seams and connections of supply and return ducts operating at a static pressure less than or equal to 2 inches w.g. shall be securely fastened and sealed with welds, gaskets, mastics (adhesives), mastic-plus-embedded-fabric systems or tapes installed in accordance with the manufacturer's installation instructions. Pressure classification specific to the duct system shall be clearly indicated on the construction documents. Exception: Locking type longitudinal joints and seams, other than the snap-locks and button-lock type, need not be sealed as specified in this section.

C403.12.3 Piping insulation. All piping serving as part of a heating or cooling system shall be thermally insulated in accordance with Table C403.12.3. Exceptions: 1. Factory-installed piping within HVAC equipment tested and rated in accordance with a test procedure referenced by this code. 2. Factory-installed piping within room fan-coils and unit ventilators tested and rated according to AHRI 440 and 840. 3. Piping that conveys fluids that have a design operating temperature range between 60°F and 105°F. 4. Piping that conveys fluids that have not been heated or cooled through the use of fossil fuels or electric power. 5. Strainers, control valves, and balancing valves associated within piping 1 inch or less in diameter. 6. Direct buried piping that convey fluids at or below 60°F. 7. In radiant heating systems, sections of piping intended b design to radiate heat.

Table C403.12.3 Minimum Pipe Insulation Thickness

Fluid Op. Temp	Insulation Conductivity Conductivity	Mean Rating Temp	Nominal Pipe/Tube Sizes <1	1-1.5	1.5- <4	4 - <8	>8
>350	0.32-0.34	250	4.5	5.0	5.0	5.0	5.0
251-350	0.29-0.32	200	3.0	4.0	4.5	4.5	4.5
201-250	0.27-0.30	150	2.5	2.5	2.5	3.0	3.0
141-200	0.25-0.29	125	1.5	1.5	2.0	2.0	2.0
105-140	0.21-0.28	100	1.0	1.0	1.5	1.5	1.5
40-60	0.21-0.27	75	0.5	0.5	1.0	1.0	1.0
<40	0.20-0.26	50	0.5	1.0	1.0	1.0	1.0

C403.12.3.1 Protection of piping insulation. Piping insulation exposed to weather shall be protected from damage, including that due to sunlight, moisture, equipment maintenance and wind, and shall provide shielding from solar radiation that can cause degradation of the material. Adhesive tapes shall not be permitted.

C403.13.3 Freeze protection system controls. Freeze protection systems, such as heat tracing of outdoor piping and heat exchangers, including self-regulating heat tracing shall include automatic controls configured to shut-off the systems when outdoor air temperatures are above 40° F or when the conditions of the protected fluid will prevent freezing.

C408.2.2.1 Air system balancing. Each supply air outlet and zone terminal device shall be equipped with means for air balancing in accordance with the requirements of Chapter 6 of the International Mechanical Code. Discharge dampers are prohibited on constant volume fans and variable volume fans with motors 10 HP and larger. Air systems shall be balanced in a manner to first minimize throttling losses then, for fans with system power of greater than 1 hp, fan speed shall be adjusted to meet design flow conditions. Exception: Fans with fan motors of 1 hp or less.

C408.2.5.2 Controls. HVAC and service water-heating control systems shall be tested to document that control devices, components, equipment, and systems are calibrated, adjusted, and operate in accordance with approved plans and specifications. Sequences of operation shall be functionally tested to document they operate in accordance with approved plans and specifications.

C408.3.2.2 Manuals. An operating and maintenance manual shall be provided and include all of the following:
1. Name and address of at least one service agency.
2. A complete written narrative of how each system is intended to operate, including recommended set points.

WIND LOAD & EQUIPMENT ANCHORAGE
THE ULTIMATE DESIGN WIND SPEED FOR THE DETERMINATION OF THE WIND LOADS SHALL BE DETERMINED BY FIGURES 1609A, 1609B, AND 1609C OF THE BUILDING CODE (2015 IBC 1609.3). EXTERIOR DUCTS SHALL BE SUPPORTED IN A LIKE MANNER.

HVAC GENERAL NOTES (APPLY TO ALL SHEETS)
- DRAWINGS ARE DIAGRAMMATIC; CONFIRM DIMENSIONS AND LOCATIONS IN THE FIELD.
- RUNOUTS TO INDIVIDUAL AIR DEVICES ARE SAME SIZE AS AIR DEVICE NECK.
- DUCT SIZES SHOWN ARE FREE AREA
- SEE ARCHITECTURAL REFLECTED CEILING PLANS FOR TYPE OF CEILING AND LOCATION OF CEILING DEVICES.
- SEE ARCH ELEVATIONS FOR LOCATION OF WALL MTD DEVICES
- PLENUMS ARE CROWDED AND NOT ALL OBSTACLES ARE INDICATED. ALLOW FOR ADDITIONAL DUCT OR PIPE OFFSETS OR TRANSITIONS NOT INDICATED ON DRAWINGS
- SEAL ALL PENETRATIONS OF FLOORS, RATED WALLS, EXTERIOR WALLS
- CONTRACTOR SHALL SUBMIT DRWGS FOR ALL PERMITS IN A TIMELY MANNER AND PAY ALL PERMIT FEES
- PROVIDE ANY REQUIRED TEMPORARY UTILITIES
- SELECT AND INSTALL ALL EQUIPMENT TO PROVIDE CLEARANCE AROUND ALL HVAC EQUIPMENT CONFORMING TO MANUFACTURER'S MINIMUM RECOMMENDED SPACE FOR MAINTENANCE AND/ OR AIR FLOW AND SUFFICIENT TO ALLOW INSPECTION, SERVICE, REPAIR OR REPLACEMENT WITHOUT REMOVING ELEMENTS OF PERMANENT CONSTRUCTION OR DISABLING THE FUNCTION OF FIRE RESISTANCE RATED ASSEMBLIES.
- DO NOT RUN DUCT OR PIPE ABOVE ELECTRICAL PANELS
- MATERIALS USED FOR THE PURPOSE OF MEP INSTALLATIONS WITHIN THE SUPPLY, RETURN, EXHAUST, AND VENTILATION PLENUMS SHALL BE NON-COMBUSTIBLE OR LISTED AND LABELED AS HAVING MAXIMUM OF 25/50 FLAME/SMOKE RATINGS. EXISTING MATERIALS THAT DO NOT HAVE PROOFS OF 25/50 RATINGS SHALL BE REPLACED.
- VISIT SITE PRIOR TO BID–NO EXTRAS WILL BE ALLOWED FOR CONDITIONS THAT COULD BE READILY OBSERVED

HVAC SPECIFICATIONS

23 05 00 BASIC MECHANICAL REQUIREMENTS
Warranty: Guarantee labor 1 year and materials for 3 years. Warranties begin upon Owner's acceptance of substantial completion of the installation. When a manufacturer offers factory warranty on equipment, such as but not limited to compressors, heaters, motors, water heater, etc., Contractor shall present the warranty information to Client (or Owner), and allow the Client the choice to reduce Contractor warranty or add the Contractor warranty on top of the factory warranty. Failure to disclose all the warranty information to the Client will automatically be Contractor's choice of providing the minimum 1 year labor warranty and 3 year part warranty regardless of the factory warranty. It is the Contractor's responsibility to inform the Client if the Contractor refuses or is unable to extend the warranty periods as indicated above. Contractor must register all warranties with equipment manufacturers immediately after purchasing equipment. If the Owner and Contractor do not have a service agreement thru the warranty period, the warranty registrations must be under the Owner's name. Failure to register the manufacturer's warranties timely shall result in Contractor providing, at no additional cost to Owner, the same warranties as the manufacturers'.
Submittals/Shop drawings: Submit complete information on all equipment, air devices, valves, duct accessories and controls. Equipment submittals shall include dimensions, weights, capacities, ratings, fan performance, electrical characteristics, required clearances, and connection requirements. Fan and pump submittals shall include computer generated fan or pump curves with performance point plotted. Submit complete ductwork and piping shop drawings, based on approved equipment and field observation of building conditions. Submit detailed layout of mechanical rooms and yards. Submit the Test, Adjust & Balance (TAB) report. The TAB report must be submitted and approved by the A/E team before final acceptance and closeout of project are allowed. All submittals and shop drawings shall be submitted by the General Contractor and bear the G.C. approval stamps indicating that the G.C. has reviewed and approved submittals from his sub-contractors. Incomplete submittals and submittals without the G.C. approval will be returned to the contractor unreviewed. No time extensions or cost increases will be allowed for delays caused by return of incomplete submittals.
Operations and maintenance instructions: Provide 3 copies of operation and maintenance manuals to Owner. Provide within 90 days after the date of system acceptance. These manuals shall be in accordance with industry-accepted standard such as ASHRAE Guideline 1 and shall include, at a minimum, the following: (a) Submittal data stating equipment size and selected options for each piece of equipment requiring maintenance. (b) Operation manuals and maintenance manuals for each piece of equipment requiring maintenance, except equipment not furnished as part of the project. Required routine maintenance actions shall be clearly identified. (c) Names and addresses of at least one service agency. (d) HVAC controls system maintenance and calibration information, including wiring diagrams, schematics, and control sequence descriptions. Desired or field-determined setpoints shall be permanently recorded on control drawings at control devices or, for digital control systems, in programming comments. (e) A complete narrative of how each system is intended to operate, including suggested setpoints. Provide instruction on system operation to Owner's representatives.
Record drawings: Within 90 days after the date of system acceptance, provide record drawings in CAD Format (using the same software and version the project was designed in), plus full size hard copy. Project designed in CAD. Electronic drawings may be available from Engineer for a fee. Record drawings shall include as a minimum the installed location and performance data on each piece of equipment, air devices, control sensors, control panels, general configuration of duct and pipe distribution system including sizes, and the terminal air or water design flow rates.
Coordination: Provide Electrical Contractor with electrical requirements of approved equipment in sufficient time to order panel boards, disconnects, etc.
Access doors: Provide *Milcor Architectural Grade Flush Door, Standard Flush Door, Universal Fire Rated Insulated Door,* or equal for access to all valves, filters, controls, dampers or other devices requiring attention. Galvanized steel in general application, stainless steel in restrooms, hospitals, and laboratories. Minimum 16-20 gauge in general application, 10 gauge minimum in vandalism application. Access doors shall match wall or ceiling fire/smoke ratings in which they are installed. Architect must approve location and appearance of all access doors. All access panels shall be lockable and shall be keyed alike (same keying as panels from other divisions).
Thru Penetrations of other than ducts such as pipes, conduits, and control wirings: Comply with the following (a), (b), or (c) part or combination thereof where applied. (a) Rated walls: All penetrations by steel or ferrous piping/conduits or by low voltage wiring in steel or ferrous conduits shall be filled with sealant capable of resisting the passage of flame and hot gases in ASTM E119 or UL 263 fire-temperature conditions under a minimum positive pressure differential of 0.01" w.g. for the time period equivalent to the fire resistance rating of the construction rated. Provide firestop systems installed per ASTM E814 or UL 1479 with a minimum positive pressure differential of 0.01" w.g. and an F rating not less than the wall/ceiling assembly fire resistive rating for all low voltage wiring not in ferrous or steel conduits. Sleeves thru rated walls does not qualify as firestop systems. Multiple wires and cables may share a common firestop system provided proper separation is maintained between communication cables and electrical wiring per electrical specification. Non-ferrous piping/conduits thru rated walls shall be installed at penetrations by firestop systems. (b) Non-rated walls: All low voltage wiring shall be provided metal sleeves through walls. All non-ferrous piping/conduits shall be provided with metal sleeves in penetrations. (c) The annular space around through-penetrations of exterior walls and roofs shall be sealed airtight with weather proof sealant.
Trenching Requirements: Refer to Texas Health and Safety Code for requirements applicable to trench safety. It is the responsibility of the Contractor to assure compliance with applicable state and federal laws, and no provision of these drawings or specifications shall be deemed to excuse compliance with applicable state and federal requirements for trench safety

23 05 03 PIPES FOR HVAC PIPING AND EQUIPMENT
Air vents at high points; drains at low points. Provide dielectric unions between dissimilar metals.

HVAC condensate drains: Inside building use insulated copper or galvanized steel in environmental air plenums. Inside (but not in environmental air plenums) may use insulated PVC. Outside building, use uninsulated UV-resistant PVC. Slope to outlet min 1/8" per foot. Provide trap (unless HVAC unit is internally trapped) and clean out plugs. Size condensate drain per applicable code; size shall not be less than outlet size of unit or less than 3/4 inches. Discharge condensate to an approved location inside or outside building. Do not discharge into a gutter system if that gutter discharges onto a public walk or street.

Refrigerant piping for DX split system - Refer to Spec Section 23 23 00.

Refrigerant relief - schedule 40 ASTM A 53 black steel or copper, 150 psi.

Steel Joints: Threaded for pipe 2 inches and smaller, welded for pipe 2-1/2" and larger, or roll-grooved (do not use cut-groove). Welded joints will be full circle butt-weld joints to ANSI/ASME B31.9 latest edition. No other welded joints will be allowed. Backing rings are not allowed. Joints: grooved mechanical couplings meeting ASTM F 1476, housing clamps ASTM A395/A395M and ASTM A536 ductile iron, compatible with steel piping sizes, rigid type, elastomer gasket for operating temperature from -30° F - 230° F, including steel bolts, nuts, and washers.

Steel fittings: ASME B16.3, malleable iron or ASTM A234/A234M, forged steel welding type. Thread-o-lets, Weld-o-lets, grooved fittings also allowed.
Couplings, Caps, Plugs: ANSI Class 3000, ASTM 181 Class 70, ANSI B16.11.
Nipples for Drains, Vents, Gauges: Sch 80, ASTM A53 Grade B seamless.
Unions: ANSI Class 3000, forged steel, steel-to-steel ground joints, ASTM 105.
Flanges: ASTM A105, flat face ANSI Class 150. Bolts and Nuts: Stud bolts, carbon steel, semi-finished with heavy hex nuts. ASTM A307 Grade B. Gaskets: Full face, red rubber or inorganic fiber (non-asbestos) gasket, ANSI B16.21.

Copper pipe fittings: ASME B16.18, cast brass, or ASME B16.22 solder wrought copper. Tee Connections: Mechanically extracted collars with notched and dimpled branch tube. Joints: Solder, lead free, ASTM B32, 95-5 tin-antimony, or tin and silver, with melting range 430 to 535 degrees F. Braze, AWS A5.8 BCuP silver/phosphorus/copper alloy with melting range 1190 - 1480 degrees F.

23 05 13 COMMON MOTOR REQUIREMENTS FOR HVAC EQUIPMENT
Test motors in accordance with NEMA MG 1, including winding resistance, no-load speed and current, locked rotor current, insulation high-potential test, and mechanical alignment tests. Install securely on firm foundation. Mount ball bearing motors with shaft in any position. Install engraved plastic nameplates. Ground and bond motors.

Single-Phase Motors: Permanent split-capacitor type, where available; otherwise, use split-phase start/capacitor run or capacitor start/capacitor run motor. Terminal lugs to match branch circuit conductor quantities, sizes and materials.

Three-Phase Motors: NEMA MG 1, Design B, Premium -efficiency squirrel-cage induction motor, with windings to accomplish starting methods and number of speeds indicated. Service Factor: 1.15 unless otherwise indicated on Drawings. Enclosure: Meet conditions of installation unless specific enclosure is specified or indicated. Design for continuous operation in 40 degrees C environment, with temperature rise in accordance with NEMA MG 1 limits for insulation class, service factor, and motor enclosure type. Insulation System: NEMA Class F . Motor Frames: NEMA Standard T-Frames of steel, aluminum, or cast iron with end brackets of cast iron or aluminum with steel inserts. Thermistor System (Motor Frame Sizes 254T and Larger): Three PTC thermistors embedded in motor windings and epoxy encapsulated solid state control relay with wiring to terminal box. Bearings: Grease lubricated anti-friction ball bearings with housings equipped with plugged provision for relubrication, rated for minimum ABMA 9, L-10 life of 200,000 hours. Calculate bearing load with NEMA minimum V-belt pulley with belt center line at end of NEMA standard shaft extension. Stamp bearing sizes on nameplate. Sound Power Levels: Conform to NEMA MG 1. Terminal lugs to match branch circuit conductor quantities, sizes and materials.

23 05 23 VALVES FOR HVAC PIPING
Ball valves: Nibco Scott 580 NIB SEAL or eq. two piece, fullport, bronze body, stainless steel trim, memory stop, insulated handle.

23 05 29 HANGERS AND SUPPORTS FOR HVAC PIPING & EQUIPMENT
Pipe, duct and equipment hangers and supports shall be per the local code. Support piping at a minimum every 10' or less for 1" and larger pipe, every 6' on 3/4" or smaller. With copper pipe use copper hangers or tape at contact point.

Support flex ducts per manufacturer's installation instructions, but no more than 4 ft, maximum spacing using 1.5" wide galvanized steel straps. (Provide instructions for inspector review). Reducing spacing distance of flexible duct supports to prevent sagging no more than ½" per foot between supports.

Ducts on attic platforms shall be supported by Mifab telescopic crossbeam duct support system, DSAW series or approved equal.

Provide concrete or prefabricated pads for all ground mounted equipment. DX condensing unit concrete pad shall be 4" high, and extend at least 3" beyond submitted unit footprints.
Flash and seal equipment and pipe stacks.
Pad thicknesses shall be sufficient to allow required condensate drain trap depth.

23 05 48 VIBRATION AND SEISMIC CONTROLS FOR HVAC PIPING & EQUIPMENT
Air handlers, furnaces, fans and fan coils shall be suspended or supported with spring isolator unless internally isolated.
Provide flexible duct connections at all air handlers, rooftop units and fans, unless internally isolated.

23 05 53 IDENTIFICATION FOR HVAC PIPING & EQUIPMENT
Equipment: Permanent label (stencil, metal tag or engraved plastic) with unit tag or name and area or space served.
Piping: Provide pipe markers every 20 feet. Identify service and flow direction. Install in clear view and align with axis of piping.
Fire damper access doors: See fire damper specifications.
Ceiling tacks: Provide ceiling tacks to locate valves or dampers above T-bar type panel ceilings. Locate in corner of panel closest to equipment. Color code: equipment: Yellow. Fire dampers/smoke dampers: Red. Valves: Blue.
Valve tags: Install engraved metal tags with corrosion resistant chain. Number tags consecutively by location. Tag Chart: Typewritten letter size list in anodized aluminum frame or plastic laminated.
Underground pipes: provide warning tape above pipe for entire length. For non-metallic pipes provide traced wire above and parallel to entire length and stubbed out above grade at one end.

23 05 93 TESTING, ADJUSTING AND BALANCING (TAB) FOR HVAC
Balance shall be by an independent air balance contractor that is hired by the Mechanical Contractor; but, is not an affiliate of the mechanical contractor.

Balance in accordance with NEBB Procedural Standards -1999 Procedural Standards for Building Systems, or AABC 2002 Associated Air Balance Council Test and Balance Procedures.

Adjust system to achieve air quantities shown on the drawings, including but not limited to air handling unit supply, return, air quantities of all supply/exhaust fan. Mark setpoints on all dampers and valves. Return to project at 1 and 3 month intervals after completion to make balance adjustments in response to Owner's perceived comfort. Perform operational test on all smoke and combination fire/smoke dampers after the HVAC system has been balanced.

Submit report (NEBB or AABC format). Include:
General data: Nameplate data on all equipment. Outside air temp; and actual room temperatures and humidities vs. setpoints
Fans: Volume and static pressure; fan rpm and amps
DX air handlers, fan coils or furnaces: supply and return air temp, volume and static pressure; fan rpm and amps. Outside air cfm.
DX condensing units: Condensing air temp, units amps

Air systems shall be balanced in a manner to first minimize throttling losses. Then, for fans with fan system power greater than 1 HP, fan speed shall be adjusted to meet design flow conditions.

HVAC control systems shall be tested to ensure that control elements are calibrated, adjusted, and in proper working condition. Submit test documentation.

23 07 01 PIPING INSULATION
Pipe insulations, mastics and jackets located in environmental air plenums shall have maximum flame spread index of 25 and maximum smoke developed index of not exceeding 50 in accordance with ASTM E84.

Minimum Required Pipe Insulation Thickness based on 2015 IECC:

Fluid Temp	Conductivity	Mean Temp <1	Nominal Pipe Size 1 to < 1.5	1.5 to < 4	4 to <8
141-200	0.25-0.29	125	1.5	2.0	2.0
105-140	0.21-0.28	100	1.0	1.5	1.5
40-60	0.21-0.27	75	0.5	1.0	1.0
<40	0.20-0.26	50	0.5	1.0	1.0

Primary condensate drains inside buildings- 3/4" Armaflex for entire length. No insulation required outdoors.
Insulation of secondary (overflow) condensate drains not required.

Refrigerant suction piping: 1" Armaflex. Paint outdoor portions with manufacturer's recommended water retardant ultraviolet solar radiation protective coating.

At locations, size and spacings recommended by insulation manufacturer, provide: a) galv. steel shield between outside of pipe jacket and pipe support ; b) insert of compression resistant insulating material between support shield and piping and under finish jacket.

23 07 02 EQUIPMENT INSULATION
Flame spread less than 25, smoke developed less than 50 as per ASTM E84, NFPA 255, UL273.

23 07 03 DUCTWORK INSULATION
Flame spread less than 25, smoke developed less than 50 as per ASTM E84, NFPA 255, UL273. Minimum required installed R values for non-residential projects (excluding film resistance) are:

1. On roof or elsewhere on bldg. exterior: In climate zones 1-4, Supply R8; Return R8; Exhaust or relief-none required; Conditioned outside air R8.
2. Within the conditioned space: Supply R6; Return -none required; Exhaust or relief: none required; Conditioned outside air R6
3. In return air plenums (inside bldg insulation envelope): Supply R6; Return-none required; Exhaust or relief: none required; Conditioned outside air R6
4. In shafts, plenums or furr-downs not used for return air (but inside bldg insulation envelope): Supply R6; Return R6; Exhaust or relief: R6; Conditioned outside air R6
5. In non-conditioned attics, garages or crawl spaces (i.e. outside the bldg envelope insulation): Supply R8; Return R8; Exhaust or relief: R6; Conditioned outside air R8

External duct wrap: foil face rigid or flexible fiberglass with vapor retarder. R value stenciled on outside. ASTM A96 Water Vapor Permeance: 0.5 perms maximum. Mold Growth per ASTM C1338- No Growth. GREENGUARD Environmental Institute Certified. Vapor Retarder Jacket conforming to ASTM C 1136 Type II: Foil Scrim Kraft (FSK), or White polypropylene- scrim-kraft (PSK). 2" Staple flange on longitudinal seam. Adhere to duct with vapor barrier type adhesive. Overlap all joints. Cover all joints or breaks with glass fab imbedded in vapor barrier mastic.

Insulate backs of supply diffusers when in attics or when ceiling plenum is not used for return air.

Internal liners- see section 23 31 00.

23 09 23 ELECTRIC CONTROLS FOR HVAC
Electric, programmable multistage thermostats, automatic changeover, battery backup. Train the Owner to operate thermostats.
1. For fan coil ductless units: Manufacturer controllers provided with fan coil units.
2. For unit heaters: Honeywell T451 series or equal. Unit heater thermostat shall have voltage rating matching the associated equipment and is applicable to control electric heating equipment. Thermostat shall make on temperature fall and break on temperature rise.
3. For cooling fans: Honeywell T4051B or T651A series or equal. Cooling fan thermostat shall have voltage rating matching the associated equipment and is applicable to control cooling fan equipment. Thermostat shall make on temperature rise and break on temperature fall.

23 09 93 SEQUENCES OF OPERATION

1. ALL SYSTEMS
   a. **Dead Bands:** Where used to control both heating and cooling, automatic changeover zone thermostatic controls shall be capable of providing a temperature range or dead band of at least 5°F within which the supply of heating and cooling energy to the zone is shut off or reduced to a minimum. Exceptions: Special applications where wide temperature ranges are not acceptable (retirement homes, data processing, museums, some areas of hospitals) and are approved by the authority having jurisdiction.
   b. **Automatic Shutdown.** Each HVAC system shall have controls that can start and stop the system under different time schedules for seven different day types per week, are capable of retaining programming and time setting during loss of power for a period of at least 10 hours, and include an accessible manual override, or equivalent function, that allows temporary operation of the system for up to two hours.
   c. **Setback Controls.** Heating systems have the capability to automatically restart and temporarily operate the system to maintain zone temperatures above a heating setpoint adjustable down to 55°F or lower. Cooling systems shall have the capability to automatically restart and temporarily operate the system as required to maintain zone temperatures below a cooling setpoint adjustable up to 85°F or higher or to prevent high space humidity levels.
   d. **Gravity Hoods, Vents, and Ventilators.** All outdoor air supply and exhaust hoods, vents, and ventilators shall have motorized dampers that automatically shut when the spaces served are not in use.
   e. **Shutoff Damper Controls.** Both outdoor air supply and exhaust systems shall be equipped with motorized dampers that automatically shut when the systems or spaces served are not in use. Ventilation outdoor air dampers shall automatically shut off during preoccupancy building warm-up, cool down, and setback. Exceptions:
   i. Gravity (non-motorized) dampers are acceptable in exhaust systems in ASHRAE 90.1 2007 climate zones 1, 2, 3.
   ii. Gravity (nonmotorized) dampers are acceptable in systems with a design outdoor air intake or exhaust capacity of 300 cfm or less.
2. SINGLE ZONE CONSTANT VOLUME A/C PACKAGED OR SPLIT SYSTEM:
   a. Programmable thermostat controls system off/on cycles; multiple cycles per day. Interlock the heater and the outdoor condensing unit so they do not run simultaneously.
   b. Occupied Period 8AM-9PM (Adjustable), normal operation: The indoor fan runs continuously to maintain the supply and ventilation air CFMs. Upon a call for cooling by the zone thermostat, the compressor(s) cycles to maintain the setpoint. Upon a call for heating, the heating coil shall be activated to maintain the setpoint. For units equipped with 2-stage cooling and/or 2-stage heating:
      b.a. 2-stage cooling thermostat with a cooling setpoint at 75° F (adjustable): When the space temperature rises to 75.5° F, the space thermostat shall signal the unit onboard controller to energize stage 1 cooling. If the temperature continues to rise to 76° F, the space thermostat shall signal the unit onboard controller to go to stage 2 cooling.
      b.b. 2-stage heating thermostat with a heating setpoint at 72° F (adjustable): When the space temperature drops to 71.5° F, the space thermostat shall signal the unit onboard controller to go to heating mode, stage 1 heating. If the temperature continues to drop to 71° F, the space thermostat shall signal the unit onboard controller to go to stage 2 heating.

23 21 16 HYDRONIC PIPING SPECIALTIES
HEAT TRACING
Provide in exterior areas. Use self regulating, 5 watt per linear ft, 120 volt cable equal to Chromalox SRL5-1. Provide splice and end seals as required. Use minimum 1 extra ft cable at each fitting, minimum 5 extra feet at each valve. Tape to pipe with Chromalox FT-1 fiberglas tape or equal on 1 ft intervals. Control heat tracing with ambient sensing Chromalox RTAS-1 microswitch; do not allow operation above 40 F outdoor temperature. Tracing and controls exposed to outside shall be suitable for outdoor use. Increase pipe insulation inside diameter to account for tape. Megger tape after installation and submit report. Electrical power shall have ground fault breaker.

23 23 00 REFRIGERANT PIPING AND SPECIALTIES
Size per A/C unit manufacturer's recommendation, including requirement for long line applications. Provide solenoid valves, traps and/or accumulator when recommended by condensing unit vendor, such as for underground lines. All joints shall be brazed with oxygen-acetylene torches by a qualified technician. Use homerun piping (no solder joints) from the condenser to the evaporator. Size per manufacturer's recommendations. Route hidden from view. Insulate suction line. Seal wall penetrations. Clean and Pressure test all refrigerant piping circuits after complete installation per the Plumbing Specification 22 01 11.
Copper Tubing: ASTM B280, Type ACR hard drawn or annealed, dehydrated, charged with nitrogen, and plugged by the manufacturer. Fittings: ASME B16.22 wrought copper. Joints: Braze

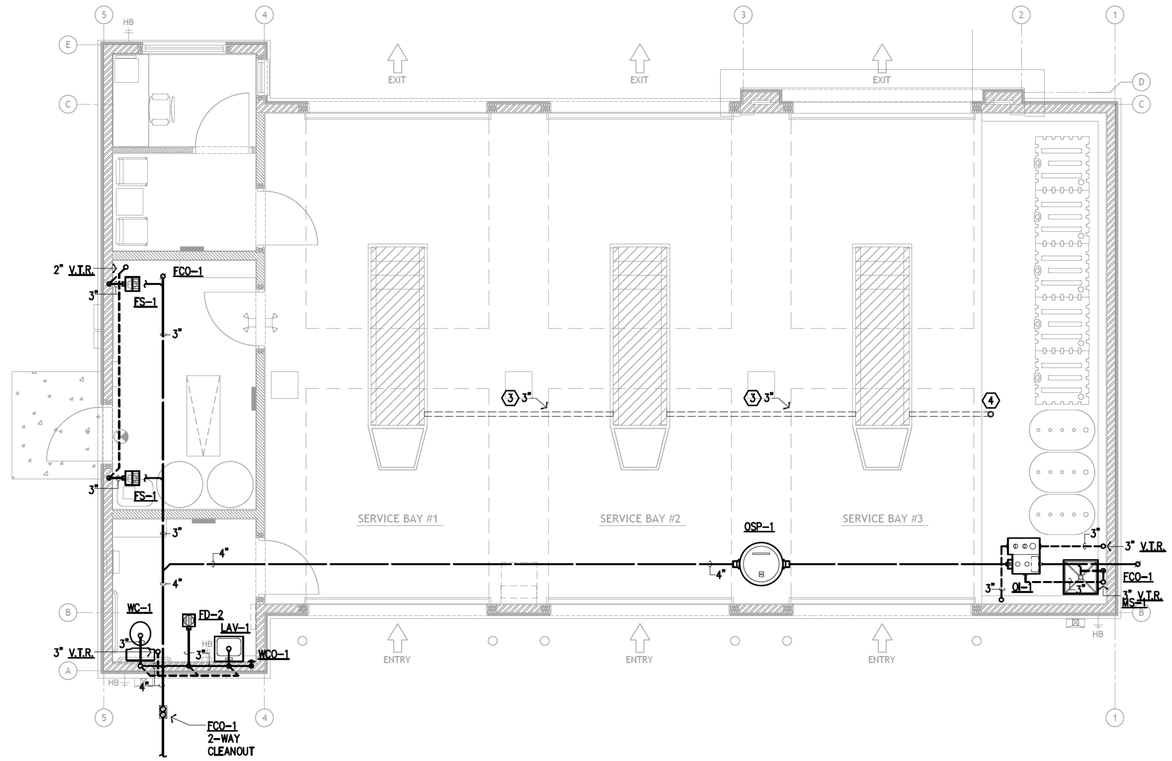

1 SANITARY PLAN

SCALE: 1/4" = 1'-0"

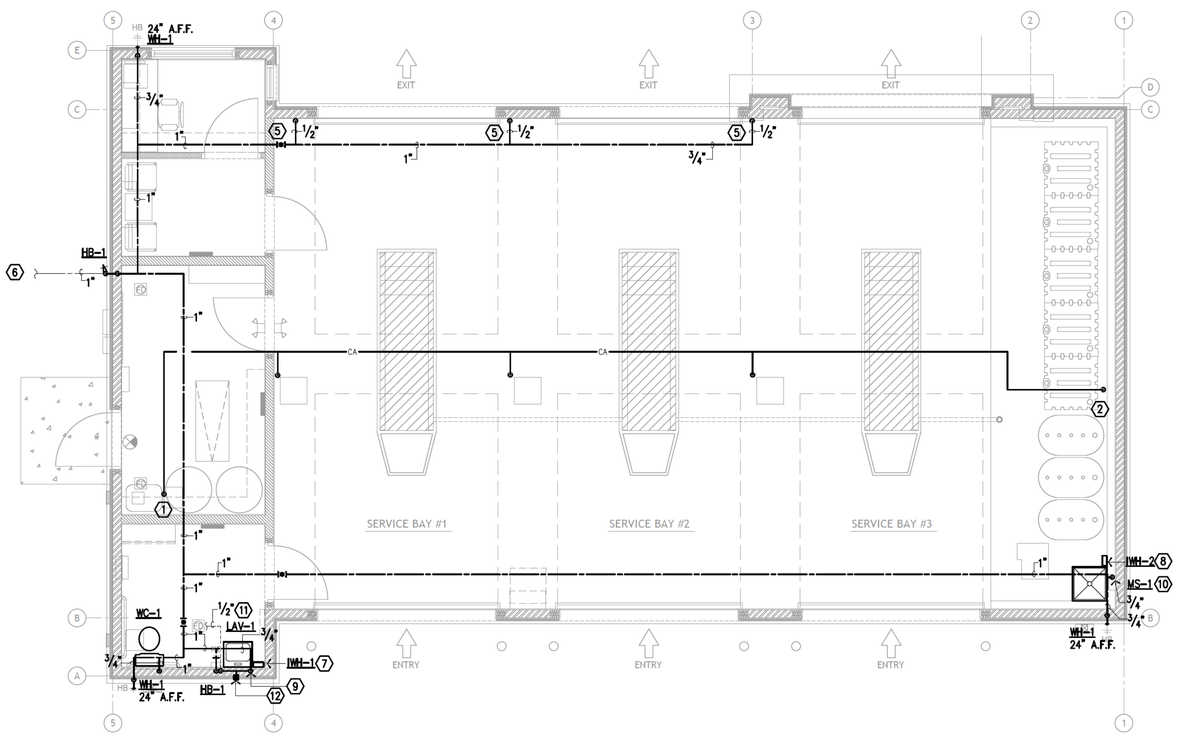

2 SUPPLY PIPING PLAN

SCALE: 1/4" = 1'-0"

KEYED NOTES

1. COMPRESSED AIR DROP TO COMPRESSOR.
2. COMPRESSED AIR DROP TO OIL PUMP.
3. 3" PVC PIT CONDUIT WITH LONG RADIUS.
4. TURN CONDUIT UP 1" A.F.F.
5. 1/2" CW DROP IN WALL TO 10' A.F.F. AND TERMINATE WITH 1/2" BALL VALVE. CENTER PIPE BETWEEN DOORS. PROVIDE MALE HOSE FITTING AND AIR GAP FITTING AT VALVE FOR FUTURE HOSE CONNECTION.
6. HEAT TRACE EXPOSED WATER PIPE OUTSIDE. ALL WATER PIPING BELOW GRADE MUST BE BELOW THE FROST LINE. COORDINATE WITH ELECTRICAL CONTRACTOR TO PROVIDE HEAT TRACE POWER. REFER TO PLUMBING SPECIFICATION FOR HEAT TRACING DETAILS.
7. MOUNT IWH-1 BELOW LAVATORY. 1/2"ø HOT WATER OUTLET TO HOT WATER CONNECTION OF LAVATORY.
8. MOUNT IWH-2 BELOW MOP SINK FAUCET. 3/4"ø HOT WATER OUTLET TO HOT WATER CONNECTION OF MOP SINK.
9. 3/4" DOMESTIC WATER LINE DOWN IN WALL. TURN OUT. SPLIT INTO TWO (2) 1/2"ø BRANCHES TO CONNECT TO SUPPLY INLET OF IWH-1 AND COLD WATER SUPPLY OF LAVATORY.
10. 3/4" DOMESTIC WATER LINE DOWN IN WALL. TURN OUT. SPLIT INTO TWO (2) 3/4"ø BRANCHES TO CONNECT TO SUPPLY INLET OF IWH-2 AND COLD WATER SUPPLY OF MOP SINK.
11. TRAP PRIMER LINE BELOW SLAB TO FLOOR DRAIN.
12. MOUNT TRAP PRIMER 18" A.F.F. IN ACCESSIBLE LOCATION. INSTALL PER MANUFACTURER'S INSTRUCTION.

NOTES:

1. PROVIDE HEAT TRACE ON ALL EXPOSED WATER PIPES IN SERVICE BAY AND STORAGE ROOM. COORDINATE WITH ELECTRICIAN TO PROVIDE POWER.
2. CONFIRM ALL HOSE BIB LOCATIONS WITH OWNER PRIOR TO INSTALLATION.
3. COMPRESSED AIR SYSTEM SHOWN IS FOR REFERENCE ONLY, AND SHALL BE DESIGNED BY OTHERS. SEE OWNER EQUIPMENT PROVIDER FOR DETAILED INFORMATION.

GENERAL PLAN NOTES

A. DRAWINGS ARE DIAGRAMMATIC. FIELD COORDINATE DIMENSIONS AND LOCATIONS. COORDINATE EXACT ROUTING OF ALL SERVICES WITH ALL OTHER TRADES. USE LARGER DIMENSIONS IF MULTIPLE DIMENSIONAL CONSTRAINTS APPEAR TO OVERLAP OR CONFLICT WITH EACH OTHER.

B. GUARANTEE LABOR AND MATERIALS FOR 1 YEAR.

C. FURNISH AND INSTALL SHOCK ARRESTORS IN COLD WATER LINES AT CONNECTIONS TO FLUSH VALES AND QUICK CLOSING VALVES AND AT ALL HOT AND COLD WATER CONNECTIONS TO FIXTURES. REFER TO PLUMBING SPECIFICATION.

D. SEAL ALL PENETRATIONS THRU FLOORS, EXTERIOR WALLS, AND RATED ASSEMBLY WITH APPROPRIATE WEATHER PROOF, FIRE PROOF SEALANT AND/OR FIRE STOPS.

E. ALL FIXTURES, EQUIMENT PROVIDED SHALL MEET OR EXCEED STATE AND LOCAL CODE REQUIREMENTS IN ADDITION TO REQUIREMENTS IN THE SPECIFICATION.

F. DO NOT RUN PIPING OVER ELECTRICAL PANELS.

G. PLENUMS ARE CROWDED. NOT ALL OBSTACLES ARE INDICATED ALLOW FOR ALL ADDITIONAL PIPE OFFSETS AS REQUIRED TO ADJUST TO ACTUAL FIELD CONDITIONS.

H. THIS CONTRACTOR SHALL BE RESPONSIBLE FOR PROPER ALIGNMENT OF PIPES AT POINT OF CONNECTION AND SHALL CORRECT MISALIGNED PIPING AT NO COST TO THE OWNER.

I. COORDINATE WITH STRUCTURE AND OTHER DISCIPLINES.

J. CONTRACTORS SHALL COORDINATE EQUIPMENT CONNECTIONS WITH EQUIPMENT SUPPLIER. INSTALL EQUIPMENT AND MAKE FINAL CONNECTIONS, FURNISHING SHUTOFF VAVLES, P-TRAPS, P.R.V'S, AND PIPING AS REQUIRED.

K. SHARE TRENCHES WITH OTHER TRADES WHERE POSSIBLE.

L. ALL NEW CONSTRUCTION MATERIALS AND PRODUCTS TO BE USED IN THE BUILDING MUST BE CERTIFIED BY THE MANUFACTURE AS ASBESTOS FREE OR ARE ACCOMPANIED BY MATERIAL SAFETY DATA SHEETS/PRODUCT DATA SHEETS THAT INDICATE THEY ARE ASBESTOS FREE.

M. CONTRACTOR IS RESPONSIBLE FOR CLEANING AND SANITIZING THE EXISTING WATER LINES AT THE COMPLETION OF THE PROJECT.

N. PRICING SHALL INCLUDE ANY PLUMBING PIPING OFFSETS OR REROUTING DUE TO OBSTRUCTIONS.

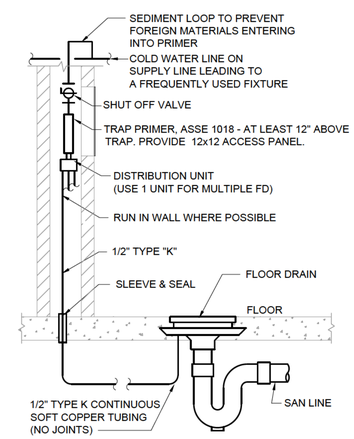

3 TRAP PRIMER DETAIL

NOT TO SCALE

Watson Consulting Engineers, PLLC
P.O. BOX 721206
Houston, Texas 77272
(832) 860-5237
ctang@watsonengineers.com
TEXAS FIRM REG#: 17751

ALTAR GROUP
ARCHITECTURE ENGINEERING

SEAL:

STATE OF TEXAS
CHAU THANH N. TANG
83415
LICENSED
PROFESSIONAL ENGINEER
02/21/25

CONSULTANTS:

TAKE 5 OIL CHANGE
PROTOTYPE: 3 BAY
5331 WALZEM ROAD
SAN ANTONIO, TX 78218

REV	DATE	DESCRIPTION
1	11/28/24	ISSUE FOR PERMIT
2	02/21/25	RE-ISSUE FOR PERMIT

DRAWN BY:
CHECKED BY:
ARCH. PROJECT NO.: DB24-023
SHEET NAME: PLUMBING PLANS
SHEET NUMBER: P-101

File Name: C:\Users\chaut\appdata\local\temp\AcPublish_26516\202411-043 TSO SA 6630 WALZEM_24-023 MP.DWG
User: chaut
Date/Time: Feb 21, 2025 - 12:19pm
Xref File(s): (DIESEL evaluation failed)

PLUMBING FIXTURE SCHEDULE

PLAN MARK	DESCRIPTION	MANUFACTURE CATALOG #	ACCESSORIES	MINIMUM ROUGH-IN SIZES				REMARKS	ACCEPTABLE MAUFACTURES
				W	V	CW	HW		
FCO-1	ROUND UNFINISHED FLOOR DUCO CAST IRON CLEANOUT WITH HEAVY DUTY ROUND ADJUSTABLE SCORIATED CAST IRON VANDAL PROOF TOP.	JR SMITH 4220S-U SERIES		SEE REMARKS	---	---	---	CLEANOUTS SHALL BE THE SAME NOMINAL SIZE AS THE PIPE THEY SERVE UP TO 3 INCHES. FOR PIPES 4" AND LARGER, CLEANOUTS SHALL BE 3-1/2".	ZURN, JOSAM
FD-1	DUCO CAST IRON BODY FLOOR DRAIN WITH FLASHING COLLAR AND NICKEL BRONZE ROUND ADJUSTABLE STRAINER HEAD	JAY R. SMITH MFG. CO. 2005Y03-A05-NB	SURE SEAL TRAP GUARD #SS2009	3	2"	---	---		JR SMITH, ZURN, JOSAM
FD-2.	DUCO CAST IRON BODY FLOOR DRAIN WITH FLASHING COLLAR AND NICKEL BRONZE ROUND ADJUSTABLE STRAINER HEAD, TRAP PRIMER CONNECTION	JAY R. SMITH MFG. CO. 2005Y03-A05-NB-P050	WATTS LFTP300 TRAP PRIMER. LOCATE TRAP PRIMERS IN ACCESSIBLE LOCATIONS FOR SERVICE.	3"	2"	---	---		JR SMITH, ZURN, JOSAM
FD-3	DUCO CAST IRON BODY FLOOR DRAIN WITH FLASHING COLLAR AND NICKEL BRONZE ROUND ADJUSTABLE STRAINER HEAD	JAY R. SMITH MFG. CO. 2005Y03-A05-NB-3581	PROVIDE WITH 6" FUNNEL, SURE SEAL TRAP GUARD #SS2009	3"	2"	---	---		JR SMITH, ZURN, JOSAM
FS-1	SQUARE 8.5" SQ TOP, 6" SUMP DEPTH, CAST IRON FLANGED RECEPTOR WITH SEEPAGE HOLES, ACID RESISTANT COATED INTERIOR, NICKEL BRONZE RIM, DOME BOTTOM STRAINER AND SECURED 1/2 GRATE.	JAY R. SMITH FLOOR SINK 3100-03-12	PROSET SYSTEM TRAP GUARD	3"	2"	---	---		JR SMITH, JOSAM
GCO	DUCO CAST IRON CLEANOUT AND DOUBLE FLANGED HOUSING WITH ROUND SCORIATED CAST IRON TOP. WITHSTAND HEAVY LOAD TRAFFIC.	JR SMITH #4250S		SEE REMARKS				CLEANOUTS SHALL BE THE SAME NOMINAL SIZE AS THE PIPE THEY SERVE UP TO 3 INCHES. FOR PIPES 4" AND LARGER, CLEANOUTS SHALL BE 3-1/2".	OR EQUAL
HB-1	WALL FAUCET ANTI SIPHON INTEGRAL BACKFLOW PROTECTION. 3/4" MALE HOSE THREAD NOZZLE	WOODFORD MODEL 24		---	---	1/2"	---		OR EQUAL
LAV-1	WALL MOUNTED, ADA, VITEROUS CHINA, WALL HANGER, SQUARE-SHAPED BOWL, DECK MOUNTED WRIST BLADE FAUCET (0.5 GPM), HOLES ON 4" CENTER, REAR OVERFLOW, GRID STRAINER, PROVIDE TRUEBO INSULATION	AMERICAN STANDARD COMRADE 0124.024	DELTA FAUCET #523LF-HGMHDF, SINGLE LEVER, 6" LONG HANDLE, MCGUIRE 1/2" IPS X 3/8" OD CHROME PLATED LEAD FREE LOOSE KEY STOP VALVE WITH ESCUTCHEON AND 12" STAINLESS STEEL BRAIDED FLEXIBLE RISERS. MCGUIRE 155A GRID DRAIN WITH P.O. PLUG FOR LAVATORY OVERFLOW. PROVIDE TMV-1.	2"	2"	1/2"	1/2"	MOUNTING HEIGHT AND TRIM AS REQUIRED FOR HANDICAPPED USE. REFERENCE ARCHITECTURAL DRAWINGS.	KOHLER,TOTO, CRANE
MS-1	MOLDED STONE, MOP SINK BASIN, 24"x24"x10" WITH STAINLESS STEEL DOME STRAINER, DRAIN BODY FOR 3" PIPE CONNECTION.	FIAT #MSB2424	FIAT #830AA SERVICE FAUCET, #832AA HOSE AND BRACKET, #889-CC MOP HANGER	3"	2"	3/4"	3/4"		ACORN, CRANE, AMERICAN STANDARD
OI-1	OIL INTERCEPTOR WITH INTEGRAL STORAGE COMPARTMENT. INTERCEPTOR SHALL HAVE 10 GPM FLOW RATE, 5 GAL STORAGE TANK, SEDIMENT BASKET, TRAFFIC RATED COVER, COMPLETE WITH FLOW CONTROL FITTING	JAY R. SMITH MFG. CO. 8599-10-5-H20-CBS-EX	4" CLEANOUT ACCESS, HIGH LEVEL SENSOR AND CONTROL PANEL, EXTENSION	3"	2"	---	---	CONTRACTOR TO VERIFY INVERTED ELEVATION AND EXTENSION HEIGHT PRIOR TO PURCHASING EXTENSION.	JR SMITH, JOSAM
OSP	OIL SAMPLING PORT. USED FOR ABOVE OR BELOW GRADE APPLICATION WITH WATER/GAS-TIGHT SEAL COVER, H-20 RATED, AND HAVE MINIMUM 40,000 LBS LOAD CAPACITY. PROVIDE FIELD CUT RISER MODEL #FCR20 TO ENABLE ACCESS FOR BELOW GRADE INSTALLATION.	SCHIER SV24	RISER MODEL FCR2(x#), PLAIN END FITTINGS	4"	---	---	---	CONTRACTOR TO VERIFY PIPE SIZE, INVERTED ELEVATION AND EXTENSION HEIGHT PRIOR TO PURCHASING RISER AND PLAIN END FITTINGS.	JR SMITH, JOSAM
TMV-1	LAVATORY THERMOSTATIC MIXING VALVE. 0.5-12 GPM, LEAD FREE MIXING VALVE, TEMPERATURE CONTROL BETWEEN 80-100 F WITHIN +/- 3 F.	WATTS # LFMMV	ADJUSTABLE THERMOSTATIC, ASSE 1017, 1069, & 1070,AND LISTED IAPMO UPC. POINT-OF-USE MIXING VALVE WITH INLET CHECK STOPS TO LIMIT HOT WATER TEMP. TO MAXIMUM 105° F. AT FAUCET OUTLET. SUPPLY CW TO MIXING VALVE FROM CW RISER TO FAUCET.	---	---	1/2"	1/2"	INSTALL BELOW FIXTURE AND HIGH AS POSSIBLE TO PROVIDE NEAT AND CLEAN APPEARANCE.	
TG-1	TRAP GUARD	PROSET SERES #TG		---	---	---	---	CONFIRM SIZE ON PLAN	OR EQUAL
WB-1	RECESSED, 20 GAUGE GALVANIZED ICE MAKER BOX WITH LEAD FREE DOMESTIC VALVE COMPLIED WITH NSF-61-G AND ASME A112.18.1. VALVE SHALL HAVE 1/2" MIP/SWEAT CONNECTION AND 1/4" OD COMPRESSION OUTLET.	GUY GRAY BIM-875AB	PROVIDE LEAD FREE, STAINLESS STEEL SUPPLY KIT WITH 1/4" FIP INLET X 1/4" O.D. OUTLET COMPRESSION UNION TUBE. PROVIDE CUNO #AP717 FILTER BRACKETED TO WALL.	---	---	1/2"	---	VERIFY MOUNTING HEIGHT WITH ARCHITECTURAL DRAWINGS.	
WCO	WALL CLEAN OUT, TAPER THREAD PLUG WITH ROUND STAINLESS STEEL COVER	JAY R. SMITH #4472T		MATCH PIPE	---	---	---		
WHA-1	WATER HAMMER ARRESTER	WATTS SERIES 15M2-"SIZE"		---	---	3/4"	---	SIZE PER PDI STANDARDS	OR EQUAL
WH-1	FREEZELESS WALL HYDRANT WITH ANTI SHIPHON VACUUM BREAKER. MODULAR BOX WITH LOCKABLE 14 GAUGE STAINLESS STEEL COVER DOOR.	WOODFORD MB65		---	---	3/4"	---		OR EQUAL
WC-1	CADET PRO RIGHT HEIGHT ELONGATED, 16.5" RIM ADA TOILET, 1.28 GPF. TWO PIECE TANK TOILET, FLOOR MOUNTED, VITREOUS CHINA WHITE COLOR, WITH EVERCLEAN ANTIMICROBIAL SURFACE WITH INHIBITS THE GROWTH OF STAIN AND ODOR CAUSING BATERIA, MOLD AND MILDEW.	AMERICAN STANDARD 215AA.104	CHURCH OPEN FRONT SEAT 295CT <<AMERICAN STANDARD SLOW-CLOSE SEAT5321.110>>, AND LOOSE KEY STOP	4"	2"	1/2"	---		KOHLER, TOTO, CRANE

ELECTRIC INSTANTANEOUS WATER HEATER SCHEDULE

DESIGNATION	MANUFACTURER OR EQUAL	MODEL	DESCRIPTION	TEMP RISE (F°)	ELEMENT WATTAGE	VOLT	ACCESSORIES
IWH-1	CHRONOMITE	M-30/240	COMMERCIAL INSTANT-FLOW WATER HEATER, NICHROME HEATER, MICRO-PROCESSOR CONTROL, CASE ALUMINUM HOUSING. MEET LOCAL PLUMBING CODES AND ADA. UL LISTED. SET AT 110°.	32.8 @ 1.50 GPM	7,200	240/1	FAUCET FLOW CONTROL, FIELD INSTALLED SUPPLY STOP AND DISCONNECT SWITCH
IWH-2	CHRONOMITE	M-40/240	COMMERCIAL INSTANT-FLOW WATER HEATER, NICHROME HEATER, MICRO-PROCESSOR CONTROL, CASE ALUMINUM HOUSING. MEET LOCAL PLUMBING CODES AND ADA. UL LISTED. SET AT 110°.	43.7 @ 1.50 GPM	9,600	240/1	FAUCET FLOW CONTROL, FIELD INSTALLED SUPPLY STOP AND DISCONNECT SWITCH

NOTES:
1. FACTORY-PROVIDED DISCONNECT SWITCH MOUNTED NEXT TO HEATER, CHRONOMITE 2906 DISCONNECT..
2. INSTALL HEATER BELOW THE LEVEL OF ALL HOT WATER OUTLETS SERVICED BY THE HEATER.

SYMBOLS AND ABBREVIATIONS

MARK	DESCRIPTION	MARK	DESCRIPTION
	COLD WATER PIPING		PIPING UP
	HOT WATER PIPING		PIPING DOWN
	HOT WATER RETURN PIPING		BALL VALVE
	SANITARY PIPING		DOWN
	SANITARY VENT PIPING	FCO / WCO	FLOOR CLEAN OUT / WALL CLEAN OUT
FD	FLOOR DRAIN	WC	WATER CLOSET TYPE AS SCHEDULED
FS	FLOOR SINK	LAV	LAVATORY TYPE AS SCHEDULED
	WATER HAMMER ARRESTOR WHA-## - PDI SIZE SEE SPEC	SK	SINK TYPE AS SCHEDULED
EWH	ELECTRIC WATER HEATER TYPE AS SCHEDULED	M	WATER METER

UNLESS NOTED OTHERWISE, WATER AND VENT PIPING SHOWN ARE ABOVE CEILING, WASTE IS BELOW FLOOR.

PIPE MATERIALS SCHEDULE

PIPING SYSTEM	PIPING MATERIAL
SANITARY & VENT ABOVE SLAB INSIDE RETURN AIR PLENUM	CAST IRON WITH DWV NO-HUB FITTINGS AND CLAMPS
SANITARY & VENT ABOVE SLAB NOT INSIDE RETURN AIR PLENUM	SCHEDULE 40 POLY VINYL CHLORIDE (PVC) PLASTIC PIPE
SANITARY DRAIN BELOW SLAB	SCHEDULE 40 POLY VINYL CHLORIDE (PVC) PLASTIC PIPE
DOMESTIC HOT & COLD WATER	TYPE "L" HARD DRAWN COPPER

Watson Consulting Engineers, PLLC
P.O. BOX 721206
Houston, Texas 77272
(832) 860-5237
ctang@watsonengineers com
TEXAS FIRM REG#: 17751

ALTAR GROUP
ARCHITECTURE ENGINEERING

SEAL:

STATE OF TEXAS
CHAU THANH N. TANG
83415
LICENSED
PROFESSIONAL ENGINEER
02/21/25

CONSULTANTS:

TAKE 5 OIL CHANGE
PROTOTYPE: 3 BAY
5331 WALZEM ROAD
SAN ANTONIO, TX 78218

REV	DATE	DESCRIPTION
1	11/26/24	ISSUE FOR PERMIT
2	02/21/25	RE-ISSUE FOR PERMIT

DRAWN BY:
CHECKED BY:
ARCH. PROJECT NO.: DB24-023
SHEET NAME: PLUMBING SCHEDULES
SHEET NUMBER: P-201

File Name: C:\Users\chaut\appdata\local\temp\AcPublish_26516\202411-043 T50 SA 6630 WALZEM_24-023 MP.DWG
User: chaut
Date/Time: Feb 21, 2025 - 12:19pm Xref File(s): (DIESEL evaluation failed)

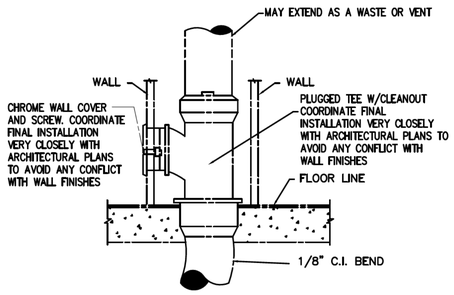

12 TYPICAL WALL CLEANOUT
NOT TO SCALE

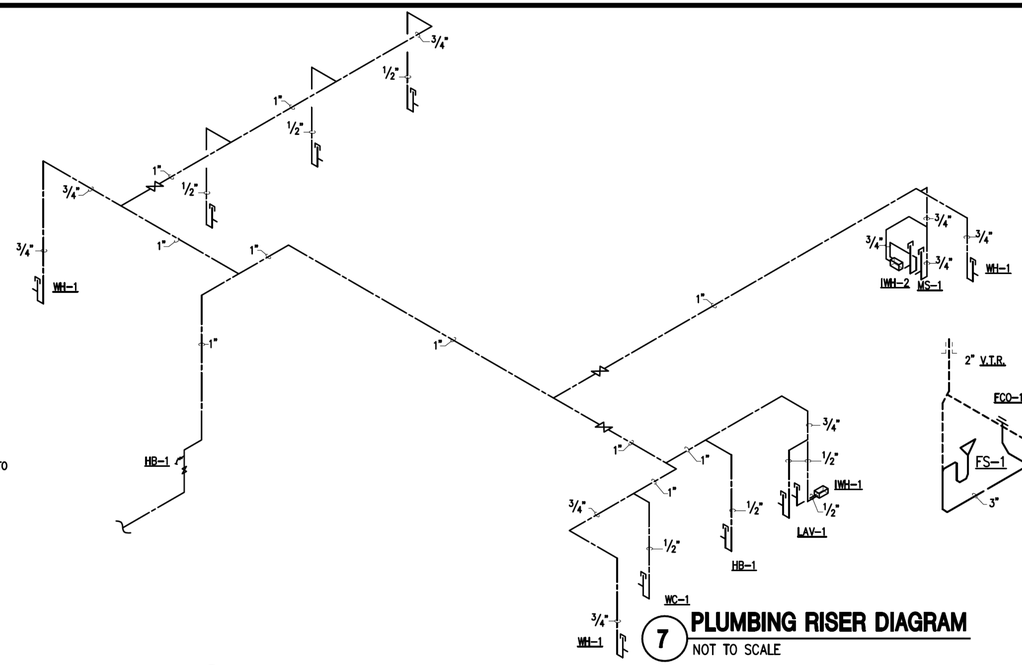

7 PLUMBING RISER DIAGRAM
NOT TO SCALE

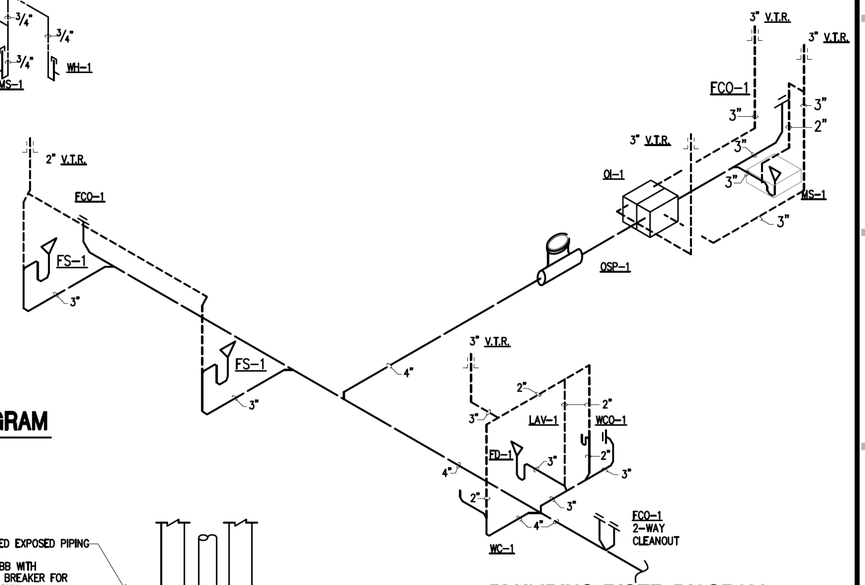

2 PLUMBING RISER DIAGRAM
NOT TO SCALE

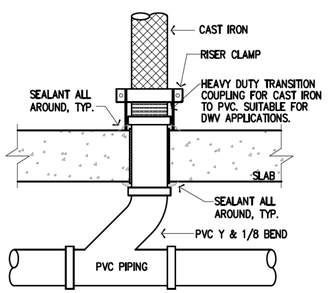

11 CAST IRON TO PVC PIPING BELOW SLAB
NOT TO SCALE

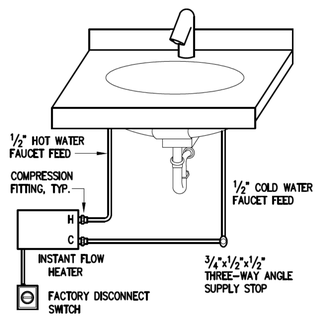

NOTES:
1. INSTALL HOT WATER HEATER BELOW THE LEVEL OF ALL HOT WATER OUTLETS SERVICED BY HEATER.
2. COORDINATE POWER OF HEATER WITH ELECTRICIAN.

9 INSTANTANEOUS WATER HEATER
NOT TO SCALE

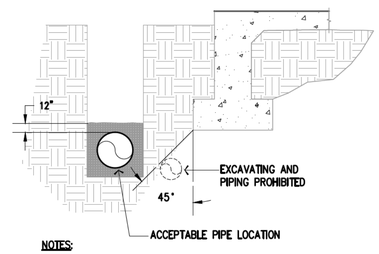

NOTES:
1. TRENCHES DEEPER THAN THE FOOTING OF THE STRUCTURE AND PARALLEL THE SAME SHALL NOT BE BELOW THE 45° BEARING PLANE OF THE FOOTING OR THE WALL.
2. BACKFILL SHALL BE FREE FROM DISCARDED CONSTRUCTION MATERIAL AND DEBRIS. BACKFILL TRENCH WITH LOOSE EARTH IN THIN LAYERS AND TAMP IN PLACE UNTIL THE CROWN OF THE PIPE IS COVERED 12" OF TAMPED EARTH. BACKFILL UNDER AND BOTH SIDES OF PIPES FOR PIPE SUPPORT.

6 EXCAVATION DETAIL
NOT TO SCALE

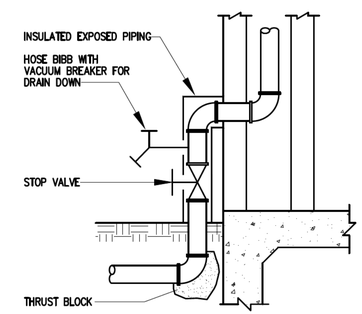

4 COLD WATER BUILDING ENTRY
NOT TO SCALE

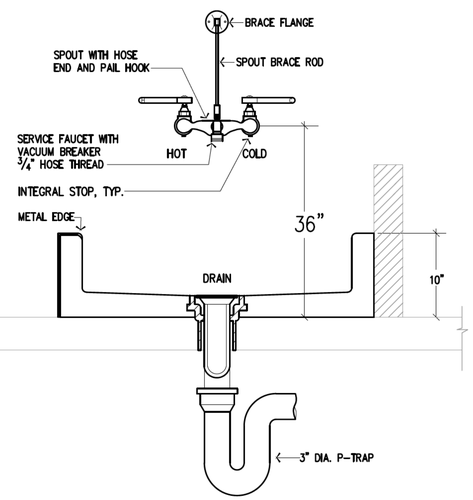

1 MOP SINK DETAIL
NOT TO SCALE

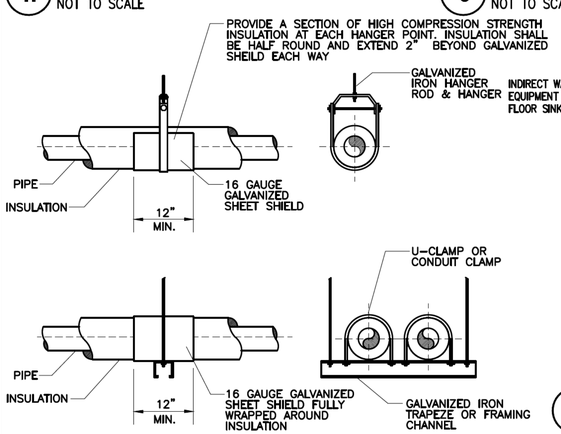

NOTES:
1. FOR NON-INSULATED COPPER PIPE, PROVIDE COPPER HANGERS OR PLASTIC COATED HANGERS.

10 PIPE HANGER DETAIL
NOT TO SCALE

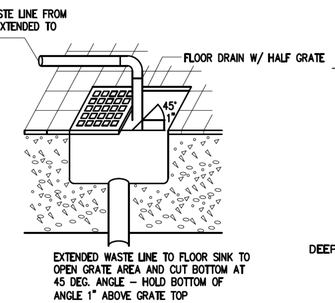

8 INDIRECT WASTE LINE
NOT TO SCALE

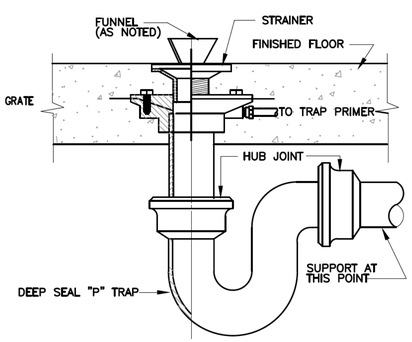

5 FLOOR DRAIN
NOT TO SCALE

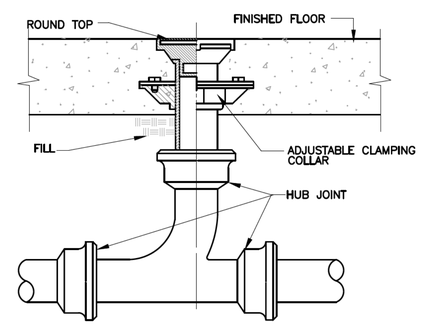

3 FLOOR CLEANOUT
NOT TO SCALE

Watson Consulting Engineers, PLLC
P.O. BOX 721206
Houston, Texas 77272
(832) 860-5237
ctang@watsonengineers com
TEXAS FIRM REG#: 17751

ALTAR GROUP
ARCHITECTURE ENGINEERING

SEAL:

STATE OF TEXAS
CHAU THANH N. TANG
83415
LICENSED
PROFESSIONAL ENGINEER
02/21/25

CONSULTANTS:

TAKE 5 OIL CHANGE
PROTOTYPE: 3 BAY
5331 WALZEM ROAD
SAN ANTONIO, TX 78218

REV	DATE	DESCRIPTION
1	11/26/24	ISSUE FOR PERMIT
2	02/21/25	RE-ISSUE FOR PERMIT

DRAWN BY:
CHECKED BY:
ARCH. PROJECT NO.: DB24-023
SHEET NAME: PLUMBING DETAILS
SHEET NUMBER: P-301

File Name: C:\Users\chaut\appdata\local\temp\AcPublish_26516\202411-043 T50 SA 6630 WALZEM_24-023 MP.DWG
User: chaut
Date/Time: Feb 21, 2025 - 12:19pm
Xref File(s): (DIESEL evaluation failed)

In case of conflicts between drawings, or specs and drawings, Contractors shall request clarifications in writing from Architect/Engineer, otherwise the more stringent requirements shall be provided.

5331 WALZEM RD TAKE 5 OIL

SAN ANTONIO, TEXAS

GENERAL NOTES AND PLUMBING SPECIFICATIONS

CODE INFORMATION

Applicable codes include but are not limited to: City of San Antonio International Plumbing Code 2021 plus Amendments, City of San Antonio International Building Code 2021 plus Amendments, City of San Antonio Energy Code, City of San Antonio International Fire Code 2021 plus Amendments, Standard for the Installation of Sprinkler Systems (NFPA 13), Texas Accessibility Standards, American with Disabilities Act.

THIS PROJECT SHALL COMPLY WITH THE LOCAL ENERGY CODE, INCLUDING BUT NOT LIMITED TO THE FOLLOWING ENERGY CODE SECTION. ALL EQUIPMENT PROVIDED AND CONTROL PROGRAMMING SHALL COMPLY WITH THE ENERGY CODE REQUIREMENT IN THIS SECTION:

IECC ENERGY CODE - MANDATORY

C403.12.3 Piping insulation. All piping serving as part of a heating or cooling system shall be thermally insulated in accordance with Table C403.12.3. Exceptions: 1. Factory-installed piping within HVAC equipment tested and rated in accordance with a test procedure referenced by this code. 2. Factory-installed piping within room fan-coils and unit ventilators tested and rated according to AHRI 440 and 840. 3. Piping that conveys fluids that have a design operating temperature range between 60°F and 105°F. 4. Piping that conveys fluids that have not been heated or cooled through the use of fossil fuels or electric power. 5. Strainers, control valves, and balancing valves associated within piping 1 inch or less in diameter. 6. Direct buried piping that convey fluids at or below 60°F. 7. In radiant heating systems, sections of piping intended b design to radiate heat.

Table C403.12.3 Minimum Pipe Insulation Thickness

Fluid Op. Temp	Insulation Conductivity Conductivity	Mean Rating Temp	Nominal Pipe/Tube Sizes <1	1-1.5	1.5- <4	4 - <8	>8
>350	0.32-0.34	250	4.5	5.0	5.0	5.0	5.0
251-350	0.29-0.32	200	3.0	4.0	4.5	4.5	4.5
201-250	0.27-0.30	150	2.5	2.5	2.5	3.0	3.0
141-200	0.25-0.29	125	1.5	1.5	2.0	2.0	2.0
105-140	0.21-0.28	100	1.0	1.0	1.5	1.5	1.5
40-60	0.21-0.27	75	0.5	0.5	1.0	1.0	1.0
<40	0.20-0.26	50	0.5	1.0	1.0	1.0	1.5

C403.12.3.1 Protection of piping insulation. Piping insulation exposed to weather shall be protected from damage, including that due to sunlight, moisture, equipment maintenance and wind, and shall provide shielding from solar radiation that can cause degradation of the material. Adhesive tapes shall not be permitted.

C403.13.3 Freeze protection system controls. Freeze protection systems, such as heat tracing of outdoor piping and heat exchangers, including self-regulating heat tracing shall include automatic controls configured to shut-off the systems when outdoor air temperatures are above 40° F or when the conditions of the protected fluid will prevent freezing.

PLUMBING GENERAL NOTES (APPLY TO ALL SHEETS)

A. Drawings are diagrammatic; confirm dimensions and locations in the field. If conflicting dimensions are shown, use larger dimension.

B. All plumbing piping, equipment, and fixture installations shall be performed by a licensed plumbing contractor. All plumbing work shall be supervised by a licensed Master Plumber.

C. Guarantee labor 1 year and materials for 3 years. Warranties begin upon Owner's acceptance of substantial completion of the installation. When a manufacturer offers factory warranty on equipment, such as but not limited to compressors, heaters, motors, water heater, etc., Contractor shall present the warranty information to Client (or Owner), and allow the Client the choice to reduce Contractor warranty or add the Contractor warranty on top of the factory warranty. Failure to disclose all the warranty information to the Client will automatically be Contractor's choice of providing the minimum 1 year labor warranty and 3 year part warranty regardless of the factory warranty. It is the Contractor's responsibility to inform the Client if the Contractor refuses or is unable to extend the warranty periods as indicated above. Contractor must register all warranties with equipment manufacturers immediately after purchasing equipment. If the Owner and Contractor do not have a service agreement thru the warranty period, the warranty registrations must be under the Owner's name. Failure to register the manufacturer's warranties timely shall result in Contractor providing, at no additional cost to Owner, the same warranties as the manufacturers'.

D. Provide **Zurn model Z-1445**, or equal, cleanout tee in drain lines for all counter-mounted sinks and wall-hung lavatories.

E. Seal all penetrations thru walls, roof, floors, and exterior walls. Penetrations of exterior walls and roofs shall be sealed with water-proof sealants. For through penetrations of fire-resistance rated walls by steel, ferrous or copper pipes, tubes, or conduits, fill the annular space with sealants capable of resisting the passage of flame and hot gases in ASTM E119 or UL 263 fire-temperature conditions under a minimum positive pressure differential of 0.01" w.g. for the time period equivalent to the fire-resistance rating of the construction penetrated. Through-penetrations of fire-resistance rated walls by non-ferrous, non-copper, or by pipes and conduits other than steel shall be installed using the approved firestop systems per ASTM E814 or UL 1479 with a minimum positive pressure differential of 0.01" w.g., to prevent the spread of smoke, fire, toxic gas, or water through the penetration either before, during or after a fire. The fire rating of the firestop system shall be at least that of the floor or wall into which it is installed.

F. Joints to be brazed in place shall be accessible for proper preparation, assembly, heating, filler application, cooling, cleaning and inspection. Pipe ends shall be cut square using a sharp tubing/pipe cutter to avoid deforming the tube/pipe. The cutting wheel shall be free from grease, oil, or other lubricants not suitable for oxygen service. The cut ends of the tube and pipe shall be de-burred with a sharp, clean de-burring tool. Take care to prevent chips from entering the tube or pipe. The surface to be brazed shall be mechanically cleaned using a clean stainless steel wire brush. The use of steel wool is not allowed due to possible presence of oil. After mechanical cleaning, the surface of the tube or pipe shall be wiped using a clean, lint-free cloth. Joints shall be brazed within eight (8) hours of being cleaned. While brazing, joints shall be continuously purged with oil-free dry nitrogen to prevent the formation of copper oxide on the inside surface of the joint. The flow of purge gas shall be maintained until the joint is cool to the touch. After brazing, the outside of all joints shall be cleaned by washing with water and a stainless steel wire brush to remove all residue.

G. At each floor drain installed above slab on grade, install a waterproofing membrane as per specification. Resolve any conflict between water proofing membrane installation requirements and structural installation methods before the actual installation.

H. Provide insulation kit for supplies, drain piping, and trap for all handicap accessible lavatories and sinks. Insulation kit shall be equal to Truebro model 103 (WHITE). Where protective skirt under fixture is provided, insulation of piping is not required.

I. Provide expansion loops in long runs of HW and HWR piping as required by code.

J. Refer to Architectural plans and elevations for exact locations of fixtures and wall mounted devices.

K. All plumbing materials, installation, testing, cleaning, supports, and workmanship shall be in strict compliance with the listed applicable codes.

L. All exceptions or substitutions taken to specified materials, fixtures, equipment, or requirements of these documents shall be submitted to the owner, Architect, and Engineer for review prior to purchase and installation.

M. Refer to project contract documentation and architectural drawings for additional requirements and information.

N. Review architectural plans and elevations for exact locations/elevations of fixtures and wall mounted devices.

O. Plenums are crowded and not all obstacles are indicated. Allow for additional pipe offsets, as required, and when not indicated on drawings.

P. Secure all permits and provide any required temporary utilities.

Q. All plumbing vents thru roof shall have the minimum separation from HVAC outside air inlets per the applicable code, but no **less than 10 ft.**; coordinate with HVAC contractor.

R. All work in or above occupied areas shall be at Owner's convenience and may be during evenings or weekends. Schedule all service interruptions in advance with Owner.

S. Contractor shall visit site prior to bid - no extras will be allowed for conditions that could be readily observed.

T. Piping shall not be routed over electrical panels or transformers.

U. Regardless of whether indicated on the plans or the plumbing risers, provide water hammer arresters based on the following minimum criteria. Additional water hammer arresters may be required if shown on the plans or the risers. The indication of any hammer arresters on the plans or risers does not supersede the requirements of this section:

a. Provide water hammer arrestors at solenoid valves, fast closing valves such as flush valves at water closets and urinals, electronic snap-action valves that control water flow to sensor faucets.

b. Provide water hammer arrestors at all other fixture group of two or more fixtures.

c. For branches exceeding 20 Ft, use multiple hammer arresters. Provide adequate number of hammer arresters to maintain maximum 20 Ft spacing between arresters and no more than 20 Ft distance from the water main to the first arrester

Water hammer arrestors shall be maintenance-free and PDI listed. Water hammer arrestors shall be approved for installation with no access panel required, approved to install with standard pipe tee vertically, horizontally, or at any angle. **Provide Watts Series 15M2-"size"** or approved equal. Size in accordance with PDI standards.

Standard PDI sizing criteria per PDI Standard: Refer to PDI Standard for detailed information

PDI Size	Pipe Size (in)	Pipe Length	Total Press (psig)	Max Reduced Press (psig)
AA	1/2	50	250	150
A	1/2	50	400	150
B	3/4	50	400	150
C	1	50	400	150
D	1-1/4	50	400	150
E	1-1/2	50	400	150
F	2	50	400	150

Sizing branch < 20 Ft, flow pressure <55 psig:

PDI Units	AA	A	B	C	D	E	F
FUs	1-3	1-11	12-32	33-60	61-113	114-154	155-330

Note:

a) For Sizing Table above, use next size arrester when flow pressure exceeds 65 psig; provide a hammer arrester next to the furthest plumbing fixture.

b) For branches exceeding 20 Ft, use multiple hammer arresters and appropriate PDI long line sizing criteria; provide adequate number of hammer arresters to maintain maximum 20 Ft spacing between arresters and no more than 20 Ft distance from the water main to the first arrester. The sum of the FUs rating of multiple arresters serving the same branch shall be equal or greater than the FUs demand of the branch.

c) In addition, provide and locate water hammer arrester as close as possible to the point of quick closure.

V. Provide lead free mixing valves, **Watts LFMMV** or approved equal, for all faucets at public sinks and lavatories to limit water temperature to 110° F maximum. Do not use water heater thermostat to control water temperature.

W. The General Contractor shall make an allowance in his price to pay all gas company setup fees associated with installation of gas service and meter at the building.

X. Clean, test, and sterilize piping systems at completion of the project in accordance with section 22 01 11.

PLUMBING SPECIFICATIONS

22 01 11 CLEANING, TESTING AND DISINFECTING PIPING SYSTEM

CLEANING AND FLUSHING:

A. Water Piping Systems: including building domestic hot and cold water, building drainage and vent, piping systems.

a. After completion of all installation and prior to testing, flush all piping using clean fresh city water at least 10 minutes and until the water leaving the system is clear and free from visible particulate matters.

b. Flushing pressure shall not exceed the system maximum operating pressure stated in the pipe codes.

c. Flushing velocity shall be at least 6 ft/s in the largest pipe size with pipe full.

B. Gaseous Piping Systems: including natural gas, refrigerant piping, compressed air piping systems.

a. After completion of all installation and prior to testing, blow the piping clean. Use with oil-free compressed air or nitrogen.

b. Compressed air: flush piping system to remove all loose debris before testing. Flush using a volume of 2-5 times the expected flow through each respective part of the system, then open and close all outlets and valves, starting from the closets and working to the most remote.

TESTING:

A. Prior to acceptance and initial operation, inspect and pressure test piping systems prior to being covered, applying insulation, and/or treated with any mastic coating, tape, or wrapping. Medical gas piping and piping systems that must be installed to NFPA 99 requirements shall be tested according to NFPA 99. Repair or replaced piping portions that are defected or lose pressure. Repeat testing and repairing until the repaired or replaced piping does not lose pressure.

B. Testing Procedures:

a. All inline valves in full-open position during test. Do not include any instrumentation/devices such as gauges and relief valves that are not rated for the testing pressure.

b. Put temporary valves at air vents, drain points, and pressure gauges.

c. The piping may be tested in sections or total depending on the site requirements and as per the Owner/Architect's requirements.

d. Do not modify piping system during testing when it is pressurized including tightening leaking joints. All repairs, replacements must be after the pressure has been reduced to ambient.

e. Record the maximum test pressure and pressure loss during testing period while the system is pressurized but isolated from the pressure source.

f. Test piping systems: (1) at 125% their maximum allowable working pressure (MAWP) for non-hazardous liquid, inert gas, and compressed air systems, (2) at the following minimum test pressures if (2) is higher than (1):

i. Building Domestic CW/HW systems: 125 psig for 24 hours.

ii. Compressed air and vacuum systems: 150 psig for 4 hours using dry air or nitrogen. Pressure testing, to avoid damage and catastrophic failure, shall be done in increments of 100 psig, starting with 100 psig. Repair leaks after each increment. After final testing, piping shall be left pressurized at the system working pressure.

iii. Natural gas, and Nitrogen systems: 165 psig for 4 hours.

iv. Refrigerant piping systems: 300 psig on the high side, 150 psig on the low side for 24 hours using nitrogen only.

g. Submit copies of test records to the Client, indicating testing instrument and media used, which piping segments/systems not meeting the testing requirements.

h. For gas piping, purge the inert gas with fuel gas in accordance to NFPA 54 before placing gas piping in service.

DISINFECTING DOMESTIC WATER SYSTEM:

A. Contractor shall supply disinfecting agent and injecting apparatus necessary for disinfecting the all systems. Flush the domestic water systems completely by opening every outlets and operate every fixtures until clear and clean water flows from all fixtures.

B. Water mains:

a. Flush water mains if the specified "Cleaning and Flushing" requirement has not been performed. Where the flushing main supplies a fire supply sprinkler system, flow shall provide an NFPA 24 velocity of 10 ft/s.

b. Disinfect water mains in accordance with AWWA C651, "Disinfecting Water Mains", after completion of installation and test results confirming the system is free from leaks. Use the method of disinfection most appropriate for the project based on AWWA C651-92.

C. New interior potable water system:

a. Clean and sanitize all plumbing fixtures free from dirt, paint, contaminants, etc. Use anti-bacteria cleaning agents suitable for fixture surface types. Do not use abrasive cleaning agents or brushes that may damage fixture surfaces. Fixtures that are damaged thru cleaning process shall be replaced.

b. Flush piping system if the specified "Cleaning and Flushing" requirement has not been performed.

c. Chlorinate piping using water with free chlorine concentration not less than 25 mg/L for 24 hours, during which time lavatories, sinks, drinking fountains, showers, and hose bibs shall be operated to disinfect.

d. After the 24-hour duration, verify the treated water still have at least 10 mg/L free chlorine concentration.

e. Flush the system after the residual free chlorine concentration test. Flush with potable water until the chlorine concentration in piping is less than 1 mg/L.

i. System 20 gallons or less: Flush the chlorinated water to a sanitary waste water collection.

ii. System over 20 gallons or more: De-chlorinate the disinfection water prior to discharge into sanitary.

D. Determine the bacteriological quality by laboratory test after disinfection. Continue disinfection procedure until water samples produce satisfactory bacteriological result. In the case of existing re-used water heater(s), if the water heater tank(s) have been abandoned for a long duration, and standing water may contain bacteria, drain and flush the water heater tank(s) as stated in the pipe flushing procedure. Test the bacteriological quality of the tank water and disinfect the tank(s) as necessary.

E. Provide a certification of sterilization/chlorination to the Owner to demonstrate satisfactory disinfecting result. Include name and contact information of contractor who perform disinfectant procedure.

22 05 00 COMMON WORK FOR PLUMBING

Shop drawings:

Submit all fixtures, trim, equipment, specialties and insulation for review by Engineer-of-Record.

Operations and maintenance instructions:

Provide 3-copies of operation and maintenance manuals to Owner. Provide instruction on system operation to Owner's representatives.

Record drawings:

Within 90 days after the date of system acceptance, provide record drawings in AutoCad Format (using the same software and version the project was designed in), plus full size hard copy. Project designed in Autocad. Electronic drawings may be available from the Engineer for a fee. Record drawings shall include, as a minimum, the installed location and performance data on each piece of equipment and plumbing fixture. In addition, provide general configuration of all piping distribution systems, including sizes. For below grade sanitary piping, provide installed invert elevations.

Coordination:

Provide Electrical Contractor with electrical requirements of approved equipment in sufficient time to order panel boards, disconnects, and related appurtenances.

Access doors:

Provide Milcor Architectural Grade Flush Door, Standard Flush Door, Universal Fire Rated Insulated Door, or equal, for access to all valves, controls, water hammer arrestors, or other devices requiring maintenance. Doors shall match wall or ceiling rating. Galvanized steel in general applications, stainless steel in restrooms, hospitals, and laboratories. Minimum 16-20 gauge in general application, 10 gauge minimum in vandalism application. Architect must approve location and appearance of all access doors, prior to installation.

Sleeves and Firestops:

Provide metal sleeves where pipes or control wiring penetrate walls.

Firestop systems:

A. Combustible pipe penetrations through fire walls and floors: Firestop collars, Hilti CP 643N, CP 644, or approved equal. Intumescent firestop collar with galvanized steel housing and intumescent inserts for combustible pipes such as PVC, CPVC, ABS, PVDF, PP, and FRPP, suitable for water pipes, electrical conduits, plumbing piping, and mechanical piping. Collars shall be applicable for all common constructions including concrete floors, concrete over steel deck, concrete walls, concrete block walls, gypsum board walls, and wood floor assemblies. Size and install firestop systems in accordance with manufacturer's recommendations. Install collars on both sides of wall penetrations. Install one (1) collar below the top plate of floor. Secure collars using manufacturer's approved steel bolts or fasteners. Drywall screws are not acceptable. Firestop system shall be FM approved, UL 1479 listed, and tested in accordance with ASTM E 814.

22 05 19 PIPING SPECIALTIES

Heat tracing: Self regulating, 5 watt per linear ft, 120 volt cable equal to Chromalox SRL5-1. Provide splice and end seals as required. Use minimum 1 extra ft cable at each fitting, minimum 5 extra feet at each valve. Tape to pipe with Chromalox FT-1 fiberglas tape or equal on 1 ft intervals. Control heat tracing with ambient sensing Chromalox RTAS-1 microswitch; do not allow operation above 40 F outdoor temperature. Tracing and controls exposed to outside shall be suitable for outdoor use. Increase pipe insulation inside diameter to account for tape. Megger tape after installation and submit report. Electrical power shall have ground fault breaker.

Thermometers: ASTM E1, 7" minimum, 2° F accurate, red appearing mercury, lens front tube, adjustable joint with positive locking device. Scale shall be appropriate to service use.

22 05 29 HANGERS AND SUPPORTS

Pipe and equipment hangers and supports shall be per local code. All wall-hung plumbing fixtures shall be provided with concealed arms or wall supports. Verify wall chase sizes prior to purchasing concealed wall supports, and notify with Owner/Architect if concealed wall supports do not fit within wall chases.

Support all above floor piping utilizing support systems manufactured for the applicable installation. Wire or tape supports are not acceptable. Support horizontal cast iron pipe adjacent to each hub with 5 feet maximum spacing between hangers. Support vertical piping at every other floor. Support vertical cast iron pipe at each floor at hub. Support riser piping independently of connected horizontal piping. Where piping is installed in parallel at same elevation, provide multiple pipe or trapeze hangers. Use hangers with1-1/2" minimum vertical adjustment. Provide clearance in hangers and from structure and other equipment for installation of insulation. Where piping penetrates floor, ceiling, or wall, close off space between pipe and adjacent work with stuffing or firestopping insulation and caulk. Provide close fitting metal collar or escutcheon covers at both sides of penetrations.

Pipe Support Schedule (Refer to med gas 22 48 20 section and compressed air within 22 10 00 section for piping support criteria specific to systems):

Pipe Material	Max Hanger Spacing (Ft)	Hanger Rod Dia. (Inches)
Cast Iron (all sizes)	5	5/8
Copper ≤1-1/4"	6	1/2
Copper ≥1-1/2"	10	1/2
PVC (all sizes)	4	3/8
Steel ≤ 3"	12	1/2
Steel ≥ 4"	12	5/8

Provide 4" reinforced concrete housekeeping pad with chamfered edges for all floor or ground mounted equipment. Isolate all water piping from direct contact with structural members (studs, joists, beams, etc.) to prevent the transmission of sound.

Flash and seal equipment, pipe stacks, and roof penetrations.

22 05 48 VIBRATION ISOLATION

Inline circulating pump: suspend or support with rubber or spring isolators.

House pump: mount on vibration isolators.

22 05 73 PLUMBING COMPONENTS IDENTIFICATION

Equipment: permanent label (stencil, metal tag or engraved plastic) with unit tag or name and area or space served

Piping: provide Brady or Seton pipe markers every 20 feet. Identify service, flow direction, and pressure. Install in clear view and align with axis of piping

Valve tags: Install engraved metal tags with corrosion resistant chain. Number tags consecutively by location.

Valve Tag Chart: Typewritten letter size list in anodized aluminum, or plastic laminated, frame.

22 07 16 EQUIPMENT INSULATION

Flame spread less than 25; smoke developed less than 50 as per ASTM E84, NFPA 255, and UL273.

22 07 19 PIPING INSULATION

Provide piping insulation as indicated below. If different than the Energy Code insulation requirement, the more stringent standard shall be applied. All insulation must have flame spread less than 25 and smoke developed less than 50 as per ASTM E84, NFPA 255, and UL 273.

Minimum Required Pipe Insulation Thickness based on 2015 IECC:

Fluid Temp	Conductivity	Mean Temp	Nominal Pipe Size <1	1 to < 1.5	1.5 to < 4	4 to <8
141-200	0.25-0.29	125	1.5	1.5	2.0	2.0
105-140	0.21-0.28	100	1.0	1.0	1.5	1.5
40-60	0.21-0.27	75	0.5	0.5	1.0	1.0
<40	0.20-0.26	50	0.5	1.0	1.0	1.0

Provide galvanized sheet metal shields at all pipe hangers for pipes 1½" or larger. For pipe 4" and larger, provide high-density insulation (calcium silicate) inserts at hangers.

Domestic cold water in exterior walls, attics above building insulation, or other areas subject to freezing - 1" fiberglass.

Domestic hot water - For pipe sizes 1½" or less, provide 1½" fiberglass insulation with all-service jacket. 2" and larger, provide 2" fiberglass insulation with all-service jacket.

Insulate all exposed drain and water supply piping beneath handicap accessible sinks with closed cell insulating kit as manufactured by 'Truebro' or equal by 'McGuire.

Floor drains receiving condensate from HVAC units or ice machines shall be insulated minimum 5-feet downstream of drain.

22 10 00 PLUMBING PIPING

Domestic hot/cold - Above Grade, Inside Building: ASTM B88 Type "L" copper with wrought copper or cast bronze fittings using lead-free soldered joints. Or, press fit type copper fittings, up to 4" diameter and meeting ASME B16.18 and B16.22. Alternatively copper, or galvanized, grooved piping materials may be used with Engineer approval. System shall be drainable.

Domestic hot/cold - Below Grade, Inside Building: ASTM B88 Annealed (soft) copper tubing, type "K", with no joint or fitting below slab.

Domestic hot/cold - Above Grade, Outside Building: ASTM B88 Type "K" copper with wrought copper fittings and solder joints. Provide 1 inch thick molded fiberglass insulation covered with aluminum jacket.

Domestic hot/cold - Below Grade, Outside Building: Sizes 2-1/2" and smaller: ASTM B88 Type "K" copper with wrought copper fittings and lead-free brazed joints. Sizes 3" and larger: Cast iron pipe 150 psi class with bell and spigot class C cast iron or ASTM A-53 steel pipe, hot-dipped mechanical fittings, or schedule 40 PVC pressure rated for water service with solvent welded joints, PVC-1120, ASTM D-1785. PVC is only allowed for domestic water service line. Do not use PVC for water distribution lines.

Waste and vent -

a. Above ground: ASTM A74 cast iron pipe, with DWV no-hub fittings conforming to CISPI 301, neoprene gaskets, and stainless steel clamps. No-hub clamps shall be manufactured by 'Tyler Pipe,' 'Clamp-All,' 'Husky,' or 'Mission.' Transitions between under-slab PVC and above slab cast iron shall be as detailed on plans.

b. Below ground: Schedule 40 PVC, solvent welded joint ends.

NOTE: Plastic piping of any type may not be used for any plumbing piping system when the piping is routed within a ceiling plenum used as a return air plenum.

Compressed air - All compressed air piping must have pressure have pressure rating equal to or exceeding the system maximum operating pressure at maximum operating temperature. Mount piping along walls or next to structure for supports, and allow for thermal expansion or sudden changes in pressure. In addition, piping shall be supported at all changes in direction and load concentrations such as heavy valves. All main and branch lines shall be pitched at 1" per 10 ft in the direction of air flow.
Above grade inside building - Schedule 40 black iron. Copper with brazing joints. Aluminum, extruded, with push-lock fittings and dual O-ring clamping system. Use corrosion resistant piping for lubricant free compressors.
Above grade outside building - Schedule 10 stainless steel with welded joints. Copper with brazing joints.

Maximum supporting span for compressed air:

Diameter(in)	Schd 40 Steel	Type K Copper
½	5'-0"	3'-9"
3/4	5'-9"	4'-3"
1	6'-6"	5'-0"
1-1/2	7'-6"	5'-9"
2	8'-6"	6'-6"
2-1/2	9'-3"	7'-3"
3	10'-3"	7'-9"
3-1/2	11'-0"	8'-3"
4	11'-6"	9'-0"
5	12'-9"	10'-0"
6	13'-9"	10'-9"
8	15'-6"	
10	17'-0"	
12	18'-3"	

Testing: upon completion of construction, all domestic water piping shall be thoroughly flushed, tested, and sterilized per section 22 01 11. Submit test records and certificates of sterilization for Engineer review.

Make connections between dissimilar piping materials with adaptors manufactured for the applicable type of transition.

Provide dielectric isolation device (dielectric union or coupling) where copper lines connect to ferrous lines or equipment.

Support piping per Spec Section 220529. When installing non-insulated copper pipe, use copper hangers or tape at contact point.

All piping penetrations through floors shall be sealed with UL listed firestop. Refer to Plumbing General Notes.

21 11 00 RECLAIMED WATER SYSTEMS Provide reclaimed water system as indicated on the drawing plans. Provide schedule 80 PVC with solvent welded joints. All floor drains emptying into the reclaim tanks shall be piped to go below the water level within the tanks. All piping must be protected from freezing. Position tanks so that plumbing is below frost lines. Follow tank manufacturer instructions for standards applicable to project. All horizontal pipes must be run below the frost line. Seal all tank penetrations to prevent leakage into soil. Provide sand/oil separator per the local jurisdiction plumbing code. Provide back water valve to prevent sewage backup into the reclaim tanking system. Where the reclaimed water pressure exceeds 80 psi static, a pressure-reducing valve (PRV) shall be installed to reduce the pressure to 80 psi. Piping shall be pressure tested at least 24 hours prior to pouring concrete. The system shall be water pressure tested not less than the system working pressure, but no less than 30 psi, or air pressure tested no less than 50 psi for piping systems other than plastic. Upon completion, inspect all backflow prevention assemblies and air gaps for proper operation and adequate gaps. Testing procedure(s) of backflow prevention assemblies shall comply with ASSE standards approved by the plumbing codes adopted by the local jurisdictions. Contractor shall notify Owner in writing that annual inspection is required for backflow prevention devices.

The following shall not be piped into the reclaim system: domestic sewer lines (sinks/toilets); backwash from carbon tanks, regeneration from softeners, blowdown from compressors or boilers, drains from service/detail bays and where tire shine is applied.

Support piping per Spec Section 220529.

Vent pipes from reclaim tank shall be terminated outside above the water line in the reclaim tank(s), typically at roof level.

Fixture Water Usage: Fixtures shall be certified to meet the water saving performance standards of texas civil statutes section 337.252 and shall be listed with the State as complying with such. All fixtures shall comply with the more restrictive of ANSI or the following (when tested per ANSI testing procedure):

a. Maximum flow from sink or lavatory faucet or faucet aerator shall be 2.20 gallons per minute (g.p.m.) at a pressure of 60 psi.

b. Maximum flow from a shower head shall be 2.75 g.p.m. at press. of 80 psi.

c. Maximum volume of water per flush from a urinal and associated flush valve shall not exceed 0.5 gallon

d. Maximum volume of water per flush from a toilet shall not exceed **1.25** gallons.

Watson Consulting Engineers, PLLC
P.O. BOX 721206
Houston, Texas 77272
(832) 860-5237
ctang@watsonengineers.com
TEXAS FIRM REG #: 17751

ALTAR GROUP
ARCHITECTURE ENGINEERING

SEAL:

STATE OF TEXAS
CHAU THANH N. TANG
83415
LICENSED
PROFESSIONAL ENGINEER
02/21/25

CONSULTANTS:

TAKE 5 OIL CHANGE
PROTOTYPE: 3 BAY
5331 WALZEM ROAD
SAN ANTONIO, TX 78218

REV	DATE	DESCRIPTION
1	11/28/24	ISSUE FOR PERMIT
2	02/21/25	RE-ISSUE FOR PERMIT

DRAWN BY:
CHECKED BY:
ARCH. PROJECT NO.: DB24-023
SHEET NAME: PLUMBING SPECIFICATION
SHEET NUMBER: P-401

File Name: C:\Users\chaut\appdata\local\temp\AcPublish_26516\202411-043 T50 SA 6630 WALZEM_24-023 MP.DWG
User: chaut
Date/Time: Feb 21, 2025 - 12:19pm Xref File(s): (DIESEL evaluation failed)

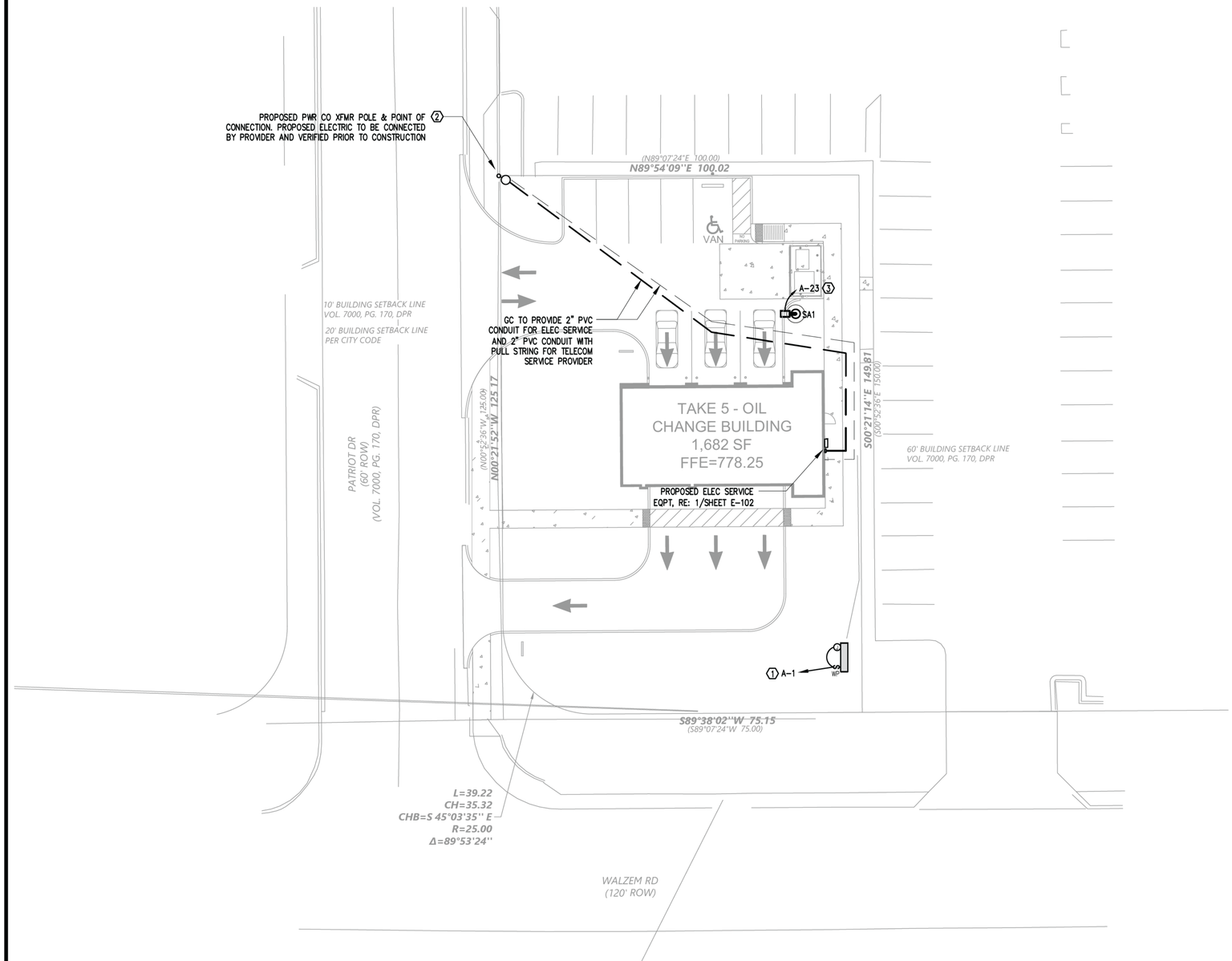

N

1 **ELECTRICAL SITE PLAN**
1/16" = 1'-0"

POWER & COMMUNICATION UTILITY SERVICES

1. CONTRACTOR SHALL REVIEW THE SITE PLAN(S) AND THE ELECTRICAL ONE LINE RISER DIAGRAM AND VERIFY THE REQUIREMENTS FOR PROVIDING ELECTRIC SERVICE TO THE BUILDING. CONTRACTOR SHALL MEET WITH THE ELECTRIC UTILITY COMPANY REPRESENTATIVE (THE REP) PRIOR TO COMMENCING SERVICE WORK. VERIFY/ CONFIRM WITH THE REP THAT PROPOSED ELECTRIC SERVICE EQUIPMENT IS NOT INSIDE ANY UTILITY EASEMENT. COORDINATE RELOCATION OF CUSTOMER'S SERVICE EQUIPMENT OUTSIDE OF EASEMENT AREA AS REQUIRED. DETERMINE WHAT WORK WILL BE PERFORMED BY THE POWER COMPANY AND WHAT WORK WILL BE PERFORMED BY THE CONTRACTOR. OBTAIN COPIES OF APPROPRIATE DETAILS, STANDARDS AND INSTRUCTIONS. UTILITY LOCATIONS SUBJECT TO CHANGE DURING THIS COORDINATION. ALL CHANGES MUST BE ACCOUNTED FOR IN THE BID. NO ADDITIONAL FUNDS WILL BE PROVIDED FOR FAILING TO COORDINATE THIS WORK. REQUEST THE AMOUNT OF ANY UTILITY CHARGES TO BE CHARGED TO THE PROJECT. INCLUDED THESE COSTS IN THE BID.

2. PROVIDE ALL EQUIPMENT, MATERIALS, LABOR, SUPERVISION, AND SERVICES NECESSARY FOR OR INCIDENTAL TO THE INSTALLATION OF ELECTRICAL SERVICE AS DIRECTED BY THE UTILITY COMPANY.

3. WORK SHALL INCLUDE BUT NOT LIMITED TO THE FOLLOWINGS:

   A. FURNISH AND INSTALL UNDERGROUND CONCRETE ENCASED PRIMARY CONDUITS. QUANTITY & SIZE PER POWER CO. STANDARDS.

   B. FURNISH AND INSTALL CONDUITS, WIRES, TRANSFORMER PADS AND METERING EQUIPMENT TO PROVIDE AN ELECTRICAL SERVICE ENTRANCE AS SHOWN ON THE DRAWINGS AND/OR SPECIFIED HEREIN. COORDINATE WORK WITH THE POWER AND COMMUNICATION UTILITY COMPANIES. VERIFY ALL REQUIREMENTS, AND INSTALL SERVICE ENTRANCE EQUIPMENT IN EXACT COMPLIANCE WITH UTILITY COMPANY AND LOCAL GOVERNMENTAL AGENCY REQUIREMENTS.

   C. ARRANGE WITH THE UTILITY COMPANIES TO INSPECT THE WORK.

   D. INCLUDE IN THE BID, ALL UTILITY COMPANY CHARGES AND COSTS RELATED TO THE INSTALLATION OF THE SERVICES (TELEPHONE, CABLE TV, AND ELECTRIC).

KEYED NOTES

1. PYLON SIGNAGE TO BE CONTROLLED VIA ASTRONOMIC 4-CIRCUIT TIMECLOCK. FIELD VERIFY EXACT PYLON SIGNAGE LOCATION AND INSTALLATION REQUIREMENTS WITH OWNER/ARCH. ELECTRICAL CONNECTION FOR PYLON SIGNAGE TO BE PROVIDED BY G.C.

2. POWER COMPANY MAY CHOOSE TO PROVIDE SERVICE FROM A DIFFERENT LOCATION. CONTRACTOR SHALL INCLUDE IN HIS/HER BID A MINIMUM OF 250FT OF SERVICE LATERAL CONDUIT/WIRES FROM POWER CO TRANSFORMER TO POWER CO METER. SERVICE LATERAL CONDUIT SHALL BE MINIMUM 2", PROVIDE PULL STRING.

3. PROVIDE TIMESWITCH CONTROL FOR POLE LIGHTING.

Watson Consulting Engineers, PLLC
P O BOX 721206
Houston, Texas 77272
(832) 860-5237
ctang@watsonengineers.com
TEXAS FIRM REG#: 17751

ALTAR GROUP
ARCHITECTURE
ENGINEERING

SEAL:

STATE OF TEXAS
CHAU THANH N. TANG
83415
LICENSED
PROFESSIONAL ENGINEER
02/20/25

CONSULTANTS:

TAKE 5 OIL CHANGE
PROTOTYPE: 3 BAY
5331 WALZEM ROAD
SAN ANTONIO, TX 78218

REV	DATE	DESCRIPTION
1	11/26/24	ISSUE FOR PERMIT
2	02/21/25	RE-ISSUE FOR PERMIT

DRAWN BY:
CHECKED BY:
ARCH. PROJECT NO.: DB24-023
SHEET NAME: **ELECTRICAL SITE POWER & LIGHTING PLAN**
SHEET NUMBER: **E-101**

File Name: P:\Projects\Altar Group\202411-043 Take 5 Oil San Antonio Walzem (24-023)\ARCH202411-043 XREF TB.DWG
User: MC-OFFICE
Date/Time: Feb 20, 2025 - 10:30am
Xref File(s):

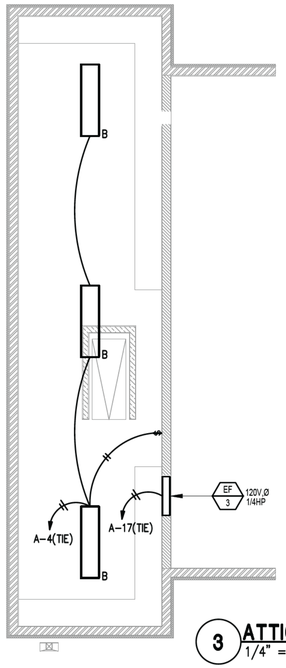

3 **ATTIC PLAN**
1/4" = 1'-0"

SEE SHEET E-401 FOR LIGHTING FIXTURE SCHEDULE

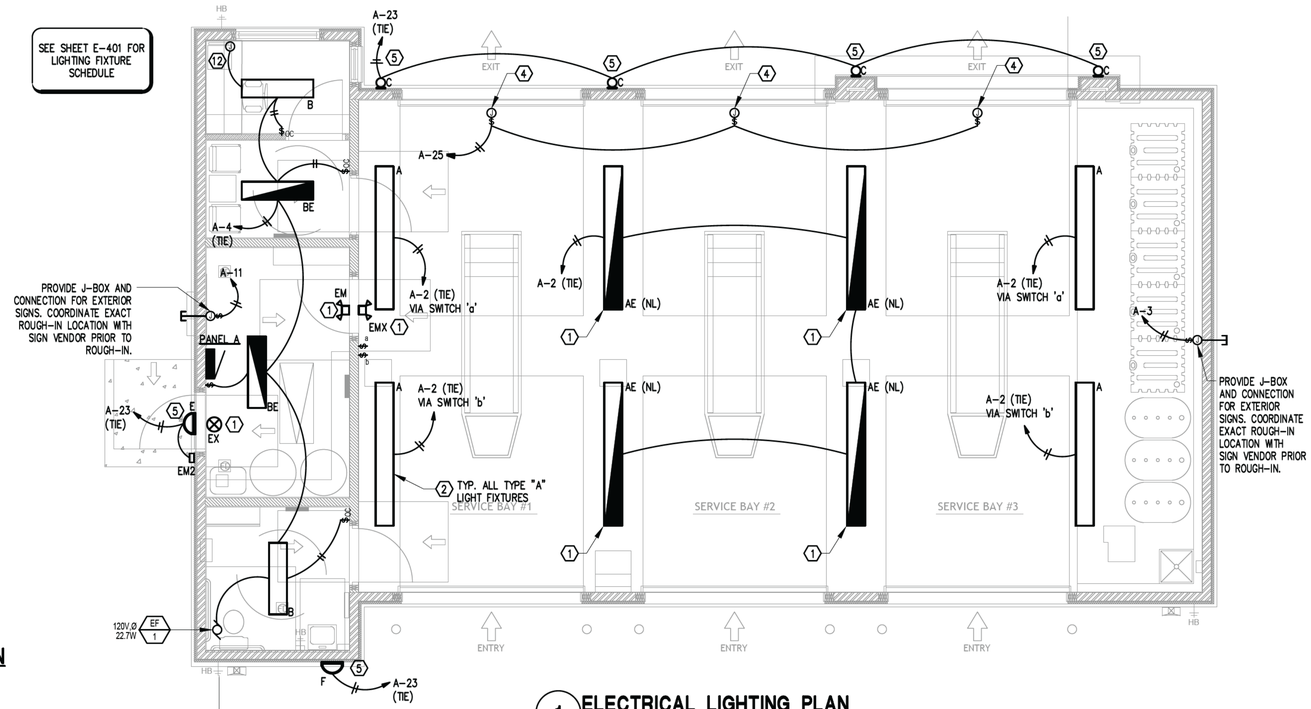

1 **ELECTRICAL LIGHTING PLAN**
1/4" = 1'-0"

NOTE:
ALL RECEPTACLES IN SERVICE BAY AREAS SHALL BE GFCI PROTECTED.

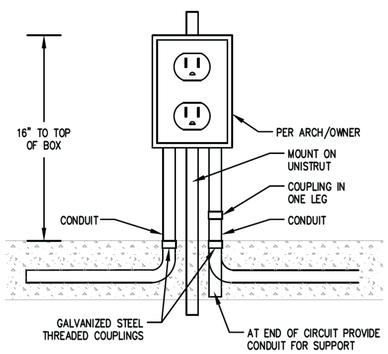

4 **RECEPTACLE STUB-UP DETAIL**
N.T.S.

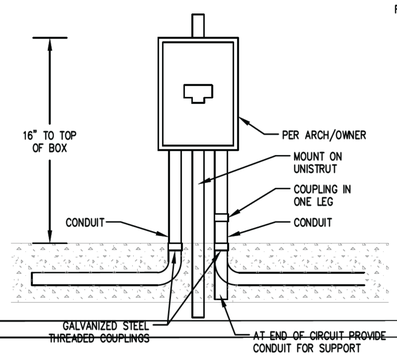

5 **DATA OUTLET STUB-UP DETAIL**
N.T.S.

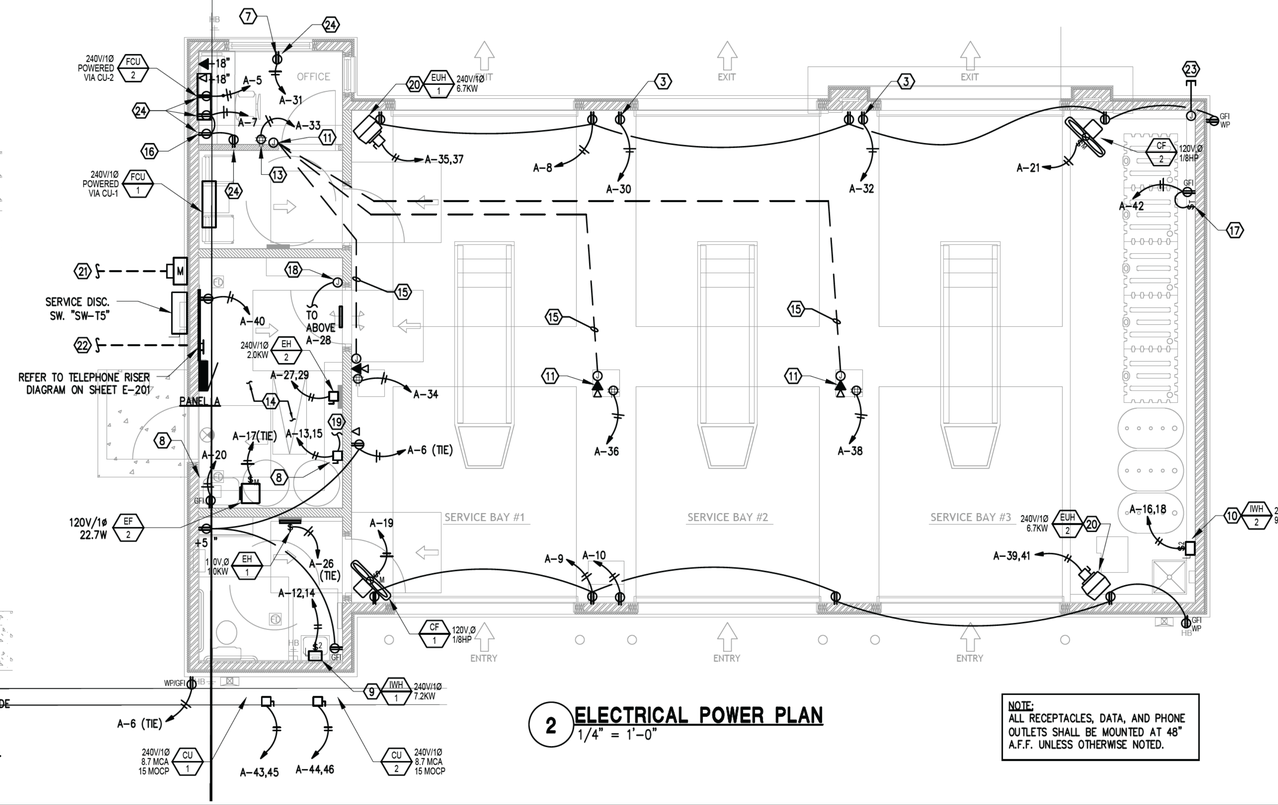

2 **ELECTRICAL POWER PLAN**
1/4" = 1'-0"

NOTE:
ALL RECEPTACLES, DATA, AND PHONE OUTLETS SHALL BE MOUNTED AT 48" A.F.F. UNLESS OTHERWISE NOTED.

KEYED NOTES

1. ALL EXIT, NIGHT LIGHT, AND EMERGENCY LIGHT FIXTURES SHALL BE CIRCUITED TO AN UNSWITCHED LEG OF THE NEAREST LOCAL LIGHTING CIRCUIT.
2. COORDINATE EXACT FINAL LOCATION OF THESE LIGHT FIXTURES WITH GC SO THAT LIGHTS ARE OVER WINDOWS IN ROLL UP DOORS WHEN IN OPEN POSITION.
3. 20A 120V RECEPTACLE FOR MISCELLANEOUS USE. COORDINATE FINAL LOCATION OF RECEPTACLE WITH OWNER.
4. PROVIDE J-BOX BEHIND FASCIA FOR BUILDING SIGN. FIELD COORDINATE FINAL SIGN LOCATION WITH ARCHITECTURAL ELEVATIONS AND SIGN VENDOR. E.C. SHALL MAKE FINAL CONNECTIONS TO BUILDING SIGN. (TYPICAL 3 PLACES)
5. LIGHT FIXTURE TO BE CONTROLLED BY TIME CLOCK.
6. NOT USED
7. PROVIDE RECEPTACLE ABOVE WINDOW FOR "OPEN" SIGN. VERIFY MOUNTING HEIGHT PRIOR TO ROUGH-IN (IN CEILING).
8. LOCATE AIR COMPRESSOR DISCONNECT (30A/2P W/ 30A FUSES, MINIMUM #10 CONDUCTORS) IN BACK ROOM ADJACENT TO OR NEAR COMPRESSOR. 240V, 30 AMP, SUITABLE FOR MOTOR CONTROL. FIELD VERIFY EXACT INSTALLATION LOCATION W/ OWNER/ARCH.
9. PROVIDE DISCONNECT SWITCH UNDER SINK FOR INSTANTANEOUS WATER HEATER, "IWH-1". 7.2 KW @ 240V, 1ø
10. PROVIDE DISCONNECT SWITCH NEAR SINK FOR INSTANTANEOUS WATER HEATER, "IWH-2". 9.6 KW @ 240V, 1ø
11. PROVIDE (2) 3/4" CONDUIT BACK TO DATA ROUTER. PROVIDE DEDICATED 3/4" CONDUIT FOR EACH DATA RUN BACK TO ROUTER. ROUTE BELOW SLAB AND TURN UP AT ROUTER. PROVIDE JUNCTION BOX AT ROUTER. FIELD VERIFY EXACT LOCATION AND CONDUIT ROUTING PRIOR TO INSTALLATION. ALL CABLES & CONDUITS FOR DATA SHALL BE RUN AND TERMINATED BY G.C.
12. PROVIDE JUNCTION BOX FOR CAN LIGHT FIXTURE.
13. PROVIDE DUPLEX RECEPTACLE IN CEILING FOR DATA ROUTER. FIELD VERIFY EXACT LOCATIONS PRIOR TO INSTALLATION.
14. ATTIC ABOVE. SEE DETAIL THIS SHEET.
15. 3/4" CONDUIT TO DATA ROUTER IN OFFICE.
16. PROVIDE RECEPTACLE IN CEILING FOR DVR. VERIFY MOUNTING PRIOR TO ROUGH-IN.
17. MANUAL TIMER FOR WASTE OIL PUMP. VERIFY WITH OWNER THE EXACT LOCATION OF TIMER AND RECEPTACLE.
18. PROVIDE CONDUIT OVERHEAD FOR J-BOX AND DEVICE BOXES. COORDINATE EXACT DROP LOCATIONS WITH ARCHITECT/OWNER PRIOR TO COMMENCING WORK.
19. ROUTE TO ADJACENT AIR COMPRESSOR. FIELD VERIFY LOCATION AND CONDUIT ROUTING.
20. PROVIDE 60A/2P DISCONNECT SWITCH W/ 40A FUSES. PROVIDE (2)-#8 & (1)-10 GND. IN 1"C.
21. INCOMING 2" CONDUIT FOR ELECTRICAL SERVICE – SEE SHEET E-201 FOR MORE INFORMATION. COORDINATE EXACT LOCATIONS & REQUIREMENTS WITH CIVIL/ARCHITECTURAL DRAWINGS.
22. INCOMING (2)-2" CONDUIT FOR TELE/DATA SERVICE(S) – SEE SHEET E-201 FOR MORE INFORMATION. COORDINATE EXACT LOCATIONS & REQUIREMENTS WITH CIVIL/ARCHITECTURAL DRAWINGS. INCLUDE CAT 5 CABLE WITH ENDS. INSTALLED BY G.C.
23. J-BOX FOR LANDSCAPE CONTROLLER. COORDINATE REQUIREMENTS WITH OTHER DISCIPLINES. CONNECT TO NEAREST GENERAL POWER CIRCUIT.
24. ALL DUPLEX RECEPTACLES IN OFFICE SHALL BE LEVITON #TBR20-S1W OR APPROVED EQUAL, PROVIDING ONE OUTLET MARKED AS "CONTROLLED". ALL CONTROLLED OUTLETS IN OFFICE SHALL BE HOMERUN TO PANEL VIA SWITCHPACK OPERATED BY THE SAME OCCUPANCY SENSOR CONTROLLING ROOM LIGHTS.

ELECTRICAL NOTES FOR SERVICE BAYS

BUILDING IS CONSIDERED A "MINOR REPAIR GARAGE" PER NEC ARTICLE 511.3 FLAMMABLE LIQUIDS HAVING A FLASH POINT BELOW 38C (100F) SUCH AS GASOLINE, OR GASEOUS FUELS SUCH AS NATURAL GAS OR HYDROGEN, WILL NOT BE DISPENSED OR TRANSFERRED.

ACCORDING TO NEC ARTICLE 511.3(C), THE FOLLOWING LOCATIONS IN THE SERVICE AREAS SHALL BE CONSIDERED CLASS I DIVISION 2 LOCATIONS:
1) FLOOR AREAS UP TO A LEVEL OF 18" ABOVE THE PITS AND EXTENDING A DISTANCE 3' HORIZONTALLY FROM THE EDGE OF ANY PIT.
2) PIT AREAS UP TO THE FLOOR LEVEL.

NOTE: CEILING AREAS ARE UNCLASSIFIED SINCE LIGHTER THAN AIR GASSES (SUCH AS NATURAL GAS AND HYDROGEN) WILL NOT BE TRANSFERRED.

ALL ELECTRICAL WORK IN THESE CLASSIFIED AREAS SHALL CONFORM TO ARTICLE 511 FOR CLASS I DIVISION 2 LOCATIONS.

PROVIDE SEALS IN CONDUIT AND CABLE SYSTEMS PER ARTICLE 501 IN CLASSIFIED AREAS.

NOTE: OFFICE, RESTROOM AND OIL STORAGE AREAS ARE UNCLASSIFIED SINCE WALLS ARE USED TO EFFECTIVELY CUT OFF/SEPARATE THESE ROOMS FROM AREAS WHERE FLAMMABLE VAPORS ARE LIKELY TO BE RELEASED AND THESE AREAS ARE TYPICALLY OUTSIDE THE 3' HORIZONTAL DISTANCE FROM PIT EDGE.

Watson Consulting Engineers, PLLC
P O BOX 721206
Houston, Texas 77272
(832) 860-5237
ctang@watsonengineers.com
TEXAS FIRM REG#: 17751

ALTAR GROUP
ARCHITECTURE ENGINEERING

SEAL:

STATE OF TEXAS
CHAU THANH N. TANG
83415
LICENSED
PROFESSIONAL ENGINEER
02/20/25

CONSULTANTS:

TAKE 5 OIL CHANGE
PROTOTYPE: 3 BAY
5331 WALZEM ROAD
SAN ANTONIO, TX 78218

REV	DATE	DESCRIPTION
1	11/26/24	ISSUE FOR PERMIT
2	02/21/25	RE-ISSUE FOR PERMIT

DRAWN BY:
CHECKED BY:
ARCH. PROJECT NO.: DB24-023
SHEET NAME: **ELECTRICAL POWER & LIGHTING PLANS**
SHEET NUMBER **E-102**

File Name: P:\Projects\Altar Group\202411-043 Take 5 Oil San Antonio Walzem (24-023)\ARCH202411-043 XREF TB.DWG
User: MC-Office
Date/Time: Feb 20, 2025 – 10:30am
Xref File(s):

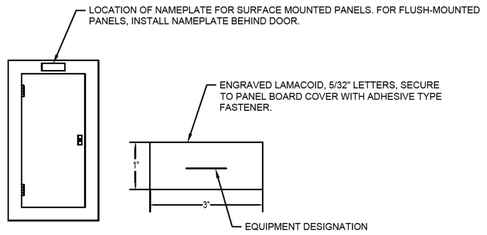

NOTE:
NAMEPLATES ARE REQUIRED ON ALL SWITCHBOARDS, DISTRIBUTION PANELS, PANEL BOARDS, STARTERS, DISCONNECT SWITCHES, RELAYS AND JUNCTION BOXES GREATER THAN 4 11/16" SQUARE. ALSO PROVIDE NAMEPLATES ON BRANCH SWITCHES OF SWITCHBOARDS AND DISTRIBUTION PANELS.

STANDARD COLORS:
1. NORMAL POWER - BLACK BACKGROUND, WHITE LETTERS
2. EMERGENCY POWER - RED BACKGROUND, WHITE LETTERING
3. IN ADDITION TO THE FUNCTION NAMEPLATE, PROVIDE NAMEPLATES IDENTIFYING ALL "MAIN SERVICE NAMEPLATE DISCONNECTS" - RED BACKGROUND - WHITE LETTERING

NAMEPLATE DETAIL
N.T.S.

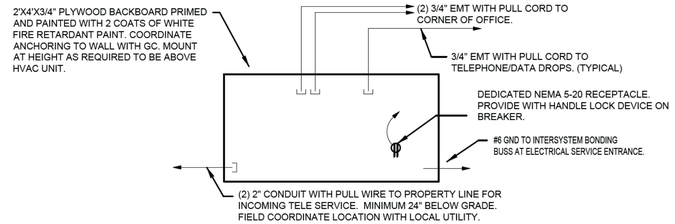

TELEPHONE RISER DIAGRAM
N.T.S.

PANELBOARD NOTES

- ALL BREAKERS SHALL BE 20A/1P, UNLESS NOTED OTHERWISE.
- ALL BREAKERS SHALL BE HACR RATED.

NOTE: NOT ALL NOTES BELOW MAY APPLY TO THIS PROJECT.

1. "1" INDICATES BREAKER SHALL BE "SWD" RATED.
2. "2" INDICATES BREAKER SHALL BE COMBINATION "ARC-FAULT / GFI" TYPE.
3. "3" INDICATES BREAKER SHALL BE "GFI" TYPE, WITH RATING AS REQUIRED BY NEC PER APPLICATION. PROVIDE 5mA RATING FOR PERSONNEL PROTECTION. PROVIDE 30mA RATING FOR EQUIPMENT PROTECTION.
4. "4" INDICATES BREAKER SHALL BE SHUNT-TRIP TYPE.
5. "5" INDICATES BREAKER TO BE "ARC-FAULT" TYPE.
6. "6" INDICATES BREAKER TO HAVE LOCK-ON CLIP.
7. "7" INDICATES BREAKER TO HAVE LOCK-ON CLIP AND RED MARKING.
8. "8" INDICATES CIRCUIT TO HAVE REMOTE 5mA GFI PROTECTION MODULE MOUNTED IN JUNCTION BOX WITH HINGED COVER ADJACENT TO PANELBOARD. MODULE SHALL BE LABELED AS TO THE CIRCUIT AND EQUIPMENT THAT IS BEING PROTECTED.
9. "9" INDICATES BRANCH CIRCUIT ROUTED THROUGH EMERGENCY LIGHTING INVERTER.
10. "10" INDICATES TO FURNISH AND INSTALL HANDLE TIES FOR MULTIPLEXED CIRCUITS.

"TC" INDICATES DESIGNATION OF TIMECLOCK CONTROLLING CIRCUIT.

PANELBOARD DESIGNATION A

120/240 VOLTS, 1 PH., 3 WIRE SOLID NEUTRAL
225 AMPERE BUS, 225 AMPERE MAIN C.B.
SPECIAL REQUIREMENTS: SERVICE ENTRANCE RATED
MOUNTING: FLUSH ___ SURFACE X

CKT NO.	KVA	DESCRIPTION	A	B	DESCRIPTION	KVA	CKT NO.	
TC 1	1.2	PYLON SIGN	1.9		LTS - SERVICE BAYS	0.7	2	TC
PC 3	1.0	SIGN	1.5		LTS - SUPPORT	0.5	4	TC
3 5	0.4	REC - IG WORK #3	0.9		REC - SERVICE/RR	0.5	6	3
3 7	0.6	REC - OFF SUPPLIES	1.4		REC - SERVICE/RR	0.8	8	3
3 9	1.0	REC - SERVICE	2.2		REFRIGERATOR	1.2	10	3
PC 11	1.0	SIGN	4.6	40	IWH-1	3.6	12	
13	1.6	AIR COMPRESSOR	5.0	30		3.6	14	
15	1.6		5.4	50	IWH-2	4.8	16	
17	0.7	EF-2 & EF-3	5.5			4.8	18	
19	0.5	CF-1	1.0		REC - STORAGE	0.5	20	3
21	0.5	CF-2	0.5		SPARE	-	22	
TC 23	0.2	LTS EXTERIOR	0.2		SPARE	-	24	
TC 25	1.2	BLDG SIGNAGE	2.2		EH-1	1.0	26	
27	1.0	EH-2	1.2		J-BOX IN ATTIC	0.2	28	
29	1.0		1.2		REC	0.2	30	3
TC 31	0.4	REC - "OPEN" SIGN	0.6		REC	0.2	32	3
33	0.4	ROUTER	0.8	40	REC - WORKSTATION	0.4	34	
35	3.3	EUH-1	3.7		REC - WORKSTATION	0.4	36	
37	3.3		3.7	40	REC - WORKSTATION	0.4	38	
39	3.3	EUH-2	3.5		REC - TELEPHONE BOARD	0.2	40	
41	3.3		3.8	15	WASTE OIL PUMP	0.5	42	
43	1.0	FCU-1/CU-1	2.0	15	FCU-2/CU-2	1.0	44	
45	1.0		2.0			1.0	46	
47	-	SPARE	-		SPARE	-	48	
49	-	SPARE	-		SPARE	-	50	
51	-	SPARE	-		SPARE	-	52	
53	-	SPARE	-		SPARE	-	54	
		KVA SUB TOTALS	29.7	26.1				

TOTAL CONNECTED LOAD 55.8 KVA

CONTRACTOR SHALL PERFORM SHORT CIRCUIT & ARC FLASH HAZARDS CALCULATIONS AND PROVIDE PERMANENTLY AFFIXED LABEL ON SERVICE EQUIPMENT AT TIME OF INSTALLATION, INDICATING THE AVAILABLE FAULT CURRENT AND THE DATE OF CALCULATION. LABEL SHALL BE 2" X 3" IN SIZE AND BLUE LETTERING ON CONTRASTING BACKGROUND. THIS LABEL SHALL ALSO INCLUDE THE DATE OF CALCULATION.
IN ADDITION TO THE ABOVE LABEL, PROVIDE A SIMILAR LABEL TO WARN PERSONS OF POTENTIAL ELECTRIC ARC FLASH HAZARDS, IN COMPLIANCE WITH NEC 110.16.

ELECTRICAL SERVICE LOAD SUMMARY
120/240V 1Ø, 3W SUPPLY

DESCRIPTION	ACTUAL CONNECTED KW/KVA	POWER FACTOR	N.E.C. CONNECTED KW/KVA	N.E.C. DEMAND FACTOR	N.E.C. DEMAND KVA
LIGHTING	1.4	1.00	1.4	1.25	1.8
RECEPTACLES	6.1	1.00	6.1	1.0 < 10KW 0.5 REMAINING KW	6.1
MOTORS	1.7	1.00	1.7	1.25	2.125
HVAC	20.5	1.00	16.2****	1.00****	16.2
WATER HEATER	16.8	1.00	16.8	1.00	16.8
MISCELLANEOUS	9.3	1.00	9.3	1.00	9.3
TOTAL	55.8		51.5		52.325

NOTES
* KITCHEN EQUIPMENT LOAD IS CALCULATED USING DEMAND FACTORS LISTED IN NEC TABLE 220.56
** N.E.C. ARTICLE 220.43 REQUIREMENT (200VA PER FOOT OF SHOW WINDOW) MINUS ACTUAL INSTALLED SHOW WINDOW LIGHTING VA.
*** BASED ON CURRENT LIMITING DEVICES
**** LOAD CALCULATIONS BASED ON MCA, NON-COINCIDENT HEATING LOADS LARGER THAN COOLING LOADS

$\frac{\text{N.E.C. DEMAND KVA} \times 1000}{\text{SYSTEM VOLTAGE}}$ = MINIMUM FEEDER AMPERAGE

$\frac{52.235 \times 1000}{240} = 218.02$

NEW 225A SERVICE @ 120/240V/1Ø

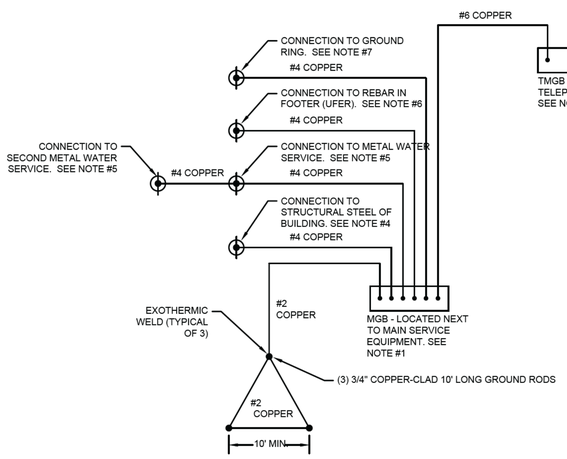

NOTES:
1. MGB (MAIN GROUND BAR) SHALL BE ERICO #EGBA14412- - (INCLUDES MOUNTING BRACKET AND INSULATORS; HOLE PATTERN AS REQUIRED FOR INSTALLATION, INCLUDING SPARE HOLES FOR FUTURE USE.) OR EQUAL BY HARGER. USE PRESSURE CONNECTORS (LISTED FOR GROUNDING) TO CONNECT COPPER WIRE TO MGB.
2. TMGB (TELECOMMUNICATION MAIN GROUND BAR) SHALL BE ERICO #TMGBA12L15PT (INCLUDES MOUNTING BRACKET AND INSULATORS) OR EQUAL BY HARGER. USE PRESSURE CONNECTORS (LISTED FOR GROUNDING) TO CONNECT COPPER WIRE TO TMGB.
3. NOT USED.
4. ~~STRUCTURAL STEEL MUST BE USED AS A GROUNDING ELECTRODE WHERE IT IS EFFECTIVELY GROUNDED PER~~ NEC SECTION 250.52.
5. WHERE A WATER METER OR FILTERING EQUIPMENT IS IN THIS METAL WATER PIPING SYSTEM, IT MUST BE BONDED AROUND TO MAINTAIN CONTINUITY EVEN IF THE WATER METER OR FILTER IS REMOVED PER NEC SECTION 250.52.
6. THE REBAR MUST NOT BE LESS THAN 20 FEET IN LENGTH AND 1/2" IN DIAMETER OR 20 FEET OR MORE OF BARE COPPER CONDUCTOR NOT SMALLER THAN NO. 4 IN THE BOTTOM OF THE FOOTER PER NEC SECTION 250.52.
7. GROUND RING SHALL BE A BARE COPPER CONDUCTOR, NOT SMALLER THAN NO. 2 AND AT LEAST 20 FEET LONG. THE CONDUCTOR MUST "ENCIRCLE" THE BUILDING OR STRUCTURE AND BE BURIED NOT LESS THAN 2-1/2 FEET DEEP PER NEC SECTION 250.52.

GROUNDING DETAIL
N.T.S.

ONE-LINE DIAGRAM NOTES

1. THE ELECTRICAL CONTRACTOR SHALL VERIFY ALL POWER COMPANY REQUIREMENTS PRIOR TO BIDDING & INCLUDE THE COST OF ALL ASSOCIATED LABOR, MATERIALS, & CHARGES IN HIS BID.
2. THE ELECTRICAL CONTRACTOR SHALL VERIFY THE AVAILABLE FAULT CURRENT WITH THE UTILITY COMPANY PRIOR TO BIDDING AND PROVIDE EQUIPMENT RATED ACCORDINGLY. SUBMIT FAULT CURRENT CALCULATIONS WITH SHOP DRAWING SUBMITTAL.
3. ALL BUSSING SHALL BE COPPER.
4. PROVIDE FULL LENGTH VERTICAL BUSSING IN ALL PANELBOARDS.
5. ALL CIRCUIT BREAKERS SHALL BE BOLT-ON TYPE.
6. ALL WALL-MOUNTED EQUIPMENT SHALL BE MOUNTED ON 3/4" FIRE RATED BACKBOARD.
7. PROVIDE NAMEPLATES PER NAMEPLATE DETAIL.
8. COORDINATE SPACE WITH ALL OTHER TRADES TO MAINTAIN ALL CODE- REQUIRED CLEARANCES.
9. REFER TO ELECTRICAL SPECIFICATIONS FOR ADDITIONAL REQUIREMENTS.
10. THE ELECTRICAL CONTRACTOR SHALL COMPLY WITH NEC ARTICLE 110.16 FOR LABELING OF PANELS FOR ARC FLASH HAZARD WARNING AS WELL AS FOLLOWING REQUIRED SAFETY PRECAUTIONS WHEN SERVICING OR MAINTAINING ELECTRICAL EQUIPMENT.
11. HVAC CIRCUIT BREAKERS TO BE "HACR" TYPE WHERE REQUIRED BY EQUIPMENT NAMEPLATE PER N.E.C
12. ELECTRICAL CONTRACTOR SHALL BALANCE PANELS AND ELECTRICAL EQUIPMENT TO ±10% BETWEEN PHASES: A/B, B/C, A/C REGARDLESS OF CIRCUITING INDICATED.
13. PROPER CLEARANCE MUST BE MAINTAINED ABOUT ELECTRICAL EQUIPMENT PER N.E.C.. FIELD VERIFY EXACT MOUNTING SPACE AVAILABLE IN ELECTRICAL ROOM / AREA PRIOR TO INSTALLATION OF ELECTRICAL EQUIPMENT.
14. ELECTRICAL CONTRACTOR SHALL MAKE FINAL ELECTRICAL CONNECTIONS FOR A COMPLETE ELECTRICAL DISTRIBUTION SYSTEM.
15. GROUNDING ELECTRODE SYSTEM CONDUCTORS SHALL BE COPPER.
16. CONDUCTORS SHALL BE COPPER, UNLESS NOTED OTHERWISE.
17. FEEDER ROUTING IS DIAGRAMMATIC ONLY. ACTUAL ROUTING OF FEEDERS (OVERHEAD OR UNDERGROUND) IS THE RESPONSIBILITY OF THE ELECTRICAL CONTRACTOR.

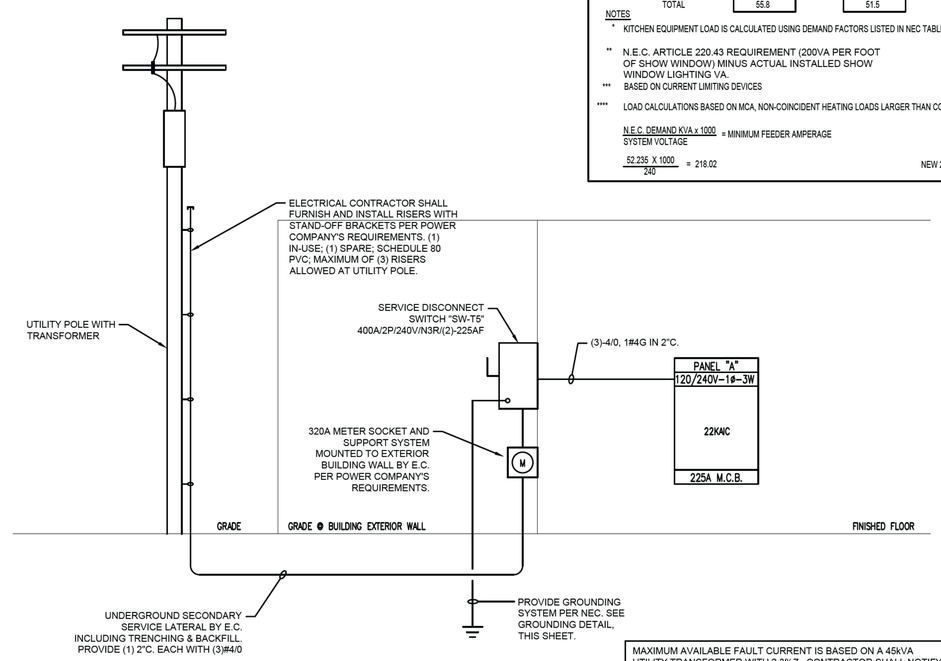

ELECTRICAL ONE-LINE DIAGRAM
N.T.S. 120/240V-1Ø-3W

MAXIMUM AVAILABLE FAULT CURRENT IS BASED ON A 45kVA UTILITY TRANSFORMER WITH 2.3%Z. CONTRACTOR SHALL NOTIFY ENGINEER IMMEDIATELY IF ACTUAL TRANSFORMER CHARACTERISTICS INDICATE A HIGHER FAULT CURRENT IS POSSIBLE.

Watson Consulting Engineers, PLLC
P O BOX 721206
Houston, Texas 77272
(832) 860-5237
ctang@watsonengineers.com
TEXAS FIRM REG#: 17751

ALTAR GROUP
ARCHITECTURE ENGINEERING

SEAL:

STATE OF TEXAS
CHAU THANH N. TANG
83415
LICENSED
PROFESSIONAL ENGINEER
02/20/25

CONSULTANTS:

TAKE 5 OIL CHANGE
PROTOTYPE: 3 BAY
5331 WALZEM ROAD
SAN ANTONIO, TX 78218

REV	DATE	DESCRIPTION
1	11/26/24	ISSUE FOR PERMIT
2	02/21/25	RE-ISSUE FOR PERMIT

DRAWN BY:
CHECKED BY:
ARCH. PROJECT NO.: DB24-023
SHEET NAME: ONE LINE RISER DIAGRAM & PANEL SCHEDULES
SHEET NUMBER: E-201

File Name: P:\Projects\Altar Group\202411-043 Take 5 Oil San Antonio Walzem (24-023)\ARCH\202411-043 XREF TB.DWG
User: MC-Office
Date/Time: Feb 20, 2025 - 10:30am
Xref File(s):

In case of conflicts between drawings, or specs and drawings, Contractors shall request clarifications in writing from Architect/Engineer, otherwise the more stringent requirements shall be provided.

TAKE 5 OIL CHANGE
SAN ANTONIO, TX

GENERAL NOTES AND ELECTRICAL SPECIFICATIONS

CODE INFORMATION
Applicable codes include but are not limited to: City of San Antonio Electrical Code, National Electrical Code (2023 NEC), International Bldg Code 2021, Americans with Disabilities Act.

Occupancy Classification: B

THIS PROJECT SHALL COMPLY WITH THE LOCAL ENERGY CODE, INCLUDING BUT NOT LIMITED TO THE FOLLOWING ENERGY CODE SECTION. ALL EQUIPMENT PROVIDED AND CONTROL PROGRAMMING SHALL COMPLY WITH THE ENERGY CODE REQUIREMENT IN THIS SECTION:
ENERGY CODE PER 2021 IECC CHAPTER 4 – MANDATORY

C405.2 Lighting controls shall be provided per sections C405.2.1 – C405.2.5. Exceptions: Security or emergency areas requiring continuous lighting, interior exit stairways, interior exit ramps and exit passageways, normally off emergency egress lighting.

C405.2.1 Occupancy sensors controls shall be provided in space types: Classrooms/training rooms, Conference/meeting/multipurpose rooms, Copy/print rooms, Lounges/lunch/break rooms, Private offices, Restrooms/storages/janitorial/locker rooms, enclosed spaces ≤ 300 sq. ft.

C405.2.1.1 Sensor control in the above spaces other than warehouses shall: (1) Automatically turn off light within 30 minutes of vacancy, (2) automatically turn on not more than 50% of lighting or be manual on. Exceptions: Full automatic–on controls in public corridors, stairways, restrooms, primary building entrance area and lobbies, areas where manual–on will endanger safety or security of occupants.

C405.2.1.2 In warehouses, occupant sensor shall control lighting in aisle ways and open areas to automatically reduce lighting power by not less than 50% during vacancy. Lighting in each aisle way shall be sensor controlled independently, and shall not control lighting beyond aisle way.

C405.2.2 Time switch controls shall be provided in each area of the building that is not provided with occupant sensor controls. Exceptions: (1) Sleeping units, (2) Patient care spaces, (3) Spaces where automatic shut–off will endanger occupant safety or security, (4) Lighting intended for continuous operation, (5) Shop and laboratory classrooms.

C405.2.2.1 Each space with time–switch control shall also be provided with manual control for lighting reduction per C405.2.2.2. Time–switch device shall have: (1) 7–day clock, (2) 7 different day programmable per week, (3) holiday "shut–off" feature to turn off all controlled lighting loads for at least 24 hours then resume normal scheduled operation, (4) 10 hours backup to prevent loss of program and setting, and (5) a manual override switch for lighting area ≤ 5,000 sq. ft. to remain on for ≤ 2hrs. Exceptions: (1) Malls, arcades, auditorium, single–tenant retail spaces, industrial facilities, and arenas shall be permitted to have: (1.1) time limit ≥ 2 hours with the use of captive key override switch, (1.2) area controlled by override switch can be > 5,000 sq. ft. but ≤ 20,000 sq. ft. (2) Lighting reduction control is not required where manual control is provided in spaces having only one luminaire with rated power less than 100 W, spaces < 0.6 W/sq. ft., and inside corridors, equipment rooms, public lobbies, electrical or mechanical rooms.

C405.2.2.2 Provide a manual control to allow the occupant to reduce the lighting load at least 50% by one of the approved methods (controlling all lamps, dual switching, switching the middle lamp luminaires, or switching each lamp.) Exception: Daylight zones.

C405.2.2.3 Manual controls for lights shall be readily accessible to occupants and located where the controlled lights are visible, or shall identify the area served by the lights and indicate their status.

C405.2.4 Specific Application Controls: Display and accent lights or lighting in cases used for display purposes shall be controlled by dedicated control independent of the controls for other lighting within the room. Hotel/motel sleeping units and guest suites shall have a master control automatically switching off all luminaires and switched receptacles within 20 minutes after occupants leave. Supplemental task lighting, including under–cabinet lighting, shall have control device integral to the luminaires or wall–mounted readily–accessible control device. Lighting for non–visual applications and lighting equipment for sale or demonstrations in lighting education shall be controlled by a dedicated control independent of the controls for other lighting within the room.

C405.2.5 Exterior lighting controls shall (1) automatically turn off exterior lighting based on available daylight, (2) automatically shut–off façade and landscape lighting based on the function of opening/closing time and dawn/dusk period, (3) where not covered in #2 automatically reduce the lighting power at least 30% from midnight to 6 AM, from one hour after closing to one hour before opening, or during period > 15 minutes when there is no activity.

C405.3 Internally illuminated exit signs shall not be more than 5 watts per side.

C405.4 Interior lighting power requirement (Prescriptive) Whenever the interior lighting system submittal is different from that which is specified, Contractor shall provide proof and written documentation that the submitted interior lighting system, including but not limited to lighting fixtures, control devices, and software shall comply with this section of the Energy Code without sacrificing the photometric performance as set by the specified lighting system.

C405.5 Exterior lighting (Mandatory) Whenever the exterior lighting system submittal is different from that which is specified, Contractor shall provide proof and written documentation that the submitted exterior lighting system, including but not limited to the lighting fixtures, control devices, and software shall comply with this section of the Energy Code without sacrificing the photometric performance as set by the specified lighting system.

26 05 00 BASIC ELECTRICAL REQUIREMENTS
Permits and Codes: Obtain and pay for all necessary permits and required inspections. Comply with all national, state and municipal laws, codes and ordinances relating to building and public safety. Provide any required temporary power and utilities for all trades and all construction trailers. Provide temporary construction lighting and power. Electrical Contractor shall include Temporary Electric: All temporary electric shall be in accordance with OSHA Construction standards 29FCR, Part 1926 and Article 590 of the 2020 National Electrical Code. Temporary lighting and power shall be provided in accordance with OSHA standards. The OSHA minimum illumination is 5 footcandles in general construction areas, and 10 FC in mechanical / electrical rooms and workrooms. Included are connections to all construction trailers. The cost of this work is to be included in the base electrical bid for the project.

VISITING THE JOB SITE
Visit the site of the proposed construction in order to fully understand the facilities, difficulties and restrictions attending the execution of the work. No additional compensation will be allowed this Contractor for work or items omitted from his original proposal due to his failure to inform himself regarding such matters affecting the performance of the work in this contract or necessary for the installation and completion of the work included herein.

DRAWINGS
Drawings are diagrammatic; confirm dimensions & locations in the field. If conflicting dimensions are shown, use larger dimensions and verify with Architect. See architectural plans and elevations for exact locations of fixtures and wall mounted devices.

MATERIAL
Comply with NEC Chapter one General, Article 110 Requirements for Electrical Installations and Article 110.2 Approval. All electrical installations materials shall be new, made in USA, approved, listed, labeled, identified, and installed per UL or by a recognized electrical testing laboratory. Material installation shall comply with NEC requirements and perform by craftsmen skilled in this particular work.

EQUIPMENT PROTECTION
Protect equipment and work from damage during handling and installation until completion of construction.

COOPERATION WITH OTHER TRADES
Cooperation with trades of adjacent, related or affected materials or operations, and with trades performing continuations of this work under subsequent contracts, is considered a part of this work in order to effect timely and accurate placing of work and to bring together, in proper and correct sequence, the work of such trades. Provide other trades, as required, all necessary templates, patterns, setting plans and shop details for the proper installation of the work and for the purpose of coordinating adjacent work. Electrical power connections for mechanical and plumbing equipment are in this Division unless noted otherwise. Provide 120V power for HVAC controls, including but not limited to, HVAC control panels, motorized dampers and manual motor switches, control power transformers, and all accessories where 120V power is required. Verify electrical characteristics of all equipment with Division 15 and other special Divisions (elevators etc) before roughing in the electrical connections and energizing the equipment.
Mech/Plumbing/Special Eqpt access and clearance areas: Remove any improperly installed electrical eqpt and conduit that are limiting proper access for eqpt service and maintenance.

ACCESS PANEL
Provide junction boxes, access panels or doors for all devices requiring adjustment. Similarly, for all junction boxes, pull boxes, etc. that are required to be accessible per Code and/or the local authority having jurisdiction. Appearance and locations of access panels/doors must be approved by the Architect prior to installation. Panels/doors shall be designed for the fire rating of wall or ceiling in which they are installed. All access panels shall be lockable and shall be keyed alike (same keying as panels from other divisions). Provide Milcor Architectural Grade Flush Door, Standard Flush Door, Universal Fire Rated Insulated Door, or equal.
Galvanized steel in general applications, stainless steel in restrooms, hospitals, and laboratories. Minimum 16–20 gauge in general application, 10 gauge minimum in vandalism application.

PLENUMS
Plenums are crowded and not all obstacles are indicated. Allow for conduit offsets and pull boxes not indicated on drawings.

Plaster, gypsum board or other non–accessible ceilings:
Contractor shall minimize cutting and patching by installing conduit prior to ceiling/wall/partition cover–up.

LOSS OR DAMAGE TO FACILITIES
The Contractor shall be responsible for loss or damage to the facilities caused by him and his workmen, and shall be responsible for repairing or replacing such loss or damage. The Contractor shall send proper notices, make necessary arrangements, and perform other services required for the care, protection and in–service maintenance of all electrical services for the new facilities. The Contractor shall erect temporary barricades, with necessary safety devices, as required to protect personnel and the general public from injury, removing all such temporary protection upon completion of the work.
The Contractor shall modify, remove and/or replace all materials and items so indicated on the drawings or required by the installation of new facilities. Salvage materials shall remain the property of the Owner and shall be delivered to such destination as directed by the Owner. Dispose of salvage material if not retained by owner.
Where existing construction is removed to provide working and extension access to existing facilities, Contractor shall remove ceiling grids, tiles, doors, piping, air conditioning ductwork and equipment, etc., to provide this access and shall reinstall same upon completion of work in the areas affected.

WORK IN OCCUPIED AREAS
Work in, above, below or near occupied areas shall be at Owner's convenience and may be during evenings or weekends. Schedule all required power outages a minimum of 7 days in advance with Facility Engineer. Do not turn off any power sources. Only Facility Engineer or his authorized representative may do so.

ELECTRICAL SERVICE OUTAGE
Service to the existing building shall be maintained during normal working hours. Any service outage required to complete the work shall be the time and for the length of time as directed by the Owner. All premium time shall be included in Contractor's bid.

FIRE STOPS AND PENETRATION SEALS
For through–penetrations of fire–resistance rated walls by steel, ferrous or copper pipes, tubes, or conduits, fill the annular space with sealants capable of resisting the passage of flame and hot gases in ASTM E119 or UL 263 fire–temperature conditions under a minimum positive pressure differential of 0.01" w.g. for the time period equivalent to the fire resistance rating of the construction penetrated. All penetrations through fire rated floors and walls by non–ferrous, non–copper, or by pipes and conduits other than steel shall be installed using the approved firestop systems per ASTM E814 or UL 1479 with a minimum positive pressure differential of 0.01" w.g., to prevent the spread of smoke, fire, toxic gas or water through the penetration either before, during or after a fire. The fire rating of the firestop system shall be at least that of the floor or wall into which it is installed, so that the original fire rating of the floor or wall is maintained as required by Article 300.21 of the National Electrical Code.

CLEAN UP
A) Provide for isolation of work areas and daily removal of debris. B) Clean all equipment and fixture lenses. C) Replace all burned out lamps. D) Touch up with paint where required.

SUBMITTAL DATA
Submittal are required but not limited to the following equipment:
- Lighting Fixtures
- Switchgear, MCCs, Branch Circuit Panelboards, Switches, etc.
- Conduit/fittings
- Wires
- Lightning Protection System

SHOP DRAWINGS
Shop drawings as required shall be provided by the Electrical Contractor at no additional cost to the Owner/Architect. These shop drawings shall be prepared to indicate installation at major equipment where special coordination problem exist.
Overcurrent & Safety Disconnect Devices for HVAC Eqpt: Overcurrent (OC) & disconnect devices shown on plans are based on a specific HVAC equipment manufacturer. HVAC Contractor may submit other manufacturers, different models or ratings. It is the responsibility of the Electrical Contractor to coordinate OC/Disconnect devices with the HVAC Contractor prior to submitting such devices for Engineer's review. Any deviations from sizes shown on drawings must be noted in the submittals. The Electrical Contractor must certify that he has reviewed and coordinated with the HVAC Contractor and that all OC/Disconnect devices submitted match the HVAC eqpt requirements. Shop drawings without such certification will be returned to the Contractor. Only submittals with such certification will be reviewed.

COMPLETE SYSTEMS
All systems shall be complete and working at completion of construction.

FINAL INSPECTION & OPERATING TESTS
All electrical systems must be checked for proper polarity and sequence, all motors must be checked for proper rotation and all equipment (including HVAC, elevator and special equipment) checked for proper voltage and phasing requirements. Prior to the application of any power, the Contractor must certify that all connected equipment matches the characteristics of the supply circuit voltage, phasing and feeder requirements.
At the time designated by the Architect, the entire system shall be inspected by the Architect and the Engineer. The Contractor or his representative shall be present at this inspection.
After all systems have been completed and put into operation, subject each system to an operating test under design conditions to ensure proper sequence and operation throughout the range of operation. Make adjustments as required to ensure proper functioning of all systems. Special tests on individual systems are specified under individual sections.
The Contractor shall provide a set of as–built drawings o the Owner/Arch. After the inspection, any items which are noted as needing to be changed or corrected in order to comply with these specifications and the drawings shall be accomplished without delay.

O & M INSTRUCTIONS
Submit three copies of O&M instructions for systems and equipment to the Architect / building owner or designated representative. Provide O&M manuals bound in rigid cover, 3–ring binders with spine and cover labels and shall provide operating and maintenance information for every piece of equipment and systems furnished under this Specification.

GUARANTEE
Guarantee all work and materials furnished under this contract for a period of one year from the date of acceptance by the Owner and Architect. Guarantee shall include: All labor, parts, travel/subsistence, etc.

RECORD DRAWINGS
Provide Record Drawings in AutoCAD 2010 or higher and hard copy on reproducible media showing exact dimensions and location for all under–slab conduit, switchgear, panelboards, transformers, equipment, and revised homerun circuit locations. Record drawings shall include all changes and deviations in the work from the Construction Documents. Electronic CAD backgrounds may be available from the Architect or Engineers.

26 05 73 SHORT CIRCUIT CALCULATION, PROTECTIVE DEVICE COORDINATION AND ARC FLASH STUDIES
Provide short circuit calculation, protective device coordination and arc flash hazard studies. Where emergency system(s) are provided, studies shall include two levels of coordination: selective coordination for all currents and time and coordination for the period of time that a fault's duration extends beyond 0.1 second. Studies shall encompass electrical distribution system from normal power source or sources to and including branch breakers in each panelboard. Prepare study to verify required equipment AIC ratings prior to ordering distribution equipment. All overcurrent protective devices shall be selected based on the results of the studies. Equipment short circuit current ratings (AIC) shown on drawings are for reference only, provide equipment with the correct AIC rating based on the results of the studies. Submit report with equipment submittals for engineer's review. Perform study with aid of computer software programs. Report shall include: (a) Calculation methods and assumptions, (b) one line diagram, (c) state conclusions and recommendations.
Studies and report shall be prepared by a professional engineer licensed in the state of Louisiana.
Contractor shall provide warning labels on electrical equipment indicating incident energy level, level of hazard and the required personal protection equipment. Equipment required to be labelled shall include, but not limited to, motor control centers, panels, contactors, disconnect switches and motor starters.
Contractor shall provide Siemens Dynamic Arc Flash Sentry (DAS) System and ETU776 trip unit in WL circuit breakers where arc flash studies reveal dangerous or category 3 levels. Contractor shall provide remote keyed switch for control, located per the engineer, and provide blue beacon light visible from all areas of the equipment room, to indicate 'maintenance mode' is active. Equivalent system by GE, Eaton and Square D are acceptable.

26 05 33 CONDUIT AND BOXES
Conduit: Shall be rigid galvanized steel (RGS), or electrical metallic tubing (EMT) as manufactured by Allied, Triangle or Wheatland.
Indoors above grade: EMT or RGS.
Outdoors above grade, stub–ups, on roof, or where (indoor and outdoor) subject to physical damage: RGS, IMC.
Below grade: Schedule 40 or 80 PVC or RGS. Provide transition fittings from PVC Sch 40 or 80 to RGS for all above grade conduit. All underground metallic conduit shall have 40–mil thick external PVC coating for corrosion protection. Underground conduit minimum size 3/4". Minimum 24" burial depth from finished grade to top of conduit, provide deeper burial depth if required by local codes. Provide concrete encasement for all incoming service conduit unless specifically noted otherwise. Provide red detectable warning tape over entire run of service and major conduit runs.
Under slab: RGS, Schedule 80 PVC.
Install ground wires where shown on the drawings. Compression or set–screw type fittings may be used for EMT. Minimum conduit size 1/2 inch, however homerun to panel shall be minimum 3/4 inch.
Type "MC" metal clad cable is acceptable only if approved by the Owner in writing and the Local Authority.
MC cable, if approved, however, may be used only for drops from ceiling plenum junction boxes to receptacles and light switches in walls. MC cable may also be used as fixture whips from ceiling plenum junction boxes to light fixtures, whips must be 6–ft or less. Homerun circuits to panels shall be in conduit, MC homerun to panels are not acceptable.
Type "AC" armored cable (commonly referred to as "BX") is not acceptable and shall not be used.
Electrical nonmetallic tubing (ENT, NEC Article 362) shall not be used unless specifically approved by the Engineer. Flexible conduit shall be utilized as final connections (3'–5' only) at the following equipment: motors, lighting fixtures, heater, power supplies, and any other vibration producing equipment. Utilize 1/2" flexible metallic conduit minimum and include a green ground wire. Use sealtite in wet locations such as outdoor condensing units, rooftop HVAC eqpt, etc. Conduit shall be supported from structure every 5 feet and within 3 feet of all boxes. Use locknuts inside and out at boxes. Maintain minimum 12" separation from all high temperature pipes. All conduit runs shall be installed either parallel or perpendicular to building lines. Route conduit as directly as possible with largest radius bends possible. Make bends with standard ells or bends per NEC. Provide expansions fittings if conduit crosses structural expansion joint. All conduit on roof shall be supported by an engineered, prefabricated portable pipe system specifically designed to be installed above finished roof without roof penetrations, flashings or damage to roof membrane. Provide pipe hanger systems manufactured by PHP (phone 713–672–5088, 800–797–6585), NO EXCEPTIONS.
Provide SS8–C for conduit up to 2 1/2", for conduit 3 1/2" and smaller provide PP10 with strut, for conduit 4" and larger provide PSE–Custom or PPH–D. Support at interval not to exceed 10' on center, and within 5' of any deflection of conduit. Provide pull box where conduit run exceeds more than the equivalent of three quarter bends (270 degrees total). Clean conduit interior after installation; coat scratches with zinc paint. Provide pull wire in all conduit (power, fire alarm, telephone and other communication conduit). Pull wire also required in all spare conduit.
Project Record Documents: Accurately record actual routing of all underslab and underground conduits; include dimensions from key building points and depth of cover.

BOXES
Outlet Boxes: Shall be galvanized steel suitable for location. Ceiling outlet boxes shall be 4" octagon. Wall outlet boxes shall be proper design to accommodate the devices required – 4 inch square with raised cover. Provide Raco, Steel City or Appleton. ALL J–BOXES / SPLICE BOXES MUST BE ACCESSIBLE.

Provide ceiling access panels/doors in hard ceilings (gypsum board, wooden ceiling, etc..) for all J–boxes above hard ceilings. Ceiling access panels/doors locations and types must be approved by the Architect and must maintain the ceiling assembly rating or UL listing.

Junction /Pull Boxes: (a) Provide access panel for all boxes installed in inaccessible places such as behind hard ceilings, (b) for each conduit run: provide one junction/pull box for each equivalent three–quarter bends (270°). (c) underground feeders: minimum one pull box for each 350 feet of conduit run.

26 05 19 BUILDING WIRE AND CABLE
Wire: (Triangle, American Insulated Cable Co., or Cablec)
All wiring shall be in conduit (except plenum rated low voltage cables). All wires must be 75°C rated or better, 60°C rated wire shall not be used. 90°C rated wire may be used but only at 75°C ampacity.

A.) Minimum size #12 except controls may be #14. Use #10 conductors for 20 ampere, 120 volt branch circuits longer than 100 feet. Use #10 conductors for 20 ampere, 277 volt branch circuits longer than 200 feet.
B.) Type THHN/THWN stranded copper thermoplastic in dry locations.
C.) Type THWN–2 in wet locations (outdoor, underground, on roof, ...).
D.) All wire shall be 98% conductivity copper, 600 volt. Aluminum wires may be used only for feeders 100 amps and larger.
E.) Wire #10 and smaller may be solid or stranded, #8 or larger shall be stranded.
F.) Communication wires (Fire Alarm, Telephone, HVAC thermostat, data etc.): Plenum rated low–smoke cable may be used in lieu of wire/conduit type installation. All plenum rated cable shall be properly supported by bridal rings, cable ties, clips etc made by Erico (caddy communication fasteners) or equal. Do not use scrap wire to wrap and support communication wires. Homemade support devices are not acceptable. Do not lay communication cable directly on top of ceiling tiles, install cables a minimum of 12" above ceiling tiles and 12" from HVAC ductwork. Provide a minimum 6" separation between power conduit and communication wirings.

FIELD INSULATION TESTING
Insulation resistance of all conductors shall be tested. Each conductor shall have its insulation resistance tested after the installation is completed and all splices, taps and connections are made except connection to or into its source and point (or points) of termination. Insulation resistance of conductors which are to operate at 600 volts or less shall be tested by using a Biddle megger of not less than 1000 volts DC. Insulation resistance of conductors rated at 600 volts shall be free of shorts and grounds and have a minimum resistance phase–to–phase and phase–to–ground of at least 10 megohms. Conductors that do not exceed insulation resistance values listed above shall be removed at Contractor's expense and replaced and test repeated. The Contractor shall furnish all instruments and personnel required for tests, shall tabulate readings observed, and shall forward copies of the test readings to the Owner. These test reports shall identify each conductor tested, date and time of test and weather conditions. Each test shall be signed by the party making the test.

26 27 26 WIRING DEVICES
Wiring Devices: Furnish and install where indicated on drawings. All devices shall be Leviton "Decora" type (white color, confirm w/Architect) or approved equal unless specified otherwise by Architect. All receptacles shall be "Spec Grade" type. All power outlets shall have circuit numbers and panel name engraved on faceplate.
Dimmer switches: Provide dedicated neutral for dimmer controlled lighting circuit. Do not share neutral with 2 or more branch circuits. Do not break fins (heat sinks) on dimmer switch. Derated dimmer switches may be used only where specifically approved by Engineer.
Ground fault circuit interrupter (GFCI) receptacle shall comply with the latest edition of UL 943 safety standard. GFCI receptacle shall have integral end–of–life LED indicator light, and continuous sensing and self–testing every 60 seconds. The receptacle shall shut itself off if the ground fault features cease to function properly. Provide Hubbell GFR5352 or approved equal. Provide GFCI receptacles in all areas required by NEC article 210.8.
Tamper resistant receptacles – provide in all areas required by NEC article 406.12.
Cover plates: high abuse nylon or stainless steel per architect. Provide circuit number label on all device plates.

All electrical boxes on opposite sides of corridor wall and firewalls having maximum 2–hour fire resistance rating shall not exceed 16 square inches in area, and must be separated by a horizontal distance of not less than 24 inches, 2012 IBC 714.3.2. Where 24" separation of boxes on opposite sides of wall is not possible, protect boxes by a listed putty pad, or use listed electrical boxes that have been tested for use in the fire–resistance rated assemblies and horizontal distance specified in the listing of the electrical boxes.

Testing and Certification: Contractor shall deliver a written report certifying that every receptacle has been tested as follows and found acceptable: (a) the physical integrity of each receptacle shall be confirmed by visual inspection. (b) The continuity of the grounding circuit in each electrical receptacle shall be verified. (c) Correct polarity of the hot and neutral connections in each electrical receptacle shall be confirmed. (d) The retention force of the grounding blade of each electrical receptacle (except locking–type receptacle) shall be not less than 115 grams (4oz.).

26 05 26 GROUNDING AND BONDING
Grounding: All conduit work and electrical equipment shall be effectively and permanently grounded in accordance with NEC requirements. Provide green equipment grounding conductor with all power and receptacle and lighting circuits. Green equipment grounding conductor shall be routed from panel ground bus to final devices.
Grounding electrodes: Provide 3/4" x 10–ft long, copper–clad, driven–type, steel grounding rod. For below–grade connections provide exothermic welded type; for above grade connections provide mechanical bolted–type connections utilizing high conductive copper alloy or bronze lugs or clamps. Service ground resistance: Must be less than 25 ohms. Where a single electrode does not have a resistance to ground of 25 ohms or less in homogeneous soil, provide additional ground rods as required to obtain 25 ohms or less. Multiple ground rods shall be at least 6 feet apart and shall be bonded together to form the grounding electrode system.

26 05 53 ELECTRICAL IDENTIFICATION
Identification: Label all junction and pull boxes with panels and circuit numbers. Furnish markers or paint band for each conduit longer than 6 feet, spacing 20 feet on center. Color of paint band: (a) 208 volt system – black w/blue stripes, (b) fire alarm system –red, (c) telephone system – yellow, (d) other system – by specific letter description. Label all homerun and major conduit with home panels/switches, etc. at every 10–ft. interval if accessible and/or visible, example: Panel "X", Sw. "X", Cond Unit XXX, Xfmr Disc. Sw., etc. Mark all branch conduit with circuit numbers at each surface mounted panel location. For recessed panels, mark branch conduit in ceiling plenum just above panels.
Color Code: Conductors shall be color coded as follows:

	120/240V 1PH, 3W
Phase A	Black
Phase B	---
Phase C	Red
Neutral	White
Ground	Green

All panels shall be identified using nameplates with 4 rows of text (letter height shall be 1/4" minimum), example:
PANEL "XX" 225 AMPS MCB
120/240V, 1 PHASE, 3 WIRE
FEEDER SIZE 4 # 4/0 THWN, 1 # 4 G, 2 1/2" C.

(CONTINUED ON SHEET E–302)

Watson Consulting Engineers, PLLC
P O BOX 721206
Houston, Texas 77272
(832) 860-5237
ctang@watsonengineers.com
TEXAS FIRM REG#: 17751

ALTAR GROUP
ARCHITECTURE ENGINEERING
SEAL
STATE OF TEXAS
CHAU THANH N. TANG
83415
LICENSED PROFESSIONAL ENGINEER
02/20/25
CONSULTANTS

TAKE 5 OIL CHANGE
PROTOTYPE: 3 BAY
5331 WALZEM ROAD
SAN ANTONIO, TX 78218

REV	DATE	DESCRIPTION
1	11/26/24	ISSUE FOR PERMIT
2	02/21/25	RE–ISSUE FOR PERMIT

DRAWN BY:
CHECKED BY:
ARCH. PROJECT NO.: DB24–023
SHEET NAME: ELECTRICAL SPECS
SHEET NUMBER: E-301

(CONTINUED FROM SHEET E-301)

Panel nameplates shall be engraved three-layer laminated plastic, white letters on black background for normal power. Secure nameplates to equipment using screws or rivets.

All switches, starters, combination starter/disconnect, transformers, wireways, communication cabinets, junction and pull boxes etc. shall be similarly identified.
Provide label for each branch circuit on Distribution Panels, Switchboards and MCC's. Example:
ACCU-1
240V, 1 PHASE, 3 WIRE
FEEDER SIZE 3 # 4/0 THWN, 1 # 4 G, 2 1/2" C.

33 71 73 ELECTRICAL SERVICE
Contractor shall make arrangements for temporary and permanent service. Comply with all service installation standards of the serving utility. Electrical service characteristics shall be as shown on the electrical one line diagram. Contractor shall coordinate location of service entrance with the Power Company. Provide materials and equipment required to connect the project service to the utility system. Contractor shall submit to the Power Company an application for service. Contractor shall submit service application to the Power Company within 30 days after award of project contract. Contractor shall secure a Service Outlet and Data Statement ("statement") from the Power Company. Verify that the information on the statement is correct, including voltage, phase and number of wires, type of service, service facility arrangements, and location of service outlet. Provide a copy of the statement for Engineer's review. Failure to submit service application in a timely manner may cause project delay and additional cost. All such cost due to Contractor's failure to apply and coordinate for service in a timely manner shall be borne by the Contractor. Contractor shall coordinate and assist Owner if application is required to be submitted by Owner.

26 24 16 PANELBOARDS – BRANCH CIRCUIT
All panelboards shall have copper buses. Load center type panelboards are not acceptable and shall not be used. Provide breakers which are quick-make and quick-break on both manual and automatic operation. Use a trip-free breaker which is trip indicating. Incorporate inverse time characteristic by bimetallic overload elements and instantaneous characteristic by magnetic trip. GFCI breaker shall comply with the latest edition of UL 943 standards, which include self-test and lockout functions. For 2-pole and 3-pole breakers, use the common-trip type so that an overload or fault on one pole will trip all poles simultaneously. Handle ties are not acceptable. All breakers shall be bolt-on thermal magnetic type. Stab-on breakers are not acceptable. Do not use tandem circuit breakers. All circuit breakers rated 100 amp or less shall be suitable for terminating 75°C wire (breakers rated for only 60°C wire are not acceptable. See 26 05 19 – Building Wire and Cable). Service entrance panelboard shall comply UL 67 and NEC2017 480.3(A)(2) barriers safety requirement.
All equipment shall be labeled, panelboards shall be labeled both on the coverplates and the interiors.

Panelboard Directories: Provide a steel directory frame mounted inside the door with a heat-resistant transparent face and a directory card for identifying the loads served. Identify each circuit with load and locations (room names and room numbers) and indicate with typed directories. (Example: 5 duplex receptacles, Office, RM XXX).
Install the panelboards such that the center of the switch or circuit breaker in the highest position will not be more than 6 1/2 feet above the floor or working platform.
For each panel: furnish and install one spare 3/4" conduit for every 6 spares and/or spaces in the panel. Each spare conduit shall be installed with pull string stubbed to a J-box located in accessible ceiling/plenum space. Install a minimum of one spare 3/4" conduit for every panel shown on plans, even if there are no spares/spaces in some panels. Acceptable manufacturers are GE/ABB, Square D, Eaton, and Siemens.

26 28 19 ENCLOSED SAFETY SWITCHES
All safety switches shall be heavy-duty type with quick-make, quick-break contacts and suitable for terminating 75°C wire. Provide each switch with a ground lug. Provide a defeatable, front accessible, coin-proof door interlock to prevent opening the door when the switch is in the ON position and to prevent turning the switch ON when the door is open. Provide incoming line terminals with an insulated shield so that no live parts are exposed when the door is open. Provide each switch with an isolated, fully rated neutral block with provisions for bonding the block to the enclosure. Where fusible switches are shown, provide switches with rejection-type fuse holders which are suitable for use with fuses. In general, mount switches so that operating handle is approximately 44 inches above finished floor; where grouped, align tops of switches. Acceptable manufacturers are GE, Square D, Eaton, and Siemens.

27 05 33 COMMUNICATION SYSTEMS
Telephone, Data, Monitoring Systems: Unless otherwise noted on the drawings, provide and install wall outlet boxes, cover plates and 3/4" conduit and pull string stubbed to a J-box above accessible ceiling for installation of wiring by others. Coordinate with communication system or low voltage contractor for proper installations. Unless otherwise instructed by low voltage contractor, CAT5e and RG-6 cables shall be kept at least 12 inches away from electrical wiring when parallel, and at 90° when crossing electrical wires. Maintain at least 12" separation between electrical boxes and data/communication boxes.

FIRE ALARM SYSTEM
Electrical Contractor shall provide new fire alarm devices (smoke detectors, pull stations, speakers/strobes, etc.) as required by code. Provide power supplies, re-programming, circuit re-assignments, new wires and/or conduit/wire extension and all accessories as required for a complete and operating system. Verify zoning requirements with Owner and provide accordingly. All penetrations through fire rated floors and walls shall be protected in accordance with spec section "Fire Stops and Penetration Seals" above.

Similar for all other communication systems shown on plan, including, Security System etc.

GENERAL NOTES: (APPLY TO ALL ELECTRICAL SHEETS)
G1. All circuit numbers shown are for reference only. Field verify actual circuit numbers required and adjust accordingly.
Provide type-written director(ies) reflecting actual circuit numbers used, with field revised/relocated circuits clearly indicated. Director(ies) shall include date and project description, example: 2024 NEW OIL CHANGE FACILITY.

G2. Each circuit is shown with an individual homerun. E.C. may elect to combine two or more circuits in one common conduit and with common neutral where allowed (circuits with high content of harmonic currents may not use common neutral, example: circuits with non-linear electronic power supplies such as computers, copiers, printers, etc.).
Note: Ampacities of conductors shall be reduced if more than three current carrying conductors are installed in a raceway. See N.E.C. Article 310.15(B)(2)(a) "Adjustment Factors". Conductors shall be derated if 4 or more wires are installed in one conduit (see related note "G3" on temperature limitation of conductor ampacity).

G3. Temperature limitations on ampacity of conductor:
The ampacity of a conductor shall be selected based on the National Electrical Code Articles 310.15 and 110.14.(C)(1),(2). The temperature limitations noted in 110.14.(C)(1),(2) may be paraphrased as follows:

(A) Circuits rated 100 amp or less:
Use 60°C rated conductors only. 75°C and 90°C conductor may be used but only at 60°C ampacity.
Exceptions: higher temperature cable are allowed provided the equipment is listed and identified for use with the higher rated conductors.
(B) Circuits rated more than 100 amp or conductor larger than #1 AWG.
Use 75°C rated conductors only. 90°C conductor may be used but only at 75°C ampacity.
Exceptions: higher temperature cable are allowed provided the equipment is listed and identified for use with the higher rated conductors

G4. Wires oversized to alleviate voltage drop: Where oversized wires are used to alleviate voltage drop, Contractor to provide reducer lugs and/or J-boxes as required to terminate wires in equipment.

G5. All conduit and wire must be concealed from view. Exposed conduit and wire are not acceptable, exceptions are Central Plant, Mechanical/Electrical Rooms. The use of power pole(s) that take up floor space to route circuits below ceiling is not allowed, unless indicated on the drawings or specifically approved by the Architect.

Existing Construction: All new wirings installed in existing wall/ceiling/millwork shall be concealed, including concrete block wall. Patch any cut areas to match existing condition.

G6. All electrical and communication devices (light switches, receptacles, telephone, data etc.) shall be recessed mounted unless noted otherwise. Field verify receptacle mounting requirements with Owner/Arch., mount all duplex receptacles with the "u" ground terminal on top, unless noted otherwise or as required by Owner/Arch. Obtain ground orientation requirement in writing from Architect. Neutral terminal shall be on top for horizontally mounted receptacles.

G7. All outlets on dedicated circuits shall be properly identified by using distinctive color devices (use brown or gray devices. Confirm color requirements with Architect/Owner.). Cover plates shall be marked with circuit number(s) and loads served. Example: Ckt # LA-1 Copy Machine.

G8. Equipment layout is based on Square D and/or Siemens. Equipment by other manufacturers such as GE may have larger dimensions. It is the responsibility of the electrical contractor to provide equipment with similar dimensions that would fit in the space noted.

G9. Verify location of all outlets (power & communication) with Owner/Arch prior to rough-in. Owner reserves the right to move any outlets 5 feet in any direction prior to rough-in. All receptacles within 6 feet of any wet area (example: sink, dishwasher, etc...) shall have ground fault circuit protection, whether specifically indicated on drawings or not.

Mounting height of all outlets (receptacles, switches, telephone, data, etc.) in areas with countertop shall be verified with Arch/Owner. Generally all outlets are to be mounted above countertop except outlets for disposers, undercounter dishwasher, undercounter refrigerators, etc. Refer to Arch interior elevations.

All weatherproof/wet location and/or outdoor receptacles shall have listed, "extra duty" weatherproof enclosures with weatherproof "in-use" covers (NEC Article 406.8(B)). Provide Raco, Bell, Raytite II covers or equal.

G10. Switches/starters for mech and other equipment: Location of disconnect switches, starters, control stations, etc. are shown diagrammatically on the drawings. E.C. shall install such devices in compliance with Code required clearance requirements. All such devices shall be accessible after equipment are in place and satisfy code clearance requirements. Remove and re-install devices that are inaccessible or with inadequate code clearance. Coordinate installation w/HVAC.

G11. HVAC Equipment: Overcurrent devices, disconnect switches, conduit/wire are selected based on equipment shown on Mechanical drawings. Field verify ratings of eqpt supplied by HVAC, revise electrical as required to match actual eqpt supplied by Mech Contractor.

Outdoor Pad-Mounted A/C Equipment: Connect A/C equipment to outdoor NEMA 3R disconnect switches with underground rigid conduit feeder, stub up conduit near equipment connection point. Provide sealtite from conduit stub-up to equipment, maximum length of sealtite 5 feet. Sealtite longer than 5 feet is not allowed.

G12. Estimated Loads: Information and data on specialty equipment may not be available during the design process. Some loads are necessarily estimated. Such estimated loads may be indicated as (EST.) on plans, riser diagrams and/or panel schedules. Contractor shall bid the project using the estimated feeder/breaker/switches shown on drawings. However, the Contractor is responsible for confirmation and verification of all such estimated loads with the appropriate vendors/suppliers. All shop drawings submitted by the Contractor shall include certification that the Contractor has confirmed/verified any estimated loads shown on the drawings. Contractor will not be due any additional compensation for his failure to verify the estimated loads shown on drawings. Provide credit to the Owner if actual loads are smaller than estimated loads, credit shall be given for size reduction of feeder/breaker/switches.

Example of equipment loads that are typically estimated: special copy machine, welding eqpt outlet, elevator machinery ...

G13. Exhaust Fans: Where exhaust fans are indicated as interlocked with HVAC equipment, E.C. shall provide all required relays, conduit/control wires, etc. as required for a complete and operating system. Coordinate interlock requirements with HVAC contractor.

G14. Provide housekeeping concrete pads (minimum 4" high) for all indoor/outdoor floor or ground mounted electrical equipment including switches, transformers, switchboards, M.C.C., transfer switches etc. Provide all required and necessary galvanized unistrut support for all indoor/outdoor electrical equipment.

G15. Fire Wall: Do not install receptacles, telephone, data outlets, etc. back-to-back in fire/smoke partitions or within the same space enclosed by two adjacent studs. Also apply to all corridor walls.

G16. Wiring through-penetrations of wall and ceiling assemblies: Comply with the following (a), (b), and (c) parts or combination thereof where applied. (a) Rated walls: All penetrations by low voltage and line voltage (120V and higher) wirings in steel or ferrous conduits shall be filled with sealant capable of resisting the passage of flame and hot gases in ASTM E119 or UL 263 fire-temperature conditions under a minimum positive pressure differential of 0.01" w.g. for the time period equivalent to the fire resistance rating of the construction penetrated. Provide firestop systems installed per ASTM E814 or UL 1479 with a minimum positive pressure differential of 0.01" w.g. and an F rating not less than the wall/ceiling assembly fire resistive rating for all low voltage and line voltage (120V and higher) wirings not in ferrous or steel conduits. Sleeves thru rated walls does not qualify as firestop systems. Multiple wires and cables may share a common firestop system provided proper separation is maintained between communication cables and electrical wiring per Spec Section 27 05 33. (b) Non-rated walls: All wiring shall be in rigid conduits or provide sleeves through walls for all low voltage and line voltage (120V and higher) wirings as required for routing wirings from all outlet locations back to control panels/terminal boards, panels, junction boxes, etc. Coordinate requirements with communication systems contractor(s). (c) The annular space around through-penetrations of exterior walls and roofs shall be sealed airtight with weather proof sealant.

Note: For all low voltage outlet devices including telephone, data, etc., the Electrical Contractor shall "Provide outlet back box with cover plates and 3/4" conduit stubbed to accessible ceiling". In addition, E.C. shall provide all required and necessary sleeves through all rated walls/floors from accessible ceiling back to control panels/terminal boards, panels, junction boxes, etc.

G17. Relocation and/or replacement of existing devices: Relocation and/or replacement work shall include but not limited to relocation/replacement of all associated conduit/wire and control. Provide new and/or additional mounting hardware, back boxes, etc. as required. Provide additional conduit/wire as required. Wire may not be spliced in inaccessible fittings/junction boxes. Re-pull new wires as required to make splices accessible.

Communication/Data wires may not be spliced, pull new wires for all relocated communication/data devices. Where existing devices are removed and replaced with new, provide re-connection for all existing circuits. Provide conduit/wire extension as required for re-connection to new devices.

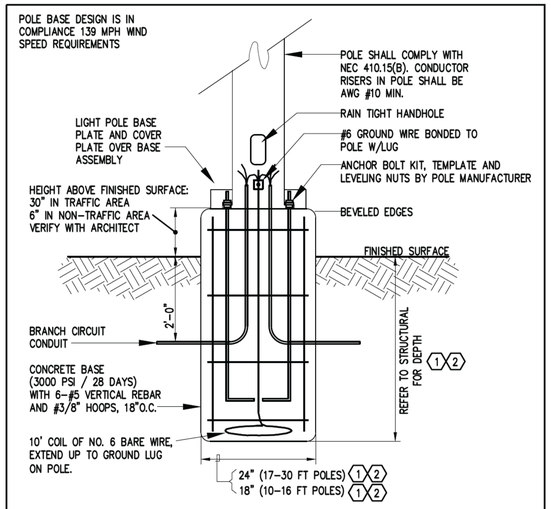

1 **POLE BASE DETAIL**
NOT TO SCALE

KEYED NOTES #

1. POLE BASE DIAMETERS AND VERTICAL DEPTHS INTO EARTH SHALL COMPLY WITH POLE MANUFACTURER'S ENGINEERED CALCULATIONS & THE STRUCTURAL ENGINEER CALCULATIONS WHICH TAKE INTO ACCOUNT THE ACTUAL POLE DIAMETER AND THE GEOTECHNICAL CONDITIONS.

2. THIS POLE BASE DETAIL ONLY SETS THE MINIMUM POLE BASE STANDARDS. CONTRACTOR SHALL REFER TO STRUCTURAL FOR THE SITE SPECIFIC POLE BASE DESIGN. POLE BASE DEPTH SHALL BE PER STRUCTURAL DESIGN OR 10 FEET, WHICHEVER IS DEEPER.

Watson Consulting Engineers, PLLC
P O BOX 721206
Houston, Texas 77272
(832) 860-5237
ctang@watsonengineers.com
TEXAS FIRM REG#: 17751

ALTAR GROUP
ARCHITECTURE ENGINEERING

SEAL:
STATE OF TEXAS
CHAU THANH N. TANG
83415
LICENSED
PROFESSIONAL ENGINEER
02/20/25

CONSULTANT:

TAKE 5 OIL CHANGE
PROTOTYPE: 3 BAY
5331 WALZEM ROAD
SAN ANTONIO, TX 78218

REV	DATE	DESCRIPTION
1	11/26/24	ISSUE FOR PERMIT
2	02/21/25	RE-ISSUE FOR PERMIT

DRAWN BY:
CHECKED BY:
ARCH. PROJECT NO.: DB24-023
SHEET NAME: ELECTRICAL SPECS
SHEET NUMBER: E-302

File Name: P:\Projects\Altar Group\202411-043 Take 5 Oil San Antonio Walzem (24-023)\ARCH202411-043 XREF TB.DWG
User: MC-Office
Date/Time: Feb 20, 2025 - 10:30am Xref File(s):

ELECTRICAL ABBREVIATIONS

A	AMPS
AC	AIR CONDITIONING UNIT
AFC	ABOVE FINISH COUNTER
AFF	ABOVE FINISH FLOOR
AFG	ABOVE FINISH GRADE
AHU	AIR HANDLING UNIT
AIC	ASYMMETRICAL INTERRUPTING CURRENT
ARCH.	ARCHITECTURAL
A.T.	AMP TRIP
ATS	AUTOMATIC TRANSFER SWITCH
AWG	AMERICAN WIRE GAGE
BKR	BREAKER
BLDG.	BUILDING
C	CONDUIT
CATV	CABLE TELEVISION
CCTV	CLOSED CIRCUIT TELEVISION
CH	CHILLER
CONTR	CONTRACTOR
CT	COOLING TOWER
CU	COPPER
CUH	CABINET UNIT HEATER
DE	DUAL ELEMENT
DN	DOWN
DS	DISCONNECT SWITCH
DWG.	DRAWING
(E) or EXIST.	EXISTING
EBB	ELECTRIC BASEBOARD
E.C.	ELECTRICAL CONTRACTOR
EF	EXHAUST FAN
EH	ELECTRIC HEATER
ELEC.	ELECTRICAL
EM	EMERGENCY
EMT	ELECTRICAL METALLIC TUBING
EOR	ENGINEER OF RECORD
EQ.	EQUAL
ETR	EXISTING TO REMAIN
EUH	ELECTRIC UNIT HEATER
EWC	ELECTRIC WATER COOLER
EWH	ELECTRIC WATER HEATER
F	FUSE
FA	FIRE ALARM
FACP	FIRE ALARM CONTROL PANEL
FC	FAN COIL UNIT
FLUOR	FLUORESCENT
FPB	FAN POWER BOX (VAV)
F.P.C.	FIRE PROTECTION CONTRACTOR
FS	FLOW SWITCH
FT.	FOOT/FEET
G.C.	GENERAL CONTRACTOR
GFI	GROUND FAULT INTERRUPTING PROTECTION
GND	GROUND
HID	HIGH INTENSITY DISCHARGE
HOA	HAND-OFF-AUTOMATIC
HP	HORSEPOWER
HPS	HIGH PRESSURE SODIUM
HVAC	HEATING, VENTILATION, AIR CONDITIONING
IG	ISOLATED GROUND
INCAND.	INCANDESCENT
JB	JUNCTION BOX
KCMIL	ONE THOUSAND CIRCULAR MILS
K.E.C.	KITCHEN EQUIPMENT CONTRACTOR
KVA	KILOVOLT AMPERE
KW	KILOWATT
LTG	LIGHTING
MATV	MASTER ANTENNA TV
MAU	MAKE-UP AIR UNIT
MAX	MAXIMUM
MCB	MAIN CIRCUIT BREAKER
MCC	MOTOR CONTROL CENTER
M.C.	MECHANICAL CONTRACTOR
MECH.	MECHANICAL
MFR	MANUFACTURER
MH	METAL HALIDE
MIN	MINIMUM
MLO	MAIN LUGS ONLY
MOD	MOTOR OPERATED DAMPER
MSB	MAIN SWITCHBOARD
MTD	MOUNTED
NEC	NATIONAL ELECTRIC CODE
NF	NON FUSED
NFPA	NATIONAL FIRE PROTECTION ASSOCIATION
NIC	NOT IN CONTRACT
NL	NIGHTLIGHT
NTS	NOT TO SCALE
Ø or PH	PHASE
P	POLE
PB	PULL BOX
P.C.	PLUMBING CONTRACTOR
PNL	PANEL
PRE	POWER ROOF EXHAUSTER
PVC	POLYVINYL CHLORIDE
RTU	ROOF TOP UNIT
SPKR	SPEAKER
SPST	SINGLE POLE SINGLE THROW
TIE	MULTIPLE OUTLETS WIRED ON SAME BRANCH CICRUIT
TR	TAMPER RESISTANT
TS	TAMPER SWITCH
TTB	TELEPHONE TERMINAL BOARD
TV	TELEVISION
TYP.	TYPICAL
UH	GAS FIRED UNIT HEATER
UL	UNDERWRITER'S LABORATORY
UNO	UNLESS NOTED OTHERWISE
UV	UNIT VENTILATOR
V	VOLTS
W	WATTS
WP	WEATHER-PROOF TYPE DEVICE (NEMA 3R RATED)
WR	WEATHER-RESISTANT TYPE DEVICE (NEMA 3R RATED)
XFMR	TRANSFORMER

GENERAL NOTES

1. FINAL CONNECTIONS TO LIGHT FIXTURES SHALL BE MADE WITH GREENFIELD FLEXIBLE CONDUIT. MAXIMUM LENGTH OF FLEXIBLE CONDUIT SHALL BE 6'-0".
2. REFER TO ARCHITECTURAL REFLECTED CEILING PLANS FOR EXACT LOCATION OF LIGHT FIXTURES. CONTRACTORS TO COORDINATE LOCATIONS OF LIGHTING, SPEAKERS, AIR DIFFUSERS, GRILLES, SPRINKLER HEADS & THE LIKE, WITH REFLECTED CEILING LAY-OUTS AS REQUIRED & DIRECTED BY THE ARCHITECT.
3. ALL DEVICES, EQUIPMENT, FIXTURES, & THE LIKE, MUST BE GROUNDED BY USE OF A PROPERLY SIZED GROUNDING CONDUCTOR. MECHANICAL/ ELECTRICAL BONDS OF THE METALLIC RACEWAY SYSTEM SHALL ALSO BE MAINTAINED.
4. REFER TO MECHANICAL, PLUMBING, AND FIRE PROTECTION PLANS FOR EXACT LOCATION OF MECHANICAL AND PLUMBING EQUIPMENT. COORDINATE LOCATION OF DISCONNECT SWITCH ASSOCIATED WITH EACH PIECE OF EQUIPMENT WITH RESPECTIVE CONTRACTOR AND INSTALL IN ACCORDANCE WITH THE NEC.
5. REFER TO DIVISION 15 (21, 22 & 23) SPECIFICATIONS, HVAC, PLUMBING AND FIRE PROTECTION PLANS FOR ADDITIONAL ELECTRICAL WORK REQUIREMENTS & COORDINATION.
6. ALL RECEPTACLES SHOWN BACK-TO-BACK IN WALLS SHALL BE SEPARATED HORIZONTALLY BY 8" MINIMUM.
7. WHERE OPEN WIRING METHODS FOR LOW VOLTAGE SYSTEMS ARE PERMITTED BY THE CONTRACT DOCUMENTS AND LOCAL AUTHORITY, THE CONDUCTOR INSULATION MUST BE PLENUM RATED.
8. BRANCH CIRCUIT CONDUCTOR SIZES (& CONDUITS) SHALL BE INCREASED FROM THOSE INDICATED ON THE PLANS TO PREVENT EXCESSIVE VOLTAGE DROP. BRANCH CIRCUITS SHALL BE INSTALLED WITH WIRES OF SUFFICIENT SIZE SO THAT VOLTAGE DROP BETWEEN THE PANEL & THE LOADS DO NOT EXCEED A LIMIT OF 3%.
9. REGARDLESS OF THE TEMPERATURE RATING OF THE CONDUCTOR INSULATION, ALL CONDUCTOR AMPACITY RATINGS FOR THIS PROJECT SHALL BE DETERMINED FROM THE 75°C CONDUCTOR TEMPERATURE RATINGS INDICATED IN THE NEC TABLES. WHERE EQUIPMENT OR DEVICES ARE PROVIDED WITH TERMINALS/LUGS RATED FOR 60°C, THE AMPACITY RATING OF THE 75°C CONDUCTOR SHALL BE LIMITED TO ITS ASSOCIATED 60°C RATING AS INDICATED IN THE NEC TABLES. THE ELECTRICAL CONTRACTOR SHALL BE RESPONSIBLE TO INCREASE THE CONDUCTORS AND CONDUIT SIZE AS REQUIRED.
10. ALL 120V AND 277V BRANCH CIRCUITS SHALL BE PROVIDED WITH SEPARATE NEUTRAL CONDUCTORS. SHARED NEUTRALS WILL NOT BE PERMITTED FOR MULTI-CIRCUIT INSTALLATIONS. WHERE MULTIPLE CIRCUITS ARE RUN IN A COMMON RACEWAY, THE AMPACITY OF THE CONDUCTORS SHALL BE PROPERLY DERATED & CONDUIT SHALL BE SIZED PER CODE. UNDER NO CIRCUMSTANCES SHALL MORE THAN SIX (6) CURRENT CARRYING CONDUCTORS BE RUN IN A SINGLE CONDUIT. REFERENCE NEC ARTICLE AND TABLE 310.15(B)(3)(a).
11. ALL CONDUITS SHALL CONTAIN A GROUND CONDUCTOR SIZED PER NEC TABLE #250.122. IN ADDITION, WHERE AN ISOLATED, INSULATED GROUND IS REQUIRED, A SEPARATE GROUND CONDUCTOR WITH GREEN INSULATION SHALL BE RUN FROM THE PANEL GROUND BUS TO THE ISOLATED GROUND CONNECTION OF THE DEVICE. IN NO CASE SHALL THE SYSTEM GROUND (CONDUCTOR & ASSOCIATED OUTLET BOXES, CONDUIT & BUILDING STEEL) BE ALLOWED TO CONTACT THE ISOLATED GROUND (CONDUCTOR & DEVICE). WHERE CIRCUIT CONDUCTORS ARE INCREASED IN SIZE FOR ANY REASON (I.E. VOLTAGE DROP, DERATING, ETC.), THE GROUND CONDUCTOR SIZE SHALL BE INCREASED PROPORTIONATELY (ACCORDING TO CIRCULAR MIL AREA) FROM THE SIZE REQUIRED BY NEC TABLE #250.122.
12. ELECTRICAL INSTALLATION REQUIREMENTS FOR ALL HVAC, PLUMBING, FIRE PROTECTION, SPECIAL SYSTEMS AND OWNER EQUIPMENT BEING FURNISHED BY OTHERS SHALL BE REVIEWED AND COORDINATED WITH OTHER TRADES PRIOR TO ROUGH-IN. OBTAIN EQUIPMENT SHOP DRAWINGS FROM INSTALLER/SUPPLIER/CONTRACTOR/OWNER FURNISHING EQUIPMENT, AS REQUIRED, FOR REVIEW AND COORDINATION. CONTACT ARCHITECT/ENGINEER WITH ANY DISCREPANCIES FOUND BETWEEN CONSTRUCTION DRAWINGS AND EQUIPMENT BEING FURNISHED PRIOR TO ROUGH-IN.
13. THE ELECTRICAL CONTRACTOR SHALL FURNISH ALL ACCESS PANELS, AS REQUIRED FOR SERVICING AND TESTING, FOR EQUIPMENT AND/OR DEVICES FURNISHED UNDER HIS CONTRACT. THE GENERAL CONTRACTOR SHALL INSTALL ACCESS PANELS. THE ELECTRICAL CONTRACTOR SHALL COORDINATE THE SIZE AND LOCATION OF EACH ACCESS PANEL WITH THE ARCHITECT AND GENERAL CONTRACTOR PRIOR TO ROUGH-IN.
14. ELECTRICAL CONTRACTOR SHALL INCLUDE IN HIS BID ALL CUTTING, TRENCHING AND PATCHING ASSOCIATED WITH THE ELECTRICAL INSTALLATION.
15. ALL PENETRATIONS THROUGH FIRE RATED WALLS ASSOCIATED WITH THE ELECTRICAL INSTALLATION SHALL BE SLEEVED AND FIRE-STOPPED USING A UL APPROVED METHOD. UL APPROVED METHOD SHALL MEET OR EXCEED FIRE RATING OF STRUCTURE BEING PENETRATED. REFERENCE ARCHITECTURAL PLANS FOR FIRE RATED STRUCTURES.
16. NO CONDUIT, BOXES, WIRING, OR CABLES SHALL BE INSTALLED WITHIN 1 1/2" OF THE LOWEST POINT OF THE UNDERSIDE OF THE ROOF DECKING, NOR SHALL THEY BE INSTALLED CONCEALED WITHIN METAL-CORRUGATED ROOF DECKING. FOR EXISTING INSTALLATIONS, THE ELECTRICAL CONTRACTOR SHALL BE RESPONSIBLE TO REPLACE AND/OR REWORK EXISTING CONDUIT, BOXES, WIRING, AND CABLING THAT IS NOT IN COMPLIANCE WITH THIS REQUIREMENT.
17. ALL ELECTRICAL EQUIPMENT AND DEVICES FOR THIS PROJECT MUST BE UL LISTED. DEVICES, EQUIPMENT, SYSTEMS SHALL BE INSTALLED PER N.E.C. REQUIREMENTS AND MANUFACTURER'S INSTRUCTIONS.
18. ALL CONDUIT AND CABLING SHALL BE PROPERLY SUPPORTED AS REQUIRED BY THE NATIONAL ELECTRICAL CODE. FOR EXISTING INSTALLATIONS, THE ELECTRICAL CONTRACTOR SHALL BE RESPONSIBLE TO REPLACE AND/OR REWORK EXISTING CONDUIT AND/OR CABLING THAT IS NOT IN COMPLIANCE WITH THIS REQUIREMENT.
19. CONTRACTOR SHALL FIELD VERIFY SLAB ON GRADE FLOOR CONSTRUCTION TYPE PRIOR TO CUTTING. UNDER NO CIRCUMSTANCES SHALL THE CONTRACTOR CUT A STRUCTURAL FLOOR SLAB THICKER THAN FOUR (4") INCHES WITHOUT PRIOR WRITTEN APPROVAL FROM ENGINEER OF RECORD. NOTIFY ENGINEER OF RECORD OF ANY SLAB THICKNESS GREATER THAN FOUR (4") INCHES PRIOR TO PROCEEDING WITH ANY SAW CUTTING.

ELECTRICAL SYMBOL LEGEND

SYMBOL	DESCRIPTION
	CONDUIT WITH WIRING RUN CONCEALED IN OR ABOVE CEILING OR WALL, OR RUN EXPOSED IN UNFINISHED AREAS. CROSS HATCHING INDICATES NUMBER OF CONDUCTORS (#12 AWG - MINIMUM). PROVIDE A CODE-SIZED GROUND WIRE IN ALL CONDUITS IN ADDITION TO THE CONDUCTORS SHOWN. SHADED DOT INDICATES CODE-SIZED ISOLATED GROUND WIRE IN CONDUIT.
	CONDUIT WITH WIRING RUN CONCEALED BELOW FLOOR. CROSS HATCHING INDICATES NUMBER OF CONDUCTORS (#12 AWG - MINIMUM). PROVIDE A CODE-SIZED GROUND WIRE IN ALL CONDUITS IN ADDITION TO THE CONDUCTORS SHOWN. SHADED DOT INDICATES CODE-SIZED ISOLATED GROUND WIRE IN CONDUIT.
	PANELBOARD SURFACE MOUNTED 6'-6" TO TOP. SEE SPECIFICATIONS, PANEL SCHEDULES AND ONE-LINE DIAGRAM FOR ADDITIONAL INFORMATION.
	20A - 125V GROUNDING TYPE DUPLEX RECEPTACLE MOUNTED 48" AFF TO TOP OF BOX, UNLESS NOTED OTHERWISE
	20A - 125V ISOLATED GROUND TYPE DUPLEX RECEPTACLE MOUNTED 48" AFF TO TOP OF BOX, UNLESS NOTED OTHERWISE
	20A - 125V GROUNDING TYPE QUADRAPLEX RECEPTACLE MOUNTED 48" AFF TO TOP OF BOX, UNLESS NOTED OTHERWISE
GFI	20A - 125V GROUND FAULT INTERRUPTING TYPE DUPLEX RECEPTACLE MOUNTED 48" AFF TO TOP OF BOX, UNLESS NOTED OTHERWISE
GFI WP	20A - 125V GROUND FAULT INTERRUPTING TYPE DUPLEX RECEPTACLE, WEATHER RESISTANT LISTED WITH DIE-CAST ALUMINUM "WHILE IN-USE COVER" AND MOUNTED 48" AFF TO TOP OF BOX, UNLESS NOTED OTHERWISE
	SPECIAL PURPOSE RECEPTACLE - RATING AND NEMA CONFIGURATION AS REQUIRED FOR EQUIPMENT BEING PROVIDED. MOUNT 48" AFF, UNLESS OTHERWISE NOTED.
J	JUNCTION BOX - TYPE AND SIZE AS REQUIRED BY NEC
M	MANUAL MOTOR STARTER TOGGLE SWITCH WITH THERMAL OVERLOAD PROTECTION - TYPE AND RATING PER EQUIPMENT BEING SERVED. PROVIDE ENCLOSURE WITH LOCK-OUT ACCESSORY. THERMAL OVERLOADS SIZED PER EQUIPMENT NAMEPLATE RATING.
	DISCONNECT SWITCH - TYPE AND RATING AS INDICATED ON PLANS
	MOTOR - TYPE AND RATING AS INDICATED ON PLANS
	BACKBOX FOR TELEPHONE AND DATA DEVICE(S) MOUNTED 18" AFF TO TOP OF BOX, UNLESS NOTED OTHERWISE, PROVIDE 1"C WITH PULLWIRE FROM JUNCTION BOX WITH SINGLE GANG PLASTER RING TO ACCESSIBLE CEILING SPACE. FURNISH AND INSTALL CONDUIT BUSHINGS.
	BACKBOX FOR TELEPHONE DEVICE MOUNTED 54" AFF TO TOP OF BOX, UNLESS NOTED OTHERWISE. PROVIDE 1"C WITH PULLWIRE FROM JUNCTION BOX WITH SINGLE GANG PLASTER RING TO ACCESSIBLE CEILING SPACE. FURNISH AND INSTALL CONDUIT BUSHINGS.
	BACKBOX FOR DATA DEVICE(S) MOUNTED 18" AFF TO TOP OF BOX, UNLESS NOTED OTHERWISE, PROVIDE 1"C WITH PULLWIRE FROM JUNCTION BOX WITH SINGLE GANG PLASTER RING TO ACCESSIBLE CEILING SPACE. FURNISH AND INSTALL CONDUIT BUSHINGS.
x	20A - 120V/277V SINGLE POLE TOGGLE SWITCH MOUNTED 48" AFF TO TOP OF BOX, UNLESS NOTED OTHERWISE. IF APPLICABLE, LOWER CASE SUBSCRIPT "x" - KEYS SWITCH TO FIXTURES BEING CONTROLLED (TYPICAL OF ALL SWITCH SYMBOLS)
OC	LINE VOLTAGE PASSIVE INFRARED WALL SWITCH OCCUPANCY SENSOR MOUNTED 48"AFF TO TOP OF BOX, UNLESS NOTED OTHERWISE (OC2 = DUAL RELAY). MANUFACTURER SHALL BE WATTSTOPPER, HUBBELL, SENSOR SWITCH, COOPER CONTROLS, OR LUTRON.

ELECTRICAL SYMBOL LEGEND NOTES:

1. NOT ALL SYMBOLS SHOWN IN THIS LEGEND MAY APPEAR ON THE DRAWINGS.
2. WHERE CEILINGS DO NOT EXIST TO STUB CONDUITS ABOVE FOR LOW VOLTAGE, CONDUITS SHALL BE STUBBED UP TO BOTTOM OF / ABOVE STRUCTURE ABOVE. IN FINISHED AREAS, PROVIDE COMPLETE CONDUIT PATHWAYS, INCLUDING PULL-BOXES, UNLESS OTHERWISE DIRECTED. CONDUIT, JUNCTION BOXES AND THE LIKE SHALL BE PAINTED TO MATCH AREA FINISHES. ALL CONDUIT SHALL BE ROUTED IN STRAIGHT RUNS WITH 90 DEGREE BENDS.
3. WHERE HARD INACCESSIBLE CEILINGS EXIST, PROVIDE COMPLETE CONTINUOUS CONDUIT PATHWAYS, INCLUDING PULL-BOXES, AND ACCESS PANELS, FOR LOW VOLTAGE UNLESS OTHERWISE DIRECTED. PROVIDE CONDUIT SLEEVES TRAVERSING OVER INACCESSIBLE CEILINGS BETWEEN AREAS WITH ACCESSIBLE CEILINGS, AS REQUIRED. VERIFY JUNCTION BOXES ABOVE INACCESSIBLE CEILINGS ARE WITHIN REACH OF THE ACCESS PANEL AND CAN BE ACCESSIBLE PER N.E.C. AND LOCAL CODE.

VIBRATION AND SEISMIC CONTROL NOTES

1. REFERENCE VIBRATION AND SEISMIC CONTROL SPECIFICATION SECTION FOR PROJECT REQUIREMENTS.
2. ELECTRICAL EQUIPMENT AND SUPPORT SYSTEMS BEING INSTALLED SHALL BE RATED TO COMPLY WITH PROJECT VIBRATION AND SEISMIC CONTROL REQUIREMENTS.

LIGHTING FIXTURE SCHEDULE

TYPE	LOAD (VA)	VOLTAGE (V)	LAMPS NO.	LAMPS TYPE	MANUFACTURER	CATALOG NUMBER	DESCRIPTION
A	80.2	120	1	LED 4000K	COLUMBIA	MPS8-40ML-CW-EDU-CSHC-MPSWG4	CHAIN-HUNG 96" HEAVY-DUTY INDUSTRIAL LED FIXTURES. NOTE: COORDINATE EXACT LOCATION AND MOUNTING HEIGHT WITH EQUIPMENT, DUCTWORK, PIPING, ETC. PRIOR TO ROUGH-IN.
AE	80.2	120	1	LED 4000K	COLUMBIA	MPS8-40ML-CW-EDU-CSHC--MPSWG4-ELL14	SAME AS FIXTURE TYPE 'A' EXCEPT WITH 90-MINUTE BATTERY BACKUP.
B	42	120	1	LED	COLUMBIA	LCL4-40ML-EDU	4FT LED LENSED STRIPLIGHT WITH FROSTED PRISMATIC ACRYLIC LENS, SURFACE MOUNTING, AND 0-10V DIMMING DRIVER.
BE	42	120	1	LED	COLUMBIA	LCL4-40ML-EDU-ELL14	SAME AS FIXTURE TYPE 'B' EXCEPT WITH 90-MINUTE BATTERY BACKUP.
C	30	120	2	13W CFL	KICHLER	9246AZ W/9536AZ LENS	UP/DOWN LIGHTING WALL SCONCE. UL LISTED FOR WET LOCATION. PROVIDE WITH 1 #9536AZ LENS EACH FIXTURE.
D	30	120	2	LED	LITHONIA	9246AZ W/9536AZ LENS	UP/DOWN LIGHTING WALL SCONCE. UL LISTED FOR WET LOCATION. PROVIDE WITH 1 #9536AZ LENS EACH FIXTURE.
E	50	120	1	50W MH	LITHONIA	WSQ-50M-MD-120-2DC12-LPI-DDBT	EXTERIOR WALL PACK WITH EMERGENCY 12V CIRCUIT AND (2) 35W EMERGENCY LAMPS. PROVIDE REMOTE 90M BATTERY PACK INSTALLED INSIDE. COLOR BY ARCHITECT.
F	40	120/277	1	LED	LITHONIA	WSQLED-P3-40K-S2-MVOLT-BBW-DDBTXD	EXTERIOR LED WALL PACK. COORDINATE MOUNTING HEIGHT WITH ARCHITECTURAL PLANS.
EX	-	120/277	-	LED (WITH UNIT)	LITHONIA	LQM-S-W-3-R-120/277-ELN	THERMOPLASTIC LED EXIT SIGN WITH UNIVERSAL MOUNTING, RED LETTERS ON A WHITE STENCIL FACE, CHEVRON KNOCKOUTS AND NICKEL CADMIUM BATTERY. NOTE: MOUNTING, NUMBER OF FACES, AND CHEVRONS AS INDICATED ON PLANS. VERIFY PRIOR TO ORDERING.
EMX	-	120/277	-	LED (WITH UNIT)	LITHONIA	LHQM-S-W-3-R-120/277-ELN	THERMOPLASTIC COMBINATION EMERGENCY LIGHT/LED EXIT SIGN WITH UNIVERSAL MOUNTING, RED LETTERS ON A WHITE STENCIL FACE, CHEVRON KNOCKOUTS AND NICKEL CADMIUM BATTERY. NOTE: MOUNTING, NUMBER OF FACES, AND CHEVRONS AS INDICATED ON PLANS. VERIFY PRIOR TO ORDERING.
EM	20	120/277	2	10W MR16 (WITH UNIT)	LITHONIA	6ELM2P H1206	SURFACE MOUNTED EMERGENCY LIGHTING UNIT WITH TWO ROUND WHITE THERMOPLASTIC ADJUSTABLE LAMP HEADS, WHITE THERMOPLASTIC HOUSING AND LEAD CALCIUM BATTERY. NOTE: WALL OR CEILING MOUNT AS SHOWN ON PLANS. AIM HEADS AS REQUIRED FOR PROPER ILLUMINATION ALONG PATH OF EGRESS. ADJUST AS REQUIRED PER AHJ.
EM2	12	120	-	LED (WITH UNIT)	LITHONIA	AFF-OEL-DDBTXD-UVOLT-LTP-SDRT-WT-CW	ARCHITECTURAL SURFACE MOUNTED EXTERIOR EMERGENCY LIGHT. WALL-MOUNTED AT 96" AFF. CONNECT TO UNSWITCHED LEG OF EXTERIOR LIGHTING CIRCUIT. PROVIDED WITH COLD WEATHER BATTERY PROVIDING 90 MINUTE ILLUMINATION.
SA1	200	120	1	LED (WITH UNIT)	NLS LIGHTING	NV-2-T4-96L-7-40K7-UNV-ASA-FINISH-PER	SINGLE-HEAD LED POLE LIGHT FIXTURE, WET LOCATION RATED, MOUNT FIXTURE ON NLS LIGHTING SSSP-25-4S-7G-12BC-MOUNT-FINISH-136 25FT STEEL POLE.

LIGHTING FIXTURE SCHEDULE NOTES:

1. REFER TO ARCHITECTURAL REFLECTED CEILING PLAN AND/OR ROOM FINISH SCHEDULE TO DETERMINE PROPER TYPE OF LIGHT FIXTURE REQUIRED FOR THE CEILING CONSTRUCTION PRIOR TO ORDERING THE FIXTURES & PROVIDE FIXTURES THAT ARE COMPATIBLE WITH THE CEILING SYSTEM.
2. ALL BALLASTS FOR LINEAR AND COMPACT FLUORESCENT LAMPS SHALL BE UNIVERSAL VOLTAGE (120/277V), ELECTRONIC PROGRAMMED RAPID START WITH LESS THAN 10% THD, U.N.O. ALL SUCH BALLASTS FOR EXTERIOR FIXTURES SHALL BE COLD WEATHER BALLASTS RATED FOR 0°F OR LOWER. SEE ELECTRICAL SPECIFICATIONS FOR ADDITIONAL REQUIREMENTS.
3. ALL LIGHTING FIXTURES UTILIZING DOUBLE ENDED FLUORESCENT LAMPS SHALL BE PROVIDED WITH AN INTEGRAL DISCONNECTING MEANS INSTALLED BY THE FIXTURE MANUFACTURER. FOR SAID FIXTURES WHERE AN INTEGRAL DISCONNECTING MEANS IS NOT AVAILABLE BY THE MANUFACTURER, THE E.C. SHALL FURNISH AND INSTALL A LOCAL EXTERNAL DISCONNECTING MEANS AS REQUIRED PER NEC 410.
4. CATALOG NUMBERS AND MANUFACTURERS ARE TO INDICATE TYPE AND QUALITY OF FIXTURE DESIRED. SUBMIT CUTSHEETS OF THESE AND ALTERNATE MANUFACTURERS FOR ARCHITECT AND OWNER APPROVAL PRIOR TO PURCHASE OF ANY FIXTURES. INFORMATION ON ALTERNATE FIXTURES PROPOSED BY THE CONTRACTOR SHALL INCLUDE THE ADD/DEDUCT ASSOCIATED WITH ACCEPTANCE OF THAT FIXTURE (OR THE ALTERNATE PACKAGE AS A WHOLE).
5. MASTER SLAVE WIRING CONFIGURATIONS SHALL BE USED FOR MULTI-LAMP FLUORESCENT FIXTURES WHERE POSSIBLE. THE CONTRACTOR SHALL VERIFY THE QUANTITY AND TYPE OF BALLASTS REQUIRED TO PERMIT BI-LEVEL SWITCHING WHERE INDICATED. WHERE BI-LEVEL LIGHTING IS INDICATED INBOARD AND OUTBOARD LAMPS SHALL BE SWITCHED SEPARATELY.

Watson Consulting Engineers, PLLC
P O BOX 721206
Houston, Texas 77272
(832) 860-5237
ctang@watsonengineers.com
TEXAS FIRM REG#: 17751

ALTAR GROUP

ARCHITECTURE ENGINEERING

SEAL:

STATE OF TEXAS
CHAU THANH N. TANG
83415
LICENSED
PROFESSIONAL ENGINEER
02/20/25

CONSULTANTS:

TAKE 5 OIL CHANGE
PROTOTYPE: 3 BAY
5331 WALZEM ROAD
SAN ANTONIO, TX 78218

REV	DATE	DESCRIPTION
1	11/26/24	ISSUE FOR PERMIT
2	02/21/25	RE-ISSUE FOR PERMIT

DRAWN BY:

CHECKED BY:

ARCH. PROJECT NO.: DB24-023

SHEET NAME: ELECTRICAL DETAILS

SHEET NUMBER: E-401

File Name: P:\Projects\Altar Group\202411-043 Take 5 Oil San Antonio Walzem (24-023)\ARCH\202411-043 XREF TB.DWG
User: MC-Office
Date/Time: Feb 20, 2025 - 10:30am Xref File(s):

ALTAR GROUP

December 3, 2024

Take 5 Windcrest, TX- Narrative

City of Windcrest, Tx:

Take 5 / Driven Brands and Altar Group would like to request a review of our attached SUP and site plan submittal of a new Take 5 Oil Change facility located at 5331 Walzem Road SanAntonio, TX 78218. The proposed use of the new building would be a auto sales and service facility. The site is 0.34 acres, and the proposed facility is to be 1,682 square feet. in the B1 (Neighborhood Business District). The property is currently a restaurant use with an existing stucco building and the site is relatively flat topography. The site is in Zone X, so there are no flood concerns.

Altar Group and Take 5 respectfully request consideration and recommendations of the attached special use permit submittal. Sincerely,

John D. Linton, AIA

Altar Group
Cypress, Texas 77429
[redacted]

WINDCREST
TEXAS

Universal Development Application

(Please use separate application for each submittal)

- ☐ Land Use Amendment
- ☐ Thoroughfare Amendment
- ☐ Zoning Change (choose one)
  - ☐ Straight Zoning
  - ☐ PUD (Planned Unit Development)
- ☐ Variance
- ☐ Land Study
- ☐ Final Plat
- ☐ Preliminary Plat
- ☑ Specific Use Permit
- ☐ Conditional Use Permit
- ☐ Exception
- ☐ Replat
- ☐ Amending Plat
- ☐ Minor Plat
- ☐ Vacating Plat
- ☐ Site Plan
- ☐ Tree Removal Permit

Project Name: TAKE 5 OIL CHANGE
Total Acres: 0.34 AC Survey Name: ALTA/NSPS LAND TITLE SURVEY Abstract No.: 348104
Project Location (address): 5331 WALZEM RD SAN ANTONIO, TX 78218

Current Zoning: B1 **Current Use:** VACANT **# of Lots/Units:** LOT 1 **For Commercial/Industrial:**
Proposed Zoning: B1 **Proposed Use:** AUTO TUNE-UP SHOP **Please Circle One:** SF MF COMM (IND) OTHER **Total Proposed Sq. Ft.** 1,682 SF

Applicant Information:

Property Owner Name: EMERGE PIZZA OF SAN ANTONIO / KAMEL SINGH
Address: 10355 CENTREPARK DR STE 100 City: HOUSTON St/Zip: TX 77043
Phone: [redacted] Fax: E-Mail: [redacted]

Applicant (if different than Owner): ALTAR GROUP, PLLC
Address: 10109 LOUETTA RD SUITE 103 City: Houston St/Zip: 77070
Phone: [redacted] Fax: E-Mail: [redacted]

Representative:
Address: City: St/Zip:
Phone: Fax: E-Mail:

Authorization: By signing this application, you hereby grant Staff access to your property to perform work related to your application. Also, you waive the statutory time limits in accordance with Section 211, 212 and 245 of the Texas Local Government Code.

Owner's Signature

Kamal Singh
Typed/Printed Name

Known to me to be the person whose name is subscribed to the above and foregoing instrument, and acknowledged to me that they executed the same for the purposes and consideration expressed and in the capacity herein stated. Given under my hand and seal on this 27 day of December, 20 24.

Notary Public

JARED BENTLY
NOTARY PUBLIC
ID 13385057-2
STATE OF TEXAS
EXP. 07/11/2026
(Notary Seal)

City of Windcrest Use Only

Project No.:
Total Fees:
Payment Method:
Submittal Date:
Accepted by:

WINDCREST, TEXAS

Monthly Finance Report
March 2025

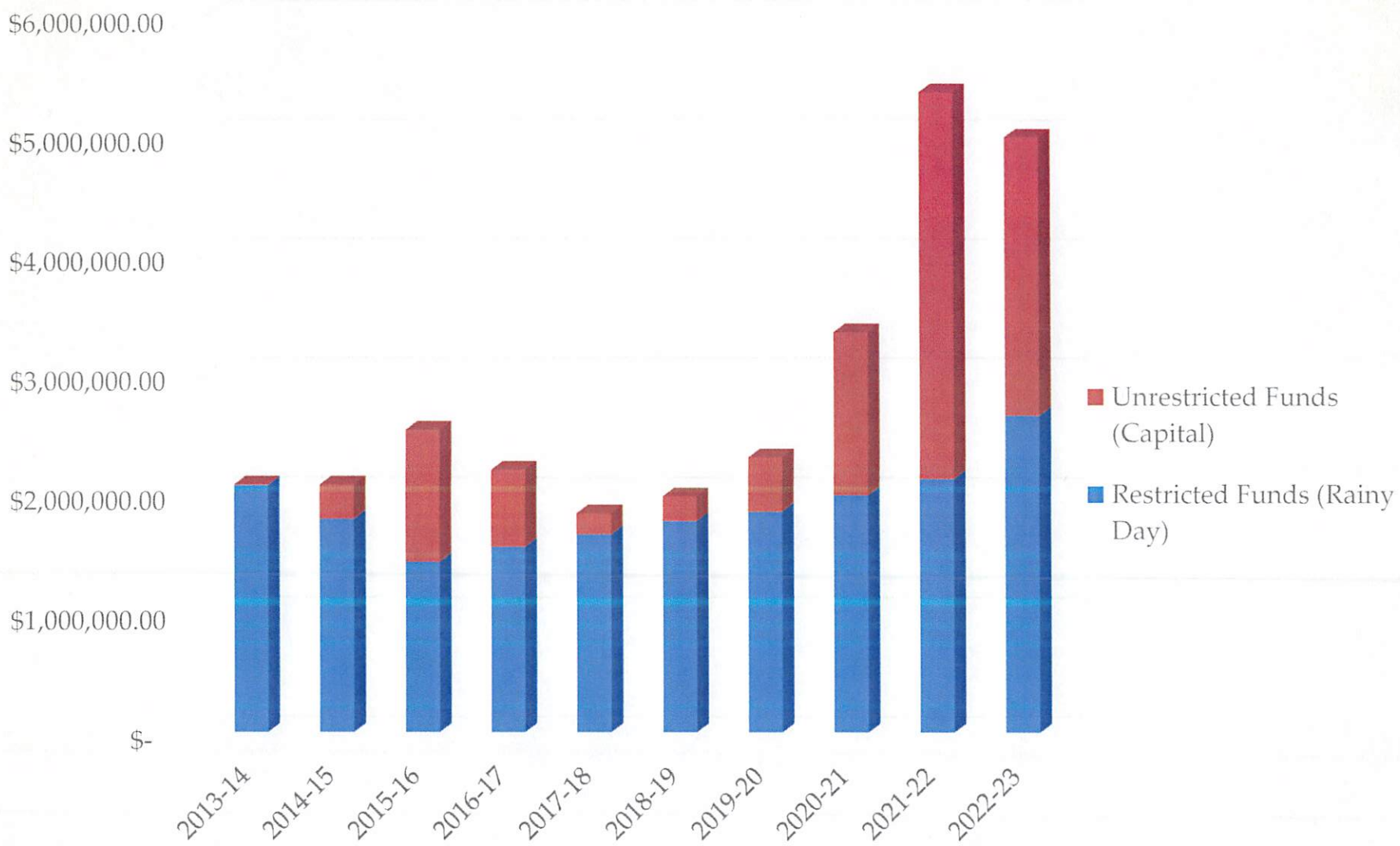

Fund Balance

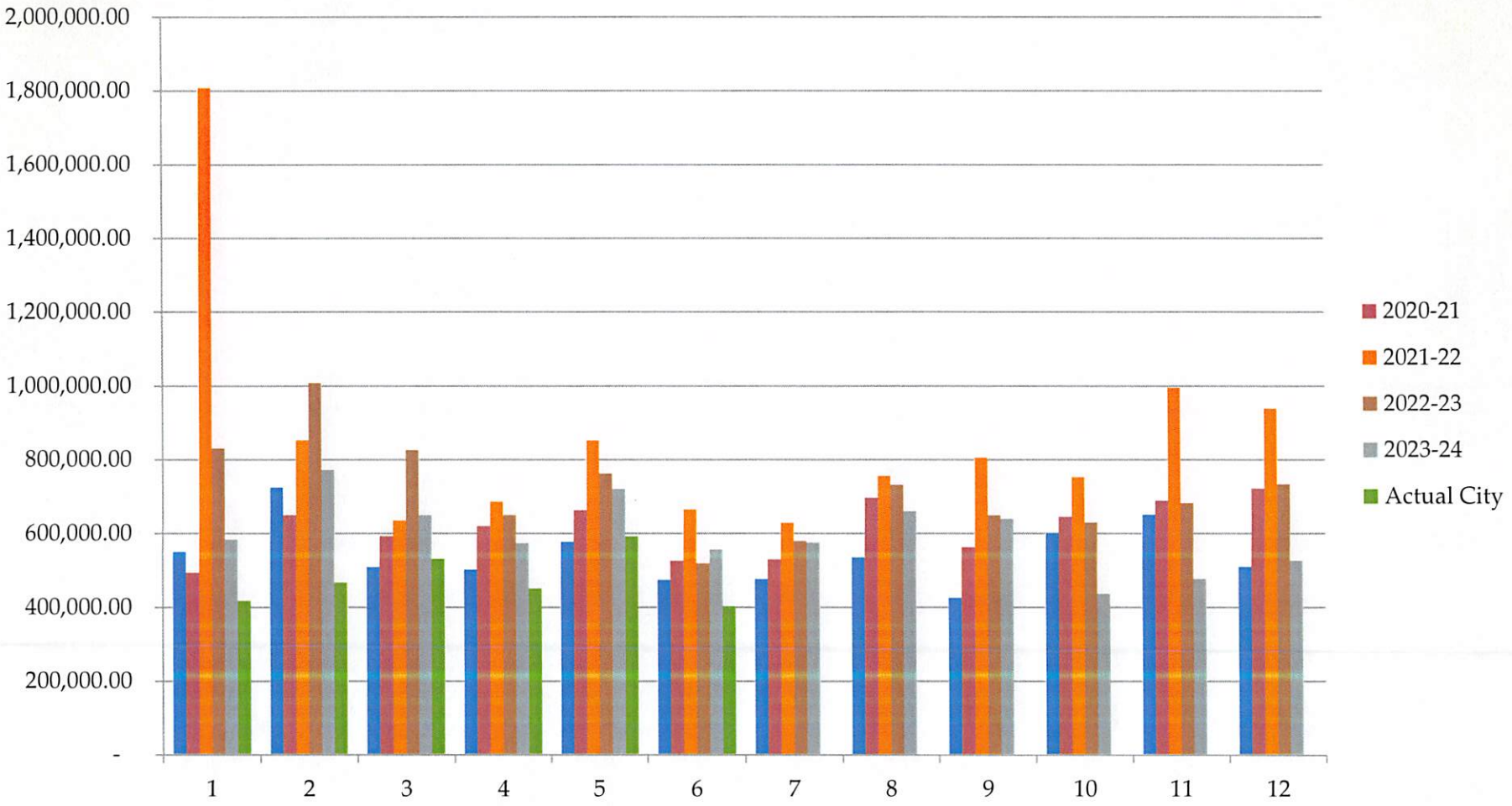

City of Windcrest
Total Sales Tax

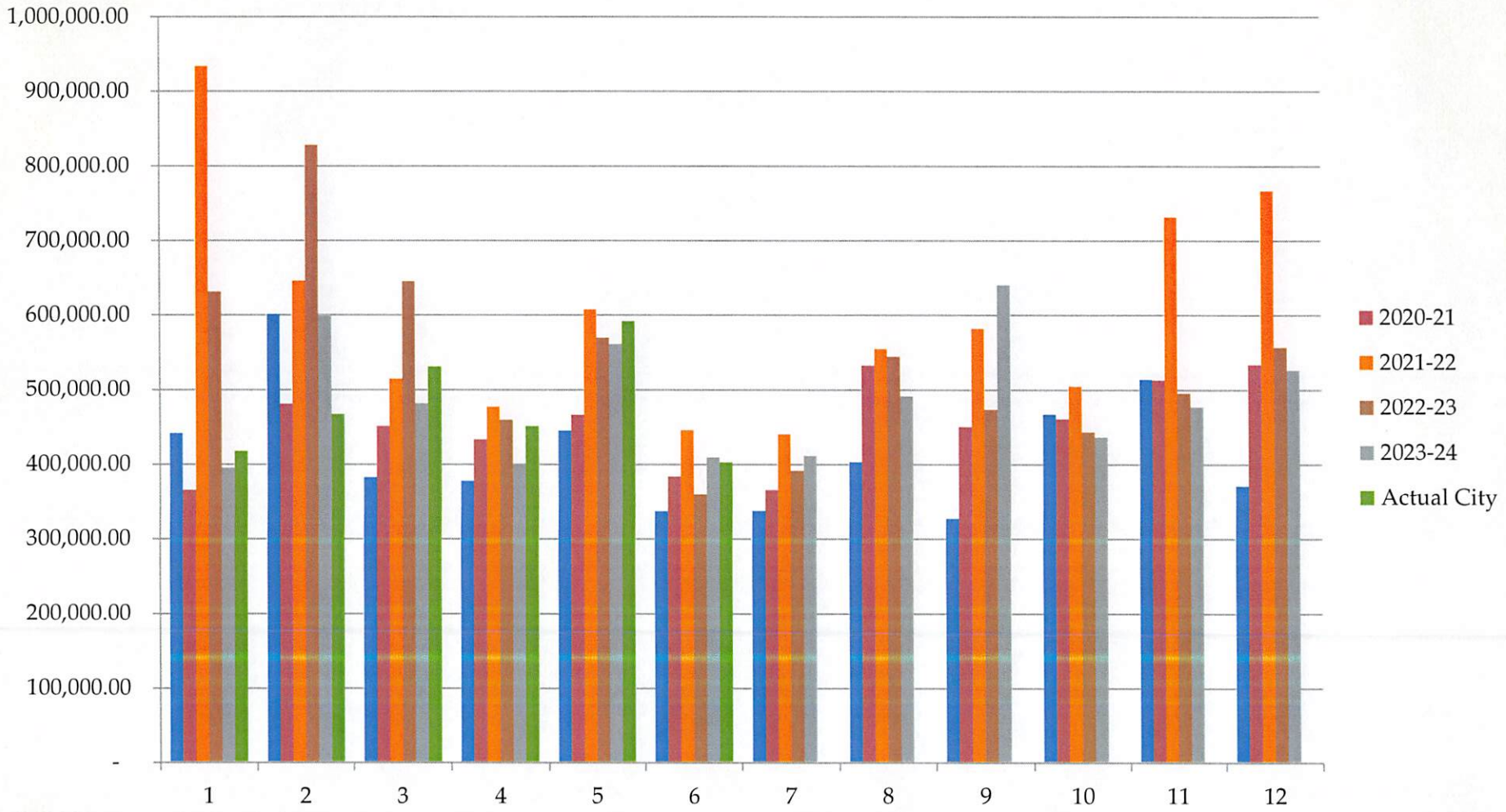

City of Windcrest

Sales Tax less SA Annexation

Fund	YTD Revenues	YTD Expenditures	Current Cash Balance
General	$5,979,708.75	$5,171,044..20	$7,022,272.78
Garbage	$1,677,109.42	$1,251,099.14	$30,103.57
Asset Seizure - Federal	$6.47	$0.00	$395.98
School Crossing Guard	$3,958.54	$53.96	$16,076.86
Police Donations	$5,630.52	$3,571.19	$1,869.05
Asset Seizure - State	$264.49	$0.00	$438.14
Police Education Training	$2,607.61	$125.00	$11,511.29
Economic Development Corporation	n/a	n/a	$1,136,895.43
Court Technology	$13,016.88	$3,548.90	$23,768.64
Court Building Security	$15,200.07	$0.00	$807.54
Hotel / Motel Tax	$131,779.73	$205,994.80	$180,278.76
Debt Service	$636,296.22	$526,125.00	$0.03
WCCPD	$291,323.55	$577,756.94	$294,591.12
Capital Projects – Streets	$283,186.28	$468,681.95	$47,334.86
Public, Education & Government	$0.00	$0.00	$0.00
2019 Series A	$5,367.52	$0.00	$5,367.52
Grant Fund	$0.00	$0.00	$0.00
Pooled Cash			$6,031,412.06
Total Cash (Excluding EDC)			$13,666,228.20

Finance Department
Momorandum

Subject: Unaudited Monthly Financial Report-Month ended March 31, 2025

Attached please find the Unaudited Monthly financial reports. This cover memo will highlight unusual events or variances related to the report period. Unaudited reports are prepared monthly to provide relevant financial information throughout the fiscal year, until the Annual Comprehensive Financial Report is prepared at the end of each accounting period.

Highlights for this reporting period are:

-The monthly financial report is prepared subsequent to the 2nd Council Meeting of the following month.

- Because various revenues are 30-60 days behind, March revenues do not reflect all cumulative revenues such as the Sales Tax and other miscellaneous types. March Sales Tax (March Economic activity), for example, will not be received until the end of May 2025.

-As of March 31, 2025, the City has $13,666,228 in its cash portfolio, of which $6,963,957.46 is invested in TexPool and had a yield of 4.3345%. The remaining funds are invested at Frost Bank in various accounst and had a yield of 3.40% in the month of March 30, 2025.

-Year-to-Date General Fund budget completed: 50.00%

-Special Services Department budget completed: 58.86%
-Fleet Mechanic Department budget completed: 68.76%
-Civic Center Department budget completed: 52.76%
-Contract Services Department budget completed: 68.33%
-Tech Support Department budget completed: 53.38%
-Animal Control Department budget completed: 68.53%
-City Management Department budget completed: 60.65%

-Year-to-date revenues (56.36%) and expenses (47.11%) for the general fund are shown in a comparative chart below through the month ending March 31st for the most current 6 years. The differences in revenues and expenses are due to the specifics of that year's situation and timing and does not reflect any shortfall of revenues or excess spending.

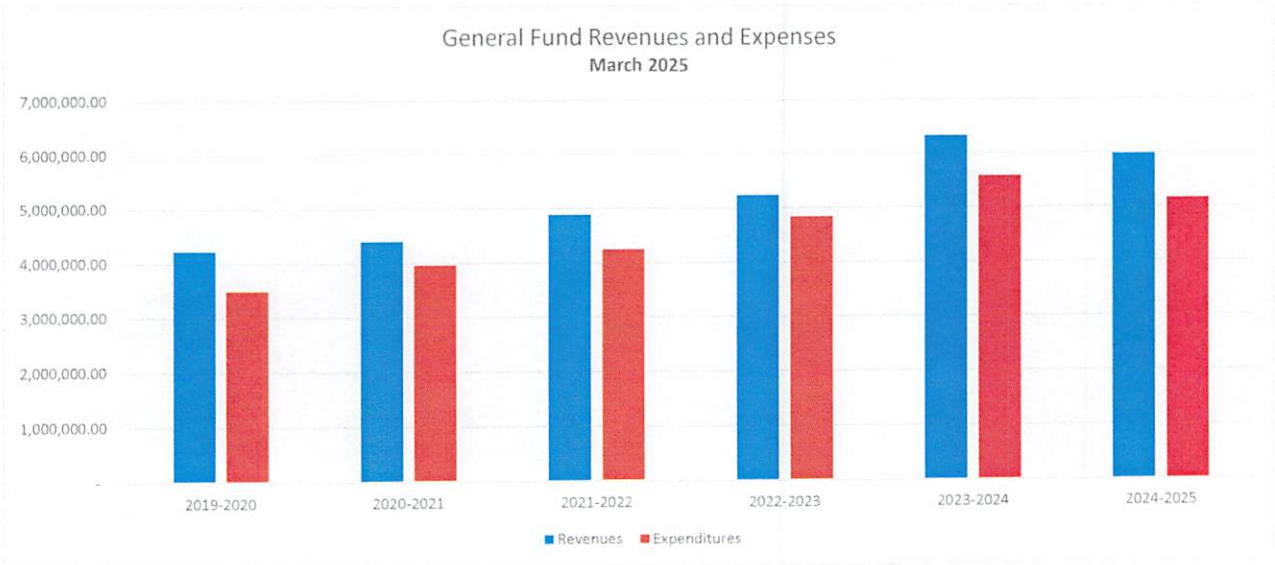

The financial statements are for management use only and are subject to change. The financial statements presented are done so on a modified accrual basis and are subject to change at year end (September 30) when additional information is made available and financial adjustments are completed.

Monthly Financial Report (MFR) as of
March 31, 2025

Table of Contents

Treasurer's Report

Bank Account Summary

Sales Tax Graphs
- Total City of Windcrest Sales Tax
- City of Windcrest Sales Tax - SA Annexation
- Sales tax associated with the SA Annexation

General Fund:
- Balance Sheet, Financial Statement Summary and Financial Statement Summary

Garbage Fund:
- Balance Sheet, Financial Statement Summary and Financial Statement Summary

Hotel Motel Fund:
- Balance Sheet, Financial Statement Summary and Financial Statement Summary

Debt Service Fund:
- Balance Sheet, Financial Statement Summary and Financial Statement Summary

Windcrest Crime Control & Prevention District Fund:
- Balance Sheet, Financial Statement Summary and Financial Statement Summary

Capital Projects Street Fund:
- Balance Sheet, Financial Statement Summary and Financial Statement Summary

2019 Series A Fund:
- Balance Sheet, Financial Statement Summary and Financial Statement Summary

2019 Series B Fund:
- Balance Sheet, Financial Statement Summary and Financial Statement Summary

Summary of Total Assets in Non-Major Funds:

Asset Seizure Fund - Federal	$	396
County Fire Contribution	$	-
School Crossing Guard	$	16,077
Police Donations	$	1,869
Asset Seizure Fund - State	$	438
Police Education Training Fund	$	11,511
Court Technology Fund	$	23,769
Court Building Security Fund	$	808

March 31, 2025

3/31/2025

Treasurer's Report to Council Members:

The following summary and attached report is the monthly financial report for March 2025
This report covers 50.00% of the current fiscal year. If you would like additional detail to support the report, it is available at the City Manager's office.

	Current Month	Prior Year	Current Y.T.D.	Prior Y.T.D.	Y.T.D. % to Budget
General Fund:					
Income (1)	$ 786,026	$ 1,442,748	$ 5,979,709	$ 6,315,601	56.36%
Expenditures (2)	$ 846,007	$ 1,417,301	$ 5,171,044	$ 5,521,299	47.11%
Net	$ (59,981)	$ 25,447	$ 808,665	$ 794,302	
Garbage Fund:					
Income	$ 212,394	$ 215,802	$ 167,710,942	$ 1,390,518	51.40%
Expenditures	$ 341,932	$ 231,887	$ 1,251,099	$ 892,988	36.02%
	$ (129,538)	$ (16,086)	$ 166,459,843	$ 497,529	
Debt Service Fund:					
Income	$ 54,906	$ 131,967	$ 636,296	$ 540,458	
Transfers In	$ -	$ -	$ -	$ -	
Expenditures	$ -	$ 515,125	$ 526,125	$ 515,125	
Net	$ 54,906	$ (383,158)	$ 110,171	$ 25,333	
Capital Projects Fund:					
Income	$ 57,676	$ 61,571	$ 283,186	$ 194,309	
Expenditures	$ 68,740	$ 1,100	$ 468,682	$ 1,100	
Transfers Out	$ -	$ -	$ -	$ -	
Net	$ (11,064)	$ 60,471	$ (185,496)	$ 193,209	
2019 Series A					
Income	$ 14	$ 1,421	$ 5,368	$ 7,501	
Expenditures	$ -	$ -	$ -	$ 2,500	
Transfers Out	$ -	$ -	$ -		
Net	$ 14	$ 1,421	$ 5,368	$ 5,001	
Total Funds:					
Income	$ 1,111,016	$ 1,853,509	$ 174,615,501	$ 8,448,387	
Expenditures	$ 1,256,680	$ 2,165,413	$ 7,416,950	$ 6,933,012	
Transfers In / (Out)	$ -	$ -	$ -	$ -	
Net All Funds	$ (145,664)	$ (311,904)	$ 167,198,550	$ 1,515,375	
Sales Tax Collections (Actual Received):					
Crime Control District	57,471	$ 79,476	$ 332,821	$ 619,457	
EDC	$ 57,560	$ 79,527	$ 333,041	$ 619,831	
General Fund	$ 230,239	$ 318,109	$ 1,332,163	$ 2,561,225	
Ad Valorem Tax Offset	$ 57,560	$ 79,527	$ 333,041	$ 619,831	
For Street Maintenance	$ 57,560	$ 79,527	$ 333,041	$ 619,831	
Net Sales Tax	**$ 460,389**	**$ 636,167**	**$ 2,664,105**	**$ 5,040,174**	
Annexed Area to S.A.	$ -	$ (147,096)	$ -	$ (1,012,693)	

We recommend that this Treasurer's Report be approved.

Respectfully Submitted,

Natalia Witmer
Mun. Finance Officer/ Interim City Manager

March 31, 2025

3/31/2025

Treasurer's Report to Council Members:

The following summary and attached report is the monthly financial report for March 2025
This report covers 50.00% of the current fiscal year. If you would like additional detail to support the report, it is available at the City Manager's office.

	Current Month	Prior Year	Current Y.T.D.	Prior Y.T.D.	Y.T.D. % to Budget
General Fund:					
Income (1)	$ 786,026	$ 1,442,748	$ 5,979,709	$ 6,315,601	56.36%
Expenditures (2)	$ 846,007	$ 1,417,301	$ 5,171,044	$ 5,521,299	47.11%
Net	$ (59,981)	$ 25,447	$ 808,665	$ 794,302	
Garbage Fund:					
Income	$ 212,394	$ 215,802	$ 167,710,942	$ 1,390,518	51.40%
Expenditures	$ 341,932	$ 231,887	$ 1,251,099	$ 892,988	36.02%
	$ (129,538)	$ (16,086)	$ 166,459,843	$ 497,529	
Debt Service Fund:					
Income	$ 54,906	$ 131,967	$ 636,296	$ 540,458	
Transfers In	$ -	$ -	$ -	$ -	
Expenditures	$ -	$ 515,125	$ 526,125	$ 515,125	
Net	$ 54,906	$ (383,158)	$ 110,171	$ 25,333	
Capital Projects Fund:					
Income	$ 57,676	$ 61,571	$ 283,186	$ 194,309	
Expenditures	$ 68,740	$ 1,100	$ 468,682	$ 1,100	
Transfers Out	$ -	$ -	$ -	$ -	
Net	$ (11,064)	$ 60,471	$ (185,496)	$ 193,209	
2019 Series A					
Income	$ 14	$ 1,421	$ 5,368	$ 7,501	
Expenditures	$ -	$ -	$ -	$ 2,500	
Transfers Out	$ -	$ -	$ -		
Net	$ 14	$ 1,421	$ 5,368	$ 5,001	
Total Funds:					
Income	$ 1,111,016	$ 1,853,509	$ 174,615,501	$ 8,448,387	
Expenditures	$ 1,256,680	$ 2,165,413	$ 7,416,950	$ 6,933,012	
Transfers In / (Out)	$ -	$ -	$ -	$ -	
Net All Funds	$ (145,664)	$ (311,904)	$ 167,198,550	$ 1,515,375	
Sales Tax Collections (Actual Received):					
Crime Control District	57,471	$ 79,476	$ 332,821	$ 619,457	
EDC	$ 57,560	$ 79,527	$ 333,041	$ 619,831	
General Fund	$ 230,239	$ 318,109	$ 1,332,163	$ 2,561,225	
Ad Valorem Tax Offset	$ 57,560	$ 79,527	$ 333,041	$ 619,831	
For Street Maintenance	$ 57,560	$ 79,527	$ 333,041	$ 619,831	
Net Sales Tax	**$ 460,389**	**$ 636,167**	**$ 2,664,105**	**$ 5,040,174**	
Annexed Area to S.A.	$ -	$ (147,096)	$ -	$ (1,012,693)	

We recommend that this Treasurer's Report be approved.

Respectfully Submitted,

Natalia Witmer

Mun. Finance Officer/ Interim City Manager

CITY OF WINDCREST FINANCE SUMMARY
For the Period Ending March 2025

		Account	Interest Rate
Frost Bank Accounts:			
Pooled Checking	$	6,031,412	3.40%
MEIA Proceeds	$	33,862	3.40%
General Fund Money Market	$	6,699	3.40%
General Fund Development Escrow	$	-	
General Fund Certificate of Deposit	$	26,498	3.40%
Garbage Fund Checking	$	29,146	3.40%
Garbage Fund Money Market	$	525	3.40%
Debt Service Fund	$	0	3.40%
Capital Projects Street Fund	$	27,426	3.40%
Hotel/Motel Occupancy Tax Fund	$	180,279	3.40%
Windcrest Crime Control & Prevention Dist. Fund	$	294,591	3.40%
Asset Forfeiture/Seizure Savings (Federal)	$	396	3.40%
School Crossing Guard Savings	$	16,077	3.40%
Police Donation Savings	$	1,869	3.40%
Asset Forfeiture/Seizure Savings (State)	$	438	3.40%
Police Education/Training Savings	$	11,511	3.40%
Municipal Court Technology Fund	$	23,769	3.40%
Municipal Court Building Security Fund	$	808	3.40%
2019 Series A	$	5,368	3.40%
Total - Frost National Bank	**$**	**6,690,674**	
INVESTMENTS:			
Texpool (breakout by fund on following page)	$	6,963,957	4.3345%
Texpool for Streets	$	11,597	4.3345%
Total TexPool	**$**	**6,975,554**	
TOTAL ALL FUNDS	**$**	**13,666,228**	

Texpool Breakout by Fund

Fund #	Fund Name	Balance 3/31/2025
1	General Fund MEIA Proceeds	4,785,951.67
1	General Fund	2,169,261.56
2	Garbage	432.15
17	Debt Service	-
19	Capital Project Street	8,312.08
9	Asset Seizure Fund - State	-
	Total	6,963,957.46

BALANCE SHEET
AS OF: MARCH 31ST, 2025

01 -GENERAL FUND

ACCOUNT #	ACCOUNT DESCRIPTION	BALANCE
ASSETS		
======		
01-1100	CASH - FROST OPERATING	0.00
01-1102	CLAIM ON CASH	3,639,253.59
01-1104	MEIA PROCEEDS	33,861.81
01-1105	SAVINGS	6,699.38
01-1110	PETTY CASH	1,700.00
01-1111	STORE PETTY CASH	100.00
01-1112	PREPAID POSTAGE	5,049.88
01-1120	CERT. OF DEPOSIT-RESTRICTED	26,498.36
01-1124	INVESTMENT/TEXPOOL MEIA	4,785,951.67
01-1125	INVESTMENT/TEXPOOL	2,169,261.56
01-1127	IBC BANK ESCROW	0.00
01-1128	EXPENSE CARD	12,288.00
01-1129	EXPENCE CARD A	933.39
01-1130	EXPENCE CARD B	1,385.82
01-1131	EXPENCE CARD C	1,204.93
01-1132	EXPENCE CARD D	2,628.17
01-1133	EXPENCE CARD E	0.00
01-1134	EXPENCE CARD F	755.51
01-1135	EXPENCE TRAVEL CARD 1	1,870.47
01-1136	EXPENCE TRAVEL CARD 2	311.67
01-1137	EXPENCE TRAVEL CARD 3	1,301.25
01-1138	EXPENCE TRAVEL CARD 4	1,823.06
01-1139	EXPENCE CARD H	1,960.22
01-1140	EXPENCE CARD G	1,629.89
01-1141	EXPENCE CARD I	1,609.17
01-1142	EXPENCE CARD J	454.92
01-1143	EXPENCE CARD K	115.77
01-1201	PREPAID INSURANCE	0.00
01-1204	PREPAID SALES TAX	0.00
01-1205	PREPAID EMS SERVICE	0.00
01-1210	PREPAID VOLUNTEER PENSION	0.00
01-1215	PREPAID MAINTENANCE CONTRACTS	0.00
01-1310	DUE FROM GARBAGE FUND	0.00
01-1320	DUE FROM ASSET FORF/SEIZ	0.00
01-1325	DUE FROM S C G FUND	0.00
01-1330	DUE FROM COUNTY FIRE CONT	0.00
01-1335	DUE FROM DARE PROGRAM FN	0.00
01-1340	DUE FROM POLICE DONATION ACCT	0.00
01-1345	DUE FROM ASSET SEIZ/STATE	0.00
01-1350	DUE FROM POLICE TRAINING FUND	0.00
01-1351	DUE FROM ROOSEVELT SCHOLARSHIP	0.00
01-1353	DUE FROM COURT TECH. FUND	0.00
01-1354	DUE FROM COURT BLDG. SEC. FUND	0.00
01-1355	DUE FROM EDC	23,882.67
01-1356	DUE FROM HOTEL/MOTEL TAX FUND	0.00
01-1357	DUE FROM TX TAX NOTES 2002 FUN	0.00
01-1380	DUE FROM WCCPD	0.00
01-1381	DUE FROM TX TAX NOTES 2005	0.00

01 -GENERAL FUND

ACCOUNT #	ACCOUNT DESCRIPTION	BALANCE		
01-1383	DUE FROM HRA	0.00		
01-1501	A/R-ADVALOREM TAXES	105,902.71		
01-1502	DEFERRED EXPENDITURES	0.00		
01-1504	ALLOWANCE FOR DOUBT -WARRANTS	0.00		
01-1505	ALLOW FOR DOUBTFUL ACCTS	(16,355.18)		
01-1510	A/R-SALES TAX	(0.96)		
01-1515	A/R-LIQUOR TAX	0.00		
01-1562	A/R - GRANT FUNDS	0.00		
01-1601	A/R-MISC FEES	1,522.53		
01-1602	A/R WARRANTS - CITY PORTION	0.00		
01-1605	A/R-FRANCHISE	0.00		
01-1608	A/R - UNAPPLIED CREDITS	0.00		
01-1620	A/R-WATER DISTRICT #10	0.00		
01-1635	A/R-MISC. II	2.00		
01-1636	A/R POST OFFICE PETTY CASH	200.00		
			10,813,802.26	
	TOTAL ASSETS			10,813,802.26
				==========
LIABILITIES				
01-2200	WAGES PAYABLE	0.00		
01-2205	FED WITHHOLDING	0.00		
01-2210	FICA PAYABLE - EMPLOYER	0.00		
01-2215	FICA PAYABLE - EMPLOYEE	0.00		
01-2220	MEDICARE PAYABLE EMPLOYER	0.00		
01-2225	MEDICARE PAYABLE EMPLOYEE	0.00		
01-2230	TMRS PAYABLE	79,377.82		
01-2235	TWC TAXES PAYABLE	0.00		
01-2240	TRUSTEE PAYABLE	0.00		
01-2242	SEC 457B DEF.COMP. PAYABLE	170.00		
01-2245	LIFE INSURANCE PAYABLE	(79.14)		
01-2246	SHORT TERM DISABILITY	(677.79)		
01-2248	LEGALSHIELD VOL DED	0.00		
01-2250	SUPPLEMENTAL INSURANCE	783.04		
01-2251	DEPENDENT DENTAL INSURANCE	1,004.17		
01-2252	DEPENDENT VISION INSURANCE	(52.87)		
01-2255	DEP HLTH/OPT LIFE PAYABLE	7,030.47		
01-2256	A/P FSA Med Ded	1,555.98		
01-2257	A/P FSA DEP DED	0.00		
01-2258	DUE TO EWALD TRACTOR	0.00		
01-2259	A/P MISC DED	0.00		
01-2310	DUE TO GARBAGE FUND	0.00		
01-2320	DUE TO ASSET FORF/SEIZ FN	0.00		
01-2325	DUE TO S.C.G. FUND	125.00		
01-2330	DUE TO COUNTY FIRE CONTRI	0.00		
01-2335	DUE TO DARE PROGRAM FUND	0.00		
01-2340	DUE TO POLICE DONATION FUND	0.00		
01-2345	DUE TO ASSET SEIZURE/STAT	0.00		
01-2350	DUE TO POLICE TRAINING FUND	0.00		

BALANCE SHEET
AS OF: MARCH 31ST, 2025

01 -GENERAL FUND

ACCOUNT #	ACCOUNT DESCRIPTION	BALANCE
01-2351	DUE TO ROOSEVELT SCHOLARSHIP	0.00
01-2353	DUE TO COURT TECHNOLOGY FUND	0.00
01-2354	DUE TO COURT BLDG SECURITY FUN	0.00
01-2355	DUE TO EDC FUND	0.00
01-2356	DUE TO HOTEL/MOTEL TAX FUND	0.00
01-2357	DUE TO TEXAS TAX NOTE FUND	0.00
01-2358	DUE TO WCC&PD FUND	0.00
01-2400	A/P PENDING	(55,999.58)
01-2401	A/P-GENERAL FUND	0.00
01-2402	A/P-COMP TO VICTIMS(CVC)	0.00
01-2403	A/P-REHABILITATION(CR)	0.00
01-2404	A/P-CRIMINAL JUSTICE(CJP)	0.00
01-2405	A/P-PERSONNEL TRAIN(JCPT)	0.00
01-2406	A/P-MANAGEMENT(LEMI)	0.00
01-2407	A/P-OFFICIERS ADM(LEOA)	0.00
01-2408	A/P-GENERAL REVENUE (GR)	0.00
01-2409	A/P-LIAB INS (OCL)	0.00
01-2410	A/P-SALES TAX	(111.09)
01-2411	BOND ESCROW (COURT)	9,768.00
01-2412	A/P-CONTINUING ED(LEOCE)	0.00
01-2413	A/P TIME PAYMENT	62.50
01-2414	A/P MUN. BLDG. SECURITY (MCBS)	0.00
01-2415	A/P FUGITIVE APPREHENSION (FA)	0.00
01-2416	A/P CONSOLIDATED CRT COST(CCC)	107,356.42
01-2417	A/P JUVENILE CRIME(JCD)	0.00
01-2418	A/P FTA FEE (FTA)	3,941.04
01-2420	DEPOSITS-CONTRACTORS	0.00
01-2421	A/P-RESTITUTION	0.00
01-2422	DEPOSITS-VEHICLE STORAGE	2,950.00
01-2423	AP-CHILD SAFETY SEAT & BELT	220.46
01-2424	A/P CORRECTIONAL MGMT (CMI)	0.00
01-2425	DEPOSITS-CIVIC CENTER	18,833.00
01-2426	A/P INDIGENT DEFENSE FEE	146.65
01-2427	DEPOSITS - TACO CABANA	(100.00)
01-2428	A/P - MUNI SVC BUREAU	0.00
01-2429	A/P - STATE TRAFFIC FEES	29,164.48
01-2430	BOND REFUNDS (COURT)	4,436.90
01-2431	A/P - STATE JURY FEE (SJRF)	296.67
01-2432	A/P - EXPUNCTION FEE (EXPUNG)	0.00
01-2433	A/P-RESTITUT FEE-STATE (RSTS)	0.00
01-2434	A/P-JUDICIAL FEE-STATE (JFCT)	398.84
01-2436	A/P-LINEBARGER COURT COLLECTIO	18,055.29
01-2437	A/P-CIVIL JUSTICE FINE (CJFS)	1.95
01-2438	BONDS APPLIED (COURT)	0.00
01-2440	FROST BANK ESCROW FUNDS	0.00
01-2449	A/P CAPITAL LEASE	0.00
01-2450	A/P LEASE	0.00
01-2451	A/P SALES TAX PAYBACK	0.00
01-2455	A/P VFFP	0.00
01-2470	ACCRUED COMPENSATED ABSENCES	0.00

01 -GENERAL FUND

ACCOUNT #	ACCOUNT DESCRIPTION	BALANCE		
01-2471	PENDING PRIOR PERIOD AJE	(0.07)		
01-2478	RESERVE PRIOR YEAR ENCUMBRANCE	0.00		
01-2501	DEFERRED REVENUE-TAXES	90,095.33		
01-2502	DEFERRED REVENUE - OTHER	0.00		
01-2503	DEFERRED REVENUE - WARRANTS	0.00		
01-2505	AP MEIA TO BEXAR COUNTY	273,381.98		
01-2506	AP MEIA TO NEISD	4,245,689.30		
01-2507	AP MEIA COSA	0.00		
01-2508	INTEREST MEIA	185,277.84		
	TOTAL LIABILITIES		5,023,102.59	
EQUITY				
======				
01-3201	FUND BALANCE	4,447,035.12		
01-3202	FUND BALANCE-RESTRICTED	535,000.00		
01-3205	FOR ECONOMIC IMPACT	0.00		
01-3207	FOR CASHFLOW	0.00		
	TOTAL BEGINNING EQUITY	4,982,035.12		
	TOTAL REVENUE	5,979,708.75		
	TOTAL EXPENSES	5,171,044.20		
	TOTAL INCREASE/(DECREASE) IN FUND BAL.	808,664.55		
	TOTAL EQUITY & FUND BALANCE		5,790,699.67	
	TOTAL LIABILITIES, EQUITY & FUND BALANCE			10,813,802.26
				==========

REVENUE & EXPENSE REPORT (UNAUDITED)
AS OF: MARCH 31ST, 2025

01 -GENERAL FUND

% OF YEAR COMPLETED: 50.00

	ORIGINAL BUDGET	AMENDED BUDGET	CURRENT PERIOD	YEAR TO DATE BALANCE	PRIOR YEAR YTD BALANCE	TOTAL ENCUMBERED	% OF BUDGET	BUDGET BALANCE
REVENUE SUMMARY								
ALL REVENUES	10,649,905	10,610,297	786,025.91	5,979,708.75	6,326,276.92	0.00	56.36	4,630,588.36
TOTAL REVENUES	10,649,905	10,610,297	786,025.91	5,979,708.75	6,326,276.92	0.00	56.36	4,630,588.36
EXPENDITURE SUMMARY								
01-ADMINISTRATION								
SALARIES & BENEFITS	398,463	398,463	28,123.36	170,786.02	145,233.15	0.00	42.86	227,676.70
OTHER EXPENSES	34,500	34,500	42.89	19,841.39	7,965.55	0.00	57.51	14,658.61
CAPITAL EXPENSES	0	0	0.00	0.00	0.00	0.00	0.00	0.00
OTHER INCOME/EXPENSES	0	0	0.00	0.00	0.00	0.00	0.00	0.00
TOTAL 01-ADMINISTRATION	432,963	432,963	28,166.25	190,627.41	153,198.70	0.00	44.03	242,335.31
02-POLICE DEPARTMENT								
SALARIES & BENEFITS	2,860,753	2,860,753	159,248.66	1,090,875.58	1,181,696.47	0.00	38.13	1,769,877.41
OTHER EXPENSES	225,800	225,800	4,818.48	73,966.84	102,776.18	0.00	32.76	151,833.16
CAPITAL EXPENSES	0	0	0.00	0.00	0.00	0.00	0.00	0.00
OTHER INCOME/EXPENSES	0	0	0.00	0.00	0.00	0.00	0.00	0.00
TOTAL 02-POLICE DEPARTMENT	3,086,553	3,086,553	164,067.14	1,164,842.42	1,284,472.65	0.00	37.74	1,921,710.57
03-FIRE DEPARTMENT								
SALARIES & BENEFITS	1,292,397	1,292,397	93,443.00	589,738.16	556,348.14	0.00	45.63	702,658.71
OTHER EXPENSES	354,300	354,300	22,403.23	180,497.97	165,059.74	6,406.29	52.75	167,395.74
CAPITAL EXPENSES	0	0	0.00	0.00	0.00	0.00	0.00	0.00
OTHER INCOME/EXPENSES	0	0	0.00	0.00	0.00	0.00	0.00	0.00
TOTAL 03-FIRE DEPARTMENT	1,646,697	1,646,697	115,846.23	770,236.13	721,407.88	6,406.29	47.16	870,054.45
04-SPECIAL SERVICES								
SALARIES & BENEFITS	84,942	84,942	8,181.23	30,774.12	6,131.40	0.00	36.23	54,168.08
OTHER EXPENSES	177,200	177,200	6,628.53	123,534.45	117,490.99	0.00	69.71	53,665.55
CAPITAL EXPENSES	0	0	0.00	0.00	0.00	0.00	0.00	0.00
OTHER INCOME/EXPENSES	0	0	0.00	0.00	0.00	0.00	0.00	0.00
TOTAL 04-SPECIAL SERVICES	262,142	262,142	14,809.76	154,308.57	123,622.39	0.00	58.86	107,833.63
06-PARKS & RECREATION								
OTHER EXPENSES	244,514	244,514	28,176.49	65,582.97	88,688.87	9,222.60	30.59	169,708.75
CAPITAL EXPENSES	0	0	0.00	0.00	0.00	0.00	0.00	0.00
OTHER INCOME/EXPENSES	0	0	0.00	0.00	0.00	0.00	0.00	0.00
TOTAL 06-PARKS & RECREATION	244,514	244,514	28,176.49	65,582.97	88,688.87	9,222.60	30.59	169,708.75
07-FLEET MECHANIC								
SALARIES & BENEFITS	80,275	80,275	6,222.52	35,580.44	35,951.26	0.00	44.32	44,694.23
OTHER EXPENSES	162,400	162,400	17,353.67	128,376.60	66,071.06	2,916.12	80.85	31,107.28
CAPITAL EXPENSES	0	0	0.00	0.00	0.00	0.00	0.00	0.00
OTHER INCOME/EXPENSES	0	0	0.00	0.00	0.00	0.00	0.00	0.00
TOTAL 07-FLEET MECHANIC	242,675	242,675	23,576.19	163,957.04	102,022.32	2,916.12	68.76	75,801.51

REVENUE & EXPENSE REPORT (UNAUDITED)
AS OF: MARCH 31ST, 2025

01 -GENERAL FUND
FINANCIAL SUMMARY

% OF YEAR COMPLETED: 50.00

	ORIGINAL BUDGET	AMENDED BUDGET	CURRENT PERIOD	YEAR TO DATE BALANCE	PRIOR YEAR YTD BALANCE	TOTAL ENCUMBERED	% OF BUDGET	BUDGET BALANCE
08-COURT								
SALARIES & BENEFITS	449,751	449,751	30,967.65	191,024.32	183,437.23	0.00	42.47	258,726.46
OTHER EXPENSES	108,550	108,550	12,314.48	70,686.41	75,482.35	775.00	65.83	37,088.59
CAPITAL EXPENSES	0	0	0.00	0.00	0.00	0.00	0.00	0.00
OTHER INCOME/EXPENSES	0	0	0.00	0.00	0.00	0.00	0.00	0.00
TOTAL 08-COURT	558,301	558,301	43,282.13	261,710.73	258,919.58	775.00	47.02	295,815.05
10-FACILITY DIVISION								
OTHER EXPENSES	183,000	183,000	12,230.40	60,354.29	59,834.44	139.28	33.06	122,506.43
CAPITAL EXPENSES	0	0	0.00	0.00	0.00	0.00	0.00	0.00
OTHER INCOME/EXPENSES	0	0	0.00	0.00	0.00	0.00	0.00	0.00
TOTAL 10-FACILITY DIVISION	183,000	183,000	12,230.40	60,354.29	59,834.44	139.28	33.06	122,506.43
11-CIVIC CENTER								
SALARIES & BENEFITS	235,565	235,565	19,876.43	122,125.77	67,356.33	0.00	51.84	113,439.12
OTHER EXPENSES	108,000	108,000	9,724.64	53,499.71	40,472.92	5,632.53	54.75	48,867.76
CAPITAL EXPENSES	0	0	0.00	0.00	0.00	0.00	0.00	0.00
OTHER INCOME/EXPENSES	0	0	0.00	0.00	0.00	0.00	0.00	0.00
TOTAL 11-CIVIC CENTER	343,565	343,565	29,601.07	175,625.48	107,829.25	5,632.53	52.76	162,306.88
14-CONTRACT SERVICES								
OTHER EXPENSES	1,004,972	1,085,553	81,911.17	741,797.86	791,597.49	0.01	68.33	343,754.64
CAPITAL EXPENSES	0	0	0.00	0.00	0.00	0.00	0.00	0.00
OTHER INCOME/EXPENSES	0	0	0.00	0.00	0.00	0.00	0.00	0.00
TOTAL 14-CONTRACT SERVICES	1,004,972	1,085,553	81,911.17	741,797.86	791,597.49	0.01	68.33	343,754.64
15-TECH SUPPORT								
OTHER EXPENSES	414,326	414,326	48,149.58	215,349.29	187,545.13	5,820.45	53.38	193,156.38
CAPITAL EXPENSES	0	0	0.00	0.00	0.00	0.00	0.00	0.00
OTHER INCOME/EXPENSES	0	0	0.00	0.00	0.00	0.00	0.00	0.00
TOTAL 15-TECH SUPPORT	414,326	414,326	48,149.58	215,349.29	187,545.13	5,820.45	53.38	193,156.38
16-PUBLIC WORKS								
SALARIES & BENEFITS	715,566	715,566	51,726.55	319,134.54	345,954.75	0.00	44.60	396,431.27
OTHER EXPENSES	168,691	168,691	19,169.26	51,293.51	58,301.54	79.95	30.45	117,317.40
CAPITAL EXPENSES	0	0	0.00	0.00	0.00	0.00	0.00	0.00
OTHER INCOME/EXPENSES	0	0	0.00	0.00	0.00	0.00	0.00	0.00
TOTAL 16-PUBLIC WORKS	884,257	884,257	70,895.81	370,428.05	404,256.29	79.95	41.90	513,748.67
17-ANIMAL CONTROL								
SALARIES & BENEFITS	133,827	133,827	6,838.44	55,401.24	50,989.52	0.00	41.40	78,425.55
OTHER EXPENSES	156,900	306,900	83,551.96	245,286.92	81,344.55	1,350.00	80.36	60,263.08
CAPITAL EXPENSES	0	0	0.00	0.00	0.00	0.00	0.00	0.00
OTHER INCOME/EXPENSES	0	0	0.00	0.00	0.00	0.00	0.00	0.00
TOTAL 17-ANIMAL CONTROL	290,727	440,727	90,390.40	300,688.16	132,334.07	1,350.00	68.53	138,688.63

REVENUE & EXPENSE REPORT (UNAUDITED)
AS OF: MARCH 31ST, 2025

01 -GENERAL FUND
FINANCIAL SUMMARY

% OF YEAR COMPLETED: 50.00

	ORIGINAL BUDGET	AMENDED BUDGET	CURRENT PERIOD	YEAR TO DATE BALANCE	PRIOR YEAR YTD BALANCE	TOTAL ENCUMBERED	% OF BUDGET	BUDGET BALANCE
19-CODE ENFORCEMENT								
SALARIES & BENEFITS	75,281	75,281	4,858.29	28,538.07	27,818.51	0.00	37.91	46,743.31
OTHER EXPENSES	3,000	3,000	0.00	0.00	0.00	0.00	0.00	3,000.00
CAPITAL EXPENSES	0	0	0.00	0.00	0.00	0.00	0.00	0.00
OTHER INCOME/EXPENSES	0	0	0.00	0.00	0.00	0.00	0.00	0.00
TOTAL 19-CODE ENFORCEMENT	78,281	78,281	4,858.29	28,538.07	27,818.51	0.00	36.46	49,743.31
20-FINANCE								
SALARIES & BENEFITS	406,464	406,464	35,459.50	200,880.65	181,248.32	0.00	49.42	205,583.00
OTHER EXPENSES	19,500	19,500	224.34	9,802.99	7,836.66	0.00	50.27	9,697.01
CAPITAL EXPENSES	0	0	0.00	0.00	0.00	0.00	0.00	0.00
OTHER INCOME/EXPENSES	0	0	0.00	0.00	0.00	0.00	0.00	0.00
TOTAL 20-FINANCE	425,964	425,964	35,683.84	210,683.64	189,084.98	0.00	49.46	215,280.01
25-CITY MANAGEMENT								
SALARIES & BENEFITS	219,046	219,046	1,580.52	140,028.35	100,507.00	0.00	63.93	79,017.60
OTHER EXPENSES	14,300	14,300	0.00	1,496.94	702,819.40	0.00	10.47	12,803.06
OTHER INCOME/EXPENSES	0	0	0.00	0.00	0.00	0.00	0.00	0.00
TOTAL 25-CITY MANAGEMENT	233,346	233,346	1,580.52	141,525.29	803,326.40	0.00	60.65	91,820.66
26-POOL								
SALARIES & BENEFITS	0	0	0.00	0.00	0.00	0.00	0.00	0.00
OTHER EXPENSES	17,500	17,500	39.38	201.95	5,698.79	0.00	1.15	17,298.05
CAPITAL EXPENSES	0	0	0.00	0.00	0.00	0.00	0.00	0.00
OTHER INCOME/EXPENSES	0	0	0.00	0.00	0.00	0.00	0.00	0.00
TOTAL 26-POOL	17,500	17,500	39.38	201.95	5,698.79	0.00	1.15	17,298.05
27-POST OFFICE								
SALARIES & BENEFITS	77,672	77,672	3,042.38	28,768.51	36,471.35	0.00	37.04	48,903.90
OTHER EXPENSES	17,600	17,600	0.00	1,691.70	4,208.99	0.00	9.61	15,908.30
CAPITAL EXPENSES	0	0	0.00	0.00	0.00	0.00	0.00	0.00
OTHER INCOME/EXPENSES	0	0	0.00	0.00	0.00	0.00	0.00	0.00
TOTAL 27-POST OFFICE	95,272	95,272	3,042.38	30,460.21	40,680.34	0.00	31.97	64,812.20
28-HUMAN RESOUCES								
OTHER EXPENSES	142,700	142,700	20,339.34	71,051.21	56,808.60	0.00	49.79	71,648.79
OTHER INCOME/EXPENSES	0	0	0.00	0.00	0.00	0.00	0.00	0.00
TOTAL 28-HUMAN RESOUCES	142,700	142,700	20,339.34	71,051.21	56,808.60	0.00	49.79	71,648.79
30-CAPITAL								
OTHER EXPENSES	0	0	0.00	0.00	0.00	0.00	0.00	0.00
CAPITAL EXPENSES	225,772	225,772	29,361.02	53,075.43	51,573.41	0.00	23.51	172,696.57
OTHER INCOME/EXPENSES	0	0	0.00	0.00	0.00	0.00	0.00	0.00
TOTAL 30-CAPITAL	225,772	225,772	29,361.02	53,075.43	51,573.41	0.00	23.51	172,696.57
00-GENERAL EXPENDITURES								
SALARIES & BENEFITS	0	0	0.00	0.00	0.00	0.00	0.00	0.00
TOTAL 00-GENERAL EXPENDITURES	0	0	0.00	0.00	0.00	0.00	0.00	0.00
TOTAL EXPENDITURES	10,813,527	11,044,107	846,007.39	5,171,044.20	5,590,720.09	32,342.23	47.11	5,840,720.49
REVENUE OVER/(UNDER) EXPENDITURES	(163,622)	(433,810)	(59,981.48)	808,664.55	735,556.83	(32,342.23)	178.95-	(1,210,132.13)

REVENUE & EXPENSE REPORT (UNAUDITED)
AS OF: MARCH 31ST, 2025

01 -GENERAL FUND

% OF YEAR COMPLETED: 50.00

REVENUES	ORIGINAL BUDGET	AMENDED BUDGET	CURRENT PERIOD	YEAR TO DATE BALANCE	PRIOR YEAR YTD BALANCE	TOTAL ENCUMBERED	% OF BUDGET	BUDGET BALANCE
01-4101 ADVALOREM TAX CURRENT	3,079,826	3,079,826	3,674.41	3,111,734.93	3,031,881.18	0.00	101.04	(31,909.23)
01-4115 SALES TAX	3,530,772	3,517,179	230,238.90	1,129,847.98	1,032,665.48	0.00	32.12	2,387,331.24
01-4116 SALES TX-AD VALOREM TX OFFSET	899,891	895,060	57,559.72	282,461.98	261,169.16	0.00	31.56	612,598.26
01-4118 HOTEL OCC. TAX FUND TRANSER	260,000	260,000	170,000.00	170,000.00	0.00	0.00	65.38	90,000.00
01-4119 HOTEL OCC.TAX F. TRSFR CAPITAL	0	0	0.00	0.00	0.00	0.00	0.00	0.00
01-4120 MIXED BEVERAGE GROSS RECEIPTS	30,000	30,000	1,946.79	8,296.98	9,584.62	0.00	27.66	21,703.02
01-4121 HOTEL OCC. TAX SPECIAL EVENTS	35,000	35,000	35,000.00	35,000.00	0.00	0.00	100.00	0.00
01-4201 CPS ENERGY FRANCHISE FEES	591,923	591,923	0.00	142,799.63	161,347.08	0.00	24.12	449,123.37
01-4205 AT&T TELECOM FRANCHISE FEES	9,600	9,600	0.00	3,208.53	3,977.02	0.00	33.42	6,391.47
01-4210 TIME WARNER CABLE & TEL FEES	65,000	65,000	0.00	13,611.51	15,172.02	0.00	20.94	51,388.49
01-4215 OTHER TELECOM FEES	1,000	1,000	1,000.00	3,834.08	464.85	0.00	383.41	(2,834.08)
01-4230 FRANCHISE FEES -WATER	3,500	3,500	0.00	0.00	3,347.35	0.00	0.00	3,500.00
01-4301 INTEREST	92,500	104,382	24,509.54	126,993.94	157,661.31	0.00	121.66	(22,611.53)
01-4302 FRANCHISE FEE- SANITATION	1,200	1,200	81.79	780.08	377.39	0.00	65.01	419.92
01-4310 COURT FINES	855,378	842,251	93,893.48	480,292.81	441,001.80	0.00	57.02	361,958.36
01-4320 WINDCREST GIFT SHOP	0	0	0.00	0.00	0.00	0.00	0.00	0.00
01-4401 SWIMMING POOL FEES	0	0	0.00	0.00	0.00	0.00	0.00	0.00
01-4402 SWIMMING POOL CONCESSIONS	0	0	0.00	0.00	0.00	0.00	0.00	0.00
01-4403 SWIMMING POOL B-PARTIES	0	0	0.00	0.00	0.00	0.00	0.00	0.00
01-4408 CONTRACTOR ANNUAL REGISTRATION	1,200	1,200	260.00	1,500.00	940.00	0.00	125.00	(300.00)
01-4409 BUILDING PERMIT FEES	180,000	160,060	19,116.25	61,520.22	91,180.46	0.00	38.44	98,540.15
01-4410 FOOD PERMIT FEES	15,000	15,000	500.00	9,912.95	10,525.00	0.00	66.09	5,087.05
01-4411 FIRE DEPARTMENT FEES	20,000	20,000	3,810.00	15,655.00	7,045.00	0.00	78.28	4,345.00
01-4415 BUSINESS LICENSE FEES	6,500	6,500	90.00	530.00	450.00	0.00	8.15	5,970.00
01-4420 LIQUOR LICENSE FEES	2,000	2,000	0.00	1,420.00	1,190.00	0.00	71.00	580.00
01-4425 VEHICLE STORAGE FEES	30,565	30,565	0.00	(1,346.51)	2.70	0.00	4.41-	31,911.51
01-4430 CIVIC CENTER FEES	52,000	52,000	4,340.00	36,645.00	34,815.00	0.00	70.47	15,355.00
01-4435 DOG TAG & IMPOUNDMENT FEES	450	450	40.00	165.00	340.00	0.00	36.67	285.00
01-4439 MISC. PERMIT FEES	1,100	1,100	10.00	945.00	520.00	0.00	85.91	155.00
01-4440 MISCELLANEOUS FEES	25,000	25,000	1,992.86	13,439.12	13,569.88	0.00	53.76	11,560.88
01-4441 ALARM & PERMIT FEES	5,000	5,000	650.00	3,520.00	3,498.75	0.00	70.40	1,480.00
01-4442 PLATTING/ZONING/VAR FEES	300	300	0.00	0.00	35.00	0.00	0.00	300.00
01-4450 POST OFFICE SUBSIDY	25,000	25,000	0.00	8,333.32	12,499.98	0.00	33.33	16,666.68
01-4451 EDC REIMBURSEMENT	0	0	0.00	0.00	42,245.78	0.00	0.00	0.00
01-4455 WCCPD REIMBURSEMENT	78,000	78,000	0.00	0.00	0.00	0.00	0.00	78,000.00
01-4460 MISCELLANEOUS INCOME	50,000	50,000	7,328.83	89,337.16	39,877.07	0.00	178.67	(39,337.16)
01-4461 WORKER'S COMP	45,000	45,000	0.00	0.00	0.00	0.00	0.00	45,000.00
01-4462 DONATIONS FD	1,000	1,000	400.00	1,650.00	13,100.00	0.00	165.00	(650.00)
01-4463 DONATIONS SPECIAL EVENTS	0	0	0.00	120.00	0.00	0.00	0.00	(120.00)
01-4470 LEASE OF LAND	205,000	205,000	4,583.34	102,500.04	102,500.04	0.00	50.00	102,499.96
01-4471 LEASE OF BUILDING SPACE	1,200	1,200	0.00	0.00	1,200.00	0.00	0.00	1,200.00
01-4475 INCOME - BAD DEBT	0	0	0.00	0.00	0.00	0.00	0.00	0.00
01-4501 GARBAGE FUND ADMIN TRANSFER	450,000	450,000	125,000.00	125,000.00	0.00	0.00	27.78	325,000.00
01-4502 MEIA TERMINATION	0	0	0.00	0.00	815,464.36	0.00	0.00	0.00
01-4513 GRANT PROCEEDS WFD	0	0	0.00	0.00	100.00	0.00	0.00	0.00
01-4514 GRANT PROCEEDS WPD	0	0	0.00	0.00	0.00	0.00	0.00	0.00
01-4515 ARPA FUNDS	0	0	0.00	0.00	0.00	0.00	0.00	0.00
01-4516 ASSET SEIZURE POLICE	0	0	0.00	0.00	16,528.64	0.00	0.00	0.00
01-4549 PROCEEDS SALES OF FIXED ASSETS	0	0	0.00	0.00	0.00	0.00	0.00	0.00

REVENUE & EXPENSE REPORT (UNAUDITED)
AS OF: MARCH 31ST, 2025

01 -GENERAL FUND

% OF YEAR COMPLETED: 50.00

REVENUES	ORIGINAL BUDGET	AMENDED BUDGET	CURRENT PERIOD	YEAR TO DATE BALANCE	PRIOR YEAR YTD BALANCE	TOTAL ENCUMBERED	% OF BUDGET	BUDGET BALANCE
01-4900 PROCEEDS FROM CAPITAL LEASE	0	0	0.00	0.00	0.00	0.00	0.00	0.00
TOTAL REVENUES	10,649,905	10,610,297	786,025.91	5,979,708.75	6,326,276.92	0.00	56.36	4,630,588.36

REVENUE & EXPENSE REPORT (UNAUDITED)
AS OF: MARCH 31ST, 2025

01 -GENERAL FUND

% OF YEAR COMPLETED: 50.00

DEPARTMENTAL EXPENDITURES	ORIGINAL BUDGET	AMENDED BUDGET	CURRENT PERIOD	YEAR TO DATE BALANCE	PRIOR YEAR YTD BALANCE	TOTAL ENCUMBERED	% OF BUDGET	BUDGET BALANCE
01-ADMINISTRATION								
SALARIES & BENEFITS								
01-501-010 ADMIN. SALARIES	263,527	263,527	19,370.27	115,437.51	95,807.89	0.00	43.80	148,089.05
01-501-014 STIPEND	0	0	0.00	0.00	0.00	0.00	0.00	0.00
01-501-015 ADMIN INCENTIVE PAY-BILINGUA	0	0	0.00	0.00	0.00	0.00	0.00	0.00
01-501-018 ADMIN.EDUCATION PAY	1,500	1,500	161.56	969.36	415.44	0.00	64.62	530.64
01-501-020 ADMIN. OVERTIME	2,700	2,700	256.86	1,264.34	349.76	0.00	46.83	1,435.66
01-501-030 SOCIAL SECURITY	20,481	20,481	1,406.16	8,409.60	6,871.20	0.00	41.06	12,071.48
01-501-040 HEALTH INSURANCE	59,353	59,353	3,818.40	27,075.56	22,486.33	0.00	45.62	32,277.44
01-501-050 RETIREMENT	39,677	39,677	3,006.13	16,687.47	13,737.56	0.00	42.06	22,989.61
01-501-060 WORKERS' COMPENSATION	550	550	45.83	320.81	229.15	0.00	58.33	229.19
01-501-070 UNEMPLOYMENT COMPENSATION	675	675	58.15	621.37	500.22	0.00	92.05	53.63
01-501-080 CONTRACT LABOR	10,000	10,000	0.00	0.00	4,835.60	0.00	0.00	10,000.00
01-501-095 TERMINATION PAY-OUT	0	0	0.00	0.00	0.00	0.00	0.00	0.00
TOTAL SALARIES & BENEFITS	398,463	398,463	28,123.36	170,786.02	145,233.15	0.00	42.86	227,676.70
OTHER EXPENSES								
01-501-120 DUES & SUBSCRIPTIONS	2,500	2,500	0.00	2,074.27	1,351.44	0.00	82.97	425.73
01-501-130 BONDS & TRAINING	10,000	10,000	0.00	2,822.16	3,964.44	0.00	28.22	7,177.84
01-501-151 Contract Svc - Inspections	0	0	0.00	0.00	0.00	0.00	0.00	0.00
01-501-420 OFFICE SUPPLIES	3,500	3,500	42.89	765.25	870.99	0.00	21.86	2,734.75
01-501-431 EMPLOYEE APPRECIATION LUNCHE	0	0	0.00	(1,659.97)	112.04	0.00	0.00	1,659.97
01-501-440 ELECTION SUPPLIES	15,000	15,000	0.00	7,305.51	0.00	0.00	48.70	7,694.49
01-501-441 ELECTION SECURITY	3,000	3,000	0.00	8,355.00	1,650.00	0.00	278.50	(5,355.00)
01-501-590 POSTAGE	500	500	0.00	179.17	16.64	0.00	35.83	320.83
01-501-600 OFFICE EQUIPMENT & MAINT	0	0	0.00	0.00	0.00	0.00	0.00	0.00
TOTAL OTHER EXPENSES	34,500	34,500	42.89	19,841.39	7,965.55	0.00	57.51	14,658.61
CAPITAL EXPENSES								
01-501-800 CAPITAL EXPENDITURES	0	0	0.00	0.00	0.00	0.00	0.00	0.00
TOTAL CAPITAL EXPENSES	0	0	0.00	0.00	0.00	0.00	0.00	0.00
OTHER INCOME/EXPENSES								
01-501-900 UNALLOCATED FUNDS	0	0	0.00	0.00	0.00	0.00	0.00	0.00
TOTAL OTHER INCOME/EXPENSES	0	0	0.00	0.00	0.00	0.00	0.00	0.00
TOTAL 01-ADMINISTRATION	432,963	432,963	28,166.25	190,627.41	153,198.70	0.00	44.03	242,335.31

REVENUE & EXPENSE REPORT (UNAUDITED)
AS OF: MARCH 31ST, 2025

01 -GENERAL FUND

% OF YEAR COMPLETED: 50.00

DEPARTMENTAL EXPENDITURES	ORIGINAL BUDGET	AMENDED BUDGET	CURRENT PERIOD	YEAR TO DATE BALANCE	PRIOR YEAR YTD BALANCE	TOTAL ENCUMBERED	% OF BUDGET	BUDGET BALANCE
02-POLICE DEPARTMENT								
SALARIES & BENEFITS								
01-502-010 POLICE SALARIES	1,447,515	1,447,515	89,103.46	583,782.31	701,782.09	0.00	40.33	863,732.69
01-502-012 CIVILIAN SALARIES	278,624	278,624	10,993.89	78,458.06	63,711.46	0.00	28.16	200,165.94
01-502-014 POLICE SPECIAL ASSIGNMENT SA	4,500	4,500	346.16	1,384.64	2,076.96	0.00	30.77	3,115.36
01-502-015 POL INCENTIVE PAY-BILING & S	1,200	1,200	179.45	1,237.10	1,858.50	0.00	103.09	(37.10)
01-502-016 CIV.INCENTIVE PAY-BILING & S	0	0	27.09	129.66	228.29	0.00	0.00	(129.66)
01-502-017 POLICE SALARIES-CERTIFICATIO	12,000	12,000	969.26	6,923.34	8,469.79	0.00	57.69	5,076.66
01-502-018 POLICE EDUCATION PAY	3,900	3,900	530.84	3,138.88	1,904.10	0.00	80.48	761.12
01-502-020 POLICE OVERTIME	125,186	125,186	3,239.71	41,448.01	31,579.40	0.00	33.11	83,737.66
01-502-021 7K HOURS	82,665	82,665	3,240.06	22,465.73	24,872.51	0.00	27.18	60,198.96
01-502-022 CIVILIAN OVERTIME	30,000	30,000	352.59	15,155.92	8,127.42	0.00	50.52	14,844.08
01-502-025 STIPEND (CIVILIAN & POLICE)	0	0	0.00	0.00	0.00	0.00	0.00	0.00
01-502-026 HAZARDOUS DUTY PAY	11,760	11,760	318.51	2,266.43	4,066.21	0.00	19.27	9,493.57
01-502-030 SOCIAL SECURITY	132,972	132,972	7,512.50	50,606.85	58,216.41	0.00	38.06	82,365.58
01-502-030CSOCIAL SECURITY CIVILIAN	17,490	17,490	856.86	7,106.15	4,964.41	0.00	40.63	10,384.18
01-502-040 HEALTH INSURANCE	332,377	332,377	17,940.91	112,822.15	114,473.04	0.00	33.94	219,554.85
01-502-050 RETIREMENT	262,006	262,006	15,055.66	100,086.79	111,801.75	0.00	38.20	161,919.28
01-502-050CRETIREMENT CIVILIAN	34,448	34,448	1,794.58	14,235.78	9,283.26	0.00	41.33	20,212.18
01-502-060 WORKERS' COMPENSATION	80,330	80,330	6,676.41	46,797.91	31,425.33	0.00	58.26	33,531.93
01-502-070 UNEMPLOYMENT COMPENSATION	3,780	3,780	110.72	2,829.87	2,855.54	0.00	74.86	950.13
TOTAL SALARIES & BENEFITS	2,860,753	2,860,753	159,248.66	1,090,875.58	1,181,696.47	0.00	38.13	1,769,877.41
OTHER EXPENSES								
01-502-120 DUES & SUBSCRIPTIONS	10,000	10,000	147.40	2,154.18	5,036.73	0.00	21.54	7,845.82
01-502-130 BONDS & TRAINING	17,000	17,000	0.00	6,850.32	5,809.74	0.00	40.30	10,149.68
01-502-400 CITIZEN'S PATROL	2,500	2,500	0.00	810.00	0.00	0.00	32.40	1,690.00
01-502-420 OFFICE SUPPLIES	20,000	20,000	375.00	3,715.04	4,038.59	0.00	18.58	16,284.96
01-502-430 MISCELLANEOUS SUPPLIES	0	0	0.00	0.00	0.00	0.00	0.00	0.00
01-502-431 EMPLOYEE APPRECIATION LUNCHE	1,000	1,000	0.00	587.07	462.48	0.00	58.71	412.93
01-502-433 PD IT SOFTWARE HARDWARE & SU	8,000	8,000	0.00	1,632.00	1,991.34	0.00	20.40	6,368.00
01-502-435 K-9 PROGRAM EXPENSES	3,000	3,000	1,885.85	9,618.73	1,435.91	0.00	320.62	(6,618.73)
01-502-450 LAB FEES/CRIME SCENE SUPP	10,000	10,000	670.23	849.71	979.16	0.00	8.50	9,150.29
01-502-480 UNIFORM ALLOWANCE	35,000	35,000	1,740.00	14,175.65	15,421.63	0.00	40.50	20,824.35
01-502-485 WEAPONS & AMMUNITION	14,000	14,000	0.00	1,069.00	1,588.35	0.00	7.64	12,931.00
01-502-486 PERSONAL PROTECTIVE EQUIPMEN	22,000	22,000	0.00	7,229.34	518.75	0.00	32.86	14,770.66
01-502-487 VEHICLE EQUIPMENT	0	0	0.00	0.00	15,400.81	0.00	0.00	0.00
01-502-489 COMMUNITY SERVICES	7,000	7,000	0.00	2,499.72	1,157.95	0.00	35.71	4,500.28
01-502-491 MEMORIAL SERVICES	5,000	5,000	0.00	0.00	0.00	0.00	0.00	5,000.00
01-502-501 MISC. CRIME PREVENTION	1,000	1,000	0.00	0.00	0.00	0.00	0.00	1,000.00
01-502-520 BICYCLE PARTS & MAINTENANCE	2,000	2,000	0.00	0.00	0.00	0.00	0.00	2,000.00
01-502-540 VEHICLE FUEL	65,000	65,000	0.00	22,357.06	48,411.81	0.00	34.40	42,642.94
01-502-550 PRISONER EXPENSE	300	300	0.00	0.00	0.00	0.00	0.00	300.00
01-502-590 POSTAGE	3,000	3,000	0.00	419.02	522.93	0.00	13.97	2,580.98
TOTAL OTHER EXPENSES	225,800	225,800	4,818.48	73,966.84	102,776.18	0.00	32.76	151,833.16

REVENUE & EXPENSE REPORT (UNAUDITED)
AS OF: MARCH 31ST, 2025

01 -GENERAL FUND

% OF YEAR COMPLETED: 50.00

DEPARTMENTAL EXPENDITURES	ORIGINAL BUDGET	AMENDED BUDGET	CURRENT PERIOD	YEAR TO DATE BALANCE	PRIOR YEAR YTD BALANCE	TOTAL ENCUMBERED	% OF BUDGET	BUDGET BALANCE
CAPITAL EXPENSES								
01-502-800 CAPITAL EXPENDITURES	0	0	0.00	0.00	0.00	0.00	0.00	0.00
TOTAL CAPITAL EXPENSES	0	0	0.00	0.00	0.00	0.00	0.00	0.00
OTHER INCOME/EXPENSES								
01-502-900 UNALLOCATED FUNDS	0	0	0.00	0.00	0.00	0.00	0.00	0.00
TOTAL OTHER INCOME/EXPENSES	0	0	0.00	0.00	0.00	0.00	0.00	0.00
TOTAL 02-POLICE DEPARTMENT	3,086,553	3,086,553	164,067.14	1,164,842.42	1,284,472.65	0.00	37.74	1,921,710.57

REVENUE & EXPENSE REPORT (UNAUDITED)
AS OF: MARCH 31ST, 2025

01 -GENERAL FUND

% OF YEAR COMPLETED: 50.00

DEPARTMENTAL EXPENDITURES	ORIGINAL BUDGET	AMENDED BUDGET	CURRENT PERIOD	YEAR TO DATE BALANCE	PRIOR YEAR YTD BALANCE	TOTAL ENCUMBERED	% OF BUDGET	BUDGET BALANCE
03-FIRE DEPARTMENT								
SALARIES & BENEFITS								
01-503-010 FIRE DEPT. SALARIES	663,955	663,955	52,241.04	313,857.26	304,003.81	0.00	47.27	350,097.48
01-503-012 STIPEND	0	0	0.00	0.00	0.00	0.00	0.00	0.00
01-503-017 FIRE SALARIES-CERTIFICATION	24,000	24,000	830.78	7,326.97	5,884.72	0.00	30.53	16,673.03
01-503-018 FD EDUCATION PAY	3,300	3,300	276.96	1,511.74	1,223.24	0.00	45.81	1,788.26
01-503-020 FIRE OVERTIME	75,000	75,000	5,368.57	38,578.16	32,683.82	0.00	51.44	36,421.84
01-503-021 7K HOURS	105,447	105,447	4,251.79	26,354.66	28,099.51	0.00	24.99	79,092.57
01-503-026 HAZARDOUS DUTY PAY	4,080	4,080	212.32	1,195.59	904.83	0.00	29.30	2,884.41
01-503-030 SOCIAL SECURITY	67,015	67,015	4,765.35	29,597.91	28,142.57	0.00	44.17	37,417.31
01-503-040 HEALTH INSURANCE	154,318	154,318	8,487.73	70,803.28	66,325.33	0.00	45.88	83,514.72
01-503-050 RETIREMENT	129,826	129,826	11,400.55	60,579.17	53,268.51	0.00	46.66	69,246.39
01-503-060 WORKERS' COMPENSATION	52,701	52,701	5,478.12	38,346.84	28,230.56	0.00	72.76	14,354.28
01-503-070 UNEMPLOYMENT COMPENSATION	1,755	1,755	129.79	1,586.58	1,461.24	0.00	90.40	168.42
01-503-080 VOLUNTEER PENSION FUND	11,000	11,000	0.00	0.00	6,120.00	0.00	0.00	11,000.00
01-503-095 TERMINATION PAY-OUT	0	0	0.00	0.00	0.00	0.00	0.00	0.00
TOTAL SALARIES & BENEFITS	1,292,397	1,292,397	93,443.00	589,738.16	556,348.14	0.00	45.63	702,658.71
OTHER EXPENSES								
01-503-120 DUES AND SUBSCRIPTIONS	15,000	15,000	0.00	14,838.72	13,725.39	0.00	98.92	161.28
01-503-130 TRAINING	40,000	40,000	225.00	4,046.05	19,687.61	0.00	10.12	35,953.95
01-503-140 EMPLOYMENT SCREENING	11,500	11,500	400.00	600.00	963.68	0.00	5.22	10,900.00
01-503-150 HAZMAT PROGRAM	500	500	0.00	0.00	0.00	0.00	0.00	500.00
01-503-151 OUTSIDE PROF. SERVICES	0	0	0.00	0.00	0.00	0.00	0.00	0.00
01-503-221 MOBILE DATA TERMINAL SERVICE	2,000	2,000	0.00	1,795.00	1,148.00	0.00	89.75	205.00
01-503-227 RADIO CONTRACT	6,000	6,000	671.67	4,030.02	5,655.69	0.00	67.17	1,969.98
01-503-229 RADIO MAINTENANCE	8,500	8,500	0.00	0.00	0.00	0.00	0.00	8,500.00
01-503-396 EOC EQUIPMENT & SUPPLIES	7,000	7,000	3,323.52	6,423.11	5,427.31	0.00	91.76	576.89
01-503-420 OFFICE SUPPLIES	10,000	10,000	616.32	1,222.85	3,869.57	0.00	12.23	8,777.15
01-503-430 SUPPLIES & EQUIPMENT	35,500	35,500	505.74	18,001.92	11,552.88	4,992.00	64.77	12,506.08
01-503-431 EMPLOYEE APPRECIATION LUNCHE	2,000	2,000	0.00	816.70	2,114.82	0.00	40.84	1,183.30
01-503-432 PR/FIRE PREVENTION	15,000	15,000	5,547.96	5,667.91	1,265.50	0.00	37.79	9,332.09
01-503-450 MEDICAL SUPPLIES	25,000	25,000	2,547.24	13,691.44	7,716.18	0.00	54.77	11,308.56
01-503-460 MEDICAL TRAINING	17,500	17,500	0.00	8,244.59	550.99	0.00	47.11	9,255.41
01-503-480 UNIFORM ALLOWANCE	24,000	24,000	539.11	11,724.85	16,689.60	809.97	52.23	11,465.18
01-503-503 VEHICLE PARTS - FIRE	22,000	22,000	0.00	9,737.19	10,907.13	186.51	45.11	12,076.30
01-503-540 VEHICLE FUEL	16,800	16,800	0.00	11,957.13	12,191.16	0.00	71.17	4,842.87
01-503-590 POSTAGE	1,000	1,000	0.00	49.06	367.45	0.00	4.91	950.94
01-503-603 VEHICLE OUTSIDE MAINT. FIRE	50,000	50,000	0.00	41,348.40	31,307.78	73.96	82.84	8,577.64
01-503-620 DORM - UTILITIES & CABLE	12,000	12,000	459.32	2,236.41	4,767.39	0.00	18.64	9,763.59
01-503-630 DORM - REPAIRS & MAINT	0	0	0.00	0.00	0.00	0.00	0.00	0.00
01-503-700 CONTINGENCIES	0	0	0.00	0.00	0.00	0.00	0.00	0.00
01-503-710 TRAVEL	18,500	18,500	1,840.00	12,259.42	13,829.26	0.00	66.27	6,240.58
01-503-730 ANNUAL PUMP TESTS	2,500	2,500	0.00	2,441.13	495.00	0.00	97.65	58.87
01-503-740 MAINTENANCE CONTRACTS	5,000	5,000	2,913.48	3,739.60	0.00	0.00	74.79	1,260.40
01-503-741 EMS MEDICAL DIRECTION	0	0	0.00	0.00	0.00	0.00	0.00	0.00
01-503-750 SCBA TESTS	4,000	4,000	0.00	2,812.60	827.35	343.85	78.91	843.55
01-503-760 LADDER TESTS	3,000	3,000	2,813.87	2,813.87	0.00	0.00	93.80	186.13
TOTAL OTHER EXPENSES	354,300	354,300	22,403.23	180,497.97	165,059.74	6,406.29	52.75	167,395.74

REVENUE & EXPENSE REPORT (UNAUDITED)
AS OF: MARCH 31ST, 2025

01 -GENERAL FUND

% OF YEAR COMPLETED: 50.00

DEPARTMENTAL EXPENDITURES	ORIGINAL BUDGET	AMENDED BUDGET	CURRENT PERIOD	YEAR TO DATE BALANCE	PRIOR YEAR YTD BALANCE	TOTAL ENCUMBERED	% OF BUDGET	BUDGET BALANCE
CAPITAL EXPENSES								
01-503-800 CAPITAL EXPENDITURES	0	0	0.00	0.00	0.00	0.00	0.00	0.00
01-503-801 CAPITAL EQUIPMENT	0	0	0.00	0.00	0.00	0.00	0.00	0.00
01-503-802 CAPITAL FACILITIES	0	0	0.00	0.00	0.00	0.00	0.00	0.00
01-503-803 CAPITAL FLEET	0	0	0.00	0.00	0.00	0.00	0.00	0.00
01-503-804 CAPITAL PPE(PERS. PROTECT.EQ	0	0	0.00	0.00	0.00	0.00	0.00	0.00
TOTAL CAPITAL EXPENSES	0	0	0.00	0.00	0.00	0.00	0.00	0.00
OTHER INCOME/EXPENSES								
01-503-900 UNALLOCATED FUNDS	0	0	0.00	0.00	0.00	0.00	0.00	0.00
01-503-901 TRANSFER TO FUND 22	0	0	0.00	0.00	0.00	0.00	0.00	0.00
TOTAL OTHER INCOME/EXPENSES	0	0	0.00	0.00	0.00	0.00	0.00	0.00
TOTAL 03-FIRE DEPARTMENT	1,646,697	1,646,697	115,846.23	770,236.13	721,407.88	6,406.29	47.16	870,054.45

REVENUE & EXPENSE REPORT (UNAUDITED)
AS OF: MARCH 31ST, 2025

01 -GENERAL FUND

% OF YEAR COMPLETED: 50.00

DEPARTMENTAL EXPENDITURES	ORIGINAL BUDGET	AMENDED BUDGET	CURRENT PERIOD	YEAR TO DATE BALANCE	PRIOR YEAR YTD BALANCE	TOTAL ENCUMBERED	% OF BUDGET	BUDGET BALANCE
04-SPECIAL SERVICES								
SALARIES & BENEFITS								
01-504-009 SALARIES	41,935	41,935	5,095.12	17,232.00	0.00	0.00	41.09	24,703.00
01-504-010 SALARIES - MAYOR & COUNCIL	14,400	14,400	1,080.00	5,400.00	5,289.18	0.00	37.50	9,000.00
01-504-020 OVERTIME	3,000	3,000	464.09	1,007.18	0.00	0.00	33.57	1,992.82
01-504-030 SOCIAL SECURITY	4,539	4,539	503.65	1,795.62	413.10	0.00	39.56	2,743.38
01-504-040 HEALTH INSURANCE	13,059	13,059	0.00	1,788.40	0.00	0.00	13.69	11,270.80
01-504-050 RETIREMENT	6,659	6,659	895.99	2,802.38	0.00	0.00	42.08	3,856.62
01-504-060 WORKERS COMPENSATION	850	850	70.83	495.81	354.15	0.00	58.33	354.19
01-504-070 UNEMPLOYMENT COMP	500	500	71.55	252.73	74.97	0.00	50.55	247.27
01-504-080 CONTRACT LABOR	0	0	0.00	0.00	0.00	0.00	0.00	0.00
01-504-095 TERMINATION PAY-OUT	0	0	0.00	0.00	0.00	0.00	0.00	0.00
TOTAL SALARIES & BENEFITS	84,942	84,942	8,181.23	30,774.12	6,131.40	0.00	36.23	54,168.08
OTHER EXPENSES								
01-504-120 DUES & SUBSCRIPTIONS	2,000	2,000	0.00	83.65	487.43	0.00	4.18	1,916.35
01-504-140 EMPLOYEE APPRECIATION FUND	0	0	0.00	137.14	0.00	0.00	0.00	(137.14)
01-504-420 OFFICE SUPPLIES	1,000	1,000	0.00	27.75	0.00	0.00	2.78	972.25
01-504-440 ELECTION SUPPLIES/EXPENSES	0	0	0.00	0.00	0.00	0.00	0.00	0.00
01-504-460 SPECIAL EVENTS	35,000	35,000	2,628.01	23,075.96	28,290.89	0.00	65.93	11,924.04
01-504-461 ARTVIBE EVENT	0	0	0.00	0.00	0.00	0.00	0.00	0.00
01-504-465 JULY 4TH EVENT	10,000	10,000	0.00	0.00	0.00	0.00	0.00	10,000.00
01-504-470 LIGHT UP	75,000	75,000	0.00	78,159.20	69,824.68	0.00	104.21	(3,159.20)
01-504-471 911 REMEMBRBANCE RACE	3,200	3,200	0.00	0.00	0.00	0.00	0.00	3,200.00
01-504-590 POSTAGE	2,000	2,000	910.26	1,019.05	0.00	0.00	50.95	980.95
01-504-610 NEWSLETTER	17,000	17,000	1,968.00	11,801.44	12,693.58	0.00	69.42	5,198.56
01-504-630 LEGAL ADVERTISING	16,000	16,000	1,122.26	2,519.15	1,484.51	0.00	15.74	13,480.85
01-504-635 ADVERTISING	5,000	5,000	0.00	1,783.84	883.31	0.00	35.68	3,216.16
01-504-645 MAYOR - COUNCIL EXPENSES	1,500	1,500	0.00	0.00	1,004.85	0.00	0.00	1,500.00
01-504-650 MILEAGE & ENTERTAIMNENT EXPE	0	0	0.00	0.00	0.00	0.00	0.00	0.00
01-504-651 MAYOR EXPENSE	2,000	2,000	0.00	784.18	247.36	0.00	39.21	1,215.82
01-504-652 PLACE 1- COUNCIL EXPENSE	1,500	1,500	0.00	1,248.03	1,504.38	0.00	83.20	251.97
01-504-653 PLACE 2 - COUNCIL EXPENSE	1,500	1,500	0.00	1,412.62	360.00	0.00	94.17	87.38
01-504-654 PLACE 3 - COUNCIL EXPENSE	1,500	1,500	0.00	545.00	0.00	0.00	36.33	955.00
01-504-655 PLACE 4 - COUNCIL EXPENSE	1,500	1,500	0.00	45.00	0.00	0.00	3.00	1,455.00
01-504-656 PLACE 5 - COUNCIL EXPENSE	1,500	1,500	0.00	892.44	710.00	0.00	59.50	607.56
TOTAL OTHER EXPENSES	177,200	177,200	6,628.53	123,534.45	117,490.99	0.00	69.71	53,665.55
CAPITAL EXPENSES								
01-504-800 CAPITAL EXPENDITURES	0	0	0.00	0.00	0.00	0.00	0.00	0.00
TOTAL CAPITAL EXPENSES	0	0	0.00	0.00	0.00	0.00	0.00	0.00
OTHER INCOME/EXPENSES								
01-504-900 UNALLOCATED FUNDS	0	0	0.00	0.00	0.00	0.00	0.00	0.00
TOTAL OTHER INCOME/EXPENSES	0	0	0.00	0.00	0.00	0.00	0.00	0.00
TOTAL 04-SPECIAL SERVICES	262,142	262,142	14,809.76	154,308.57	123,622.39	0.00	58.86	107,833.63

REVENUE & EXPENSE REPORT (UNAUDITED)
AS OF: MARCH 31ST, 2025

01 -GENERAL FUND

% OF YEAR COMPLETED: 50.00

DEPARTMENTAL EXPENDITURES	ORIGINAL BUDGET	AMENDED BUDGET	CURRENT PERIOD	YEAR TO DATE BALANCE	PRIOR YEAR YTD BALANCE	TOTAL ENCUMBERED	% OF BUDGET	BUDGET BALANCE
06-PARKS & RECREATION								
OTHER EXPENSES								
01-506-100 UTILITIES	27,964	27,964	340.58	(82.50)	5,411.10	0.00	0.30-	28,046.82
01-506-120 DUES & SUBSCIPTIONS	3,050	3,050	0.00	0.00	0.00	0.00	0.00	3,050.00
01-506-130 TRAINING	2,500	2,500	0.00	290.00	0.00	0.00	11.60	2,210.00
01-506-240 CONTRACT MAINTENANCE OUTS	10,000	10,000	250.00	1,600.00	1,500.00	0.00	16.00	8,400.00
01-506-250 CONTRACT MAINT.-GREEN BEL	65,000	65,000	18,849.05	42,168.41	44,848.11	9,049.40	78.80	13,782.19
01-506-260 GREEN BELT CLEANING	5,000	5,000	0.00	0.00	3,648.48	0.00	0.00	5,000.00
01-506-430 SUPPLIES	9,000	9,000	1,444.27	2,691.52	2,285.79	0.00	29.91	6,308.48
01-506-431 EMPLOYEE APPRECIATION LUNCHE	0	0	0.00	0.00	0.00	0.00	0.00	0.00
01-506-460 SPECIAL EVENTS	21,000	21,000	0.00	2,282.62	3,284.68	0.00	10.87	18,717.38
01-506-520 EQUIPMENT REPAIR	12,000	12,000	5,136.59	5,438.30	1,636.58	173.20	46.76	6,388.50
01-506-630 FACILITY MAINTENANCE	30,000	30,000	0.00	1,048.35	19,096.49	0.00	3.49	28,951.65
01-506-631 POND MAINTENANCE	25,000	25,000	2,156.00	5,729.00	5,438.00	0.00	22.92	19,271.00
01-506-635 TREES / SHRUBS/LANDSCAPING	30,000	30,000	0.00	3,149.47	1,308.64	0.00	10.50	26,850.53
01-506-640 LITTLE LEAGUE (FACILITIES)	4,000	4,000	0.00	1,267.80	231.00	0.00	31.70	2,732.20
01-506-701 LEASE PURCHASE PRINCIPAL	0	0	0.00	0.00	0.00	0.00	0.00	0.00
01-506-702 LEASE PURCHASE INTEREST	0	0	0.00	0.00	0.00	0.00	0.00	0.00
TOTAL OTHER EXPENSES	244,514	244,514	28,176.49	65,582.97	88,688.87	9,222.60	30.59	169,708.75
CAPITAL EXPENSES								
01-506-800 CAPITAL EXPENDITURE	0	0	0.00	0.00	0.00	0.00	0.00	0.00
01-506-810 CAPITAL IMPROVEMENTS	0	0	0.00	0.00	0.00	0.00	0.00	0.00
01-506-819 PARKS LIGHTS PRINCIPAL	0	0	0.00	0.00	0.00	0.00	0.00	0.00
01-506-820 PARKS LIGHTS PROJECT	0	0	0.00	0.00	0.00	0.00	0.00	0.00
01-506-892 INTEREST	0	0	0.00	0.00	0.00	0.00	0.00	0.00
TOTAL CAPITAL EXPENSES	0	0	0.00	0.00	0.00	0.00	0.00	0.00
OTHER INCOME/EXPENSES								
01-506-900 UNALLOCATED FUNDS	0	0	0.00	0.00	0.00	0.00	0.00	0.00
TOTAL OTHER INCOME/EXPENSES	0	0	0.00	0.00	0.00	0.00	0.00	0.00
TOTAL 06-PARKS & RECREATION	244,514	244,514	28,176.49	65,582.97	88,688.87	9,222.60	30.59	169,708.75

REVENUE & EXPENSE REPORT (UNAUDITED)
AS OF: MARCH 31ST, 2025

01 -GENERAL FUND

% OF YEAR COMPLETED: 50.00

DEPARTMENTAL EXPENDITURES	ORIGINAL BUDGET	AMENDED BUDGET	CURRENT PERIOD	YEAR TO DATE BALANCE	PRIOR YEAR YTD BALANCE	TOTAL ENCUMBERED	% OF BUDGET	BUDGET BALANCE
07-FLEET MECHANIC								
SALARIES & BENEFITS								
01-507-010 MECHANIC SALARIES	52,118	52,118	3,931.20	21,805.99	23,251.60	0.00	41.84	30,311.89
01-507-012 STIPEND	0	0	0.00	0.00	0.00	0.00	0.00	0.00
01-507-020 OVERTIME	2,000	2,000	186.86	1,283.84	927.18	0.00	64.19	716.16
01-507-030 SOCIAL SECURITY	4,140	4,140	315.03	1,766.36	1,849.67	0.00	42.67	2,373.66
01-507-040 HEALTH INSURANCE	11,872	11,872	941.69	5,923.18	5,533.68	0.00	49.89	5,948.32
01-507-050 RETIREMENT	8,020	8,020	676.06	3,523.26	3,448.33	0.00	43.93	4,497.01
01-507-060 WORKERS' COMPENSATION	1,990	1,990	165.83	1,160.81	829.15	0.00	58.33	829.19
01-507-070 UNEMPLOYMENT COMPENSATION	135	135	5.85	117.00	111.65	0.00	86.67	18.00
01-507-090 TERMINATION PAY-OUT	0	0	0.00	0.00	0.00	0.00	0.00	0.00
TOTAL SALARIES & BENEFITS	80,275	80,275	6,222.52	35,580.44	35,951.26	0.00	44.32	44,694.23
OTHER EXPENSES								
01-507-120 DUES & SUBSCRIPTIONS	0	0	0.00	0.00	0.00	0.00	0.00	0.00
01-507-130 TRAINING	1,000	1,000	0.00	0.00	0.00	0.00	0.00	1,000.00
01-507-420 OFFICE SUPPLIES	750	750	0.00	0.00	0.00	0.00	0.00	750.00
01-507-430 FLEET TOOLS & SUPPLIES	15,000	15,000	644.05	4,151.65	3,803.29	612.29	31.76	10,236.06
01-507-450 ENVIRONMENTAL FEES	2,000	2,000	0.00	434.69	362.00	0.00	21.73	1,565.31
01-507-480 UNIFORM ALLOWANCE	400	400	278.43	278.43	144.00	0.00	69.61	121.57
01-507-501 VEHICLE PARTS-ADMIN	0	0	0.00	631.20	0.00	0.00	0.00	(631.20)
01-507-502 VEHICLE PARTS-POLICE	15,000	15,000	9,059.35	15,453.11	12,066.37	310.43	105.09	(763.54)
01-507-503 VEHICLE PARTS-FIRE	2,500	2,500	222.53	222.53	249.46	0.00	8.90	2,277.47
01-507-506 VEHICLE PARTS-PARKS & REC	2,000	2,000	0.00	236.69	0.00	29.98	13.33	1,733.33
01-507-508 VEHICLE PARTS-WARRANT OFFICE	0	0	0.00	0.00	0.00	0.00	0.00	0.00
01-507-516 VEHICLE PARTS-PUBLIC WORKS	15,000	15,000	291.84	3,532.04	3,243.66	1,963.42	36.64	9,504.54
01-507-519 VEHICLE PARTS-INSPECTION	750	750	0.00	(677.46)	124.32	0.00	90.33-	1,427.46
01-507-520 EQUIPMENT REPAIR	30,000	30,000	0.00	39,203.25	11,573.88	0.00	130.68	(9,203.25)
01-507-540 VEHICLE FUEL	25,000	25,000	419.95	13,329.28	10,215.66	0.00	53.32	11,670.72
01-507-602 VEHICLE OUTSIDE MAINT-POLICE	30,000	30,000	3,467.22	30,089.35	14,690.64	0.00	100.30	(89.35)
01-507-603 VEHICLE OUTSIDE MAINT-FIRE	2,000	2,000	1,610.14	2,646.15	761.98	0.00	132.31	(646.15)
01-507-606 VEHICLE OUTSIDE MAINT-PARKS&	2,000	2,000	0.00	157.00	0.00	0.00	7.85	1,843.00
01-507-608 VEHICLE OUTSIDE MAINT-WRNT O	0	0	0.00	0.00	0.00	0.00	0.00	0.00
01-507-616 VEHICLE OUTSIDE MAINT-PW	18,000	18,000	1,360.16	18,688.69	8,835.80	0.00	103.83	(688.69)
01-507-700 CONTINGENCIES	0	0	0.00	0.00	0.00	0.00	0.00	0.00
01-507-730 VEHICLE/EQUIPMENT TESTING	1,000	1,000	0.00	0.00	0.00	0.00	0.00	1,000.00
TOTAL OTHER EXPENSES	162,400	162,400	17,353.67	128,376.60	66,071.06	2,916.12	80.85	31,107.28
CAPITAL EXPENSES								
01-507-800 CAPITAL EXPENDITURES	0	0	0.00	0.00	0.00	0.00	0.00	0.00
TOTAL CAPITAL EXPENSES	0	0	0.00	0.00	0.00	0.00	0.00	0.00
OTHER INCOME/EXPENSES								
01-507-900 UNALLOCATED FUNDS	0	0	0.00	0.00	0.00	0.00	0.00	0.00
TOTAL OTHER INCOME/EXPENSES	0	0	0.00	0.00	0.00	0.00	0.00	0.00
TOTAL 07-FLEET MECHANIC	242,675	242,675	23,576.19	163,957.04	102,022.32	2,916.12	68.76	75,801.51

REVENUE & EXPENSE REPORT (UNAUDITED)
AS OF: MARCH 31ST, 2025

01 -GENERAL FUND

% OF YEAR COMPLETED: 50.00

DEPARTMENTAL EXPENDITURES	ORIGINAL BUDGET	AMENDED BUDGET	CURRENT PERIOD	YEAR TO DATE BALANCE	PRIOR YEAR YTD BALANCE	TOTAL ENCUMBERED	% OF BUDGET	BUDGET BALANCE
08-COURT								
========								
SALARIES & BENEFITS								
01-508-010 COURT SALARIES	330,639	330,639	21,810.92	132,894.15	127,809.84	0.00	40.19	197,744.92
01-508-012 STIPEND	0	0	0.00	0.00	0.00	0.00	0.00	0.00
01-508-013 WARRANTS ON CALL	0	0	0.00	0.00	0.00	0.00	0.00	0.00
01-508-015 COURT INCENTIVE PAY-BILINGUA	600	600	46.16	276.96	276.96	0.00	46.16	323.04
01-508-017 CERTIFICATION PAY - COURT	0	0	0.00	0.00	0.00	0.00	0.00	0.00
01-508-018 COURT EDUCATION PAY	600	600	0.00	0.00	230.80	0.00	0.00	600.00
01-508-020 COURT OVERTIME	10,000	10,000	300.20	2,127.08	1,885.41	0.00	21.27	7,872.92
01-508-021 7K HOURS	0	0	0.00	0.00	0.00	0.00	0.00	0.00
01-508-026 HAZARDOUS DUTY PAY	0	0	0.00	0.00	0.00	0.00	0.00	0.00
01-508-030 SOCIAL SECURITY	26,151	26,151	1,694.04	10,437.51	10,116.59	0.00	39.91	15,713.18
01-508-040 HEALTH INSURANCE	47,484	47,484	3,770.55	26,984.68	27,200.72	0.00	56.83	20,499.32
01-508-050 RETIREMENT	32,059	32,059	3,153.74	17,036.22	14,739.05	0.00	53.14	15,022.80
01-508-060 WORKER'S COMPENSATION	1,138	1,138	94.83	663.81	672.37	0.00	58.33	474.19
01-508-070 UNEMPLOYMENT COMPENSATION	1,080	1,080	97.21	603.91	505.49	0.00	55.92	476.09
01-508-095 TERMINATION PAY-OUT	0	0	0.00	0.00	0.00	0.00	0.00	0.00
TOTAL SALARIES & BENEFITS	449,751	449,751	30,967.65	191,024.32	183,437.23	0.00	42.47	258,726.46
OTHER EXPENSES								
01-508-120 DUES & SUBSCRIPTIONS	1,000	1,000	0.00	110.00	189.75	0.00	11.00	890.00
01-508-130 BONDS & TRAINING	7,500	7,500	0.00	3,389.80	2,178.97	0.00	45.20	4,110.20
01-508-150 JUDGE ALTERNATE	7,750	7,750	500.00	1,711.56	2,076.96	0.00	22.08	6,038.44
01-508-160 PROSECUTOR	1,000	1,000	0.00	0.00	0.00	0.00	0.00	1,000.00
01-508-165 WARRANT JAIL COSTS	5,000	5,000	0.00	0.00	0.00	0.00	0.00	5,000.00
01-508-166 CONTRACT-WARRANT OFFICER	70,000	70,000	11,600.00	61,950.00	65,300.00	0.00	88.50	8,050.00
01-508-170 JURY SERVICE FEES	1,000	1,000	0.00	0.00	36.00	0.00	0.00	1,000.00
01-508-180 COURT OF RECORD/STENOGRAPHER	500	500	0.00	0.00	1,177.81	0.00	0.00	500.00
01-508-420 OFFICE SUPPLIES	9,500	9,500	214.48	3,312.65	3,941.26	775.00	43.03	5,412.35
01-508-431 EMPLOYEE APPRECIATION LUNCHE	300	300	0.00	0.00	0.00	0.00	0.00	300.00
01-508-480 UNIFORM ALLOWANCE	0	0	0.00	0.00	0.00	0.00	0.00	0.00
01-508-590 POSTAGE	5,000	5,000	0.00	212.40	581.60	0.00	4.25	4,787.60
TOTAL OTHER EXPENSES	108,550	108,550	12,314.48	70,686.41	75,482.35	775.00	65.83	37,088.59
CAPITAL EXPENSES								
01-508-800 CAPITAL EXPENDITURES	0	0	0.00	0.00	0.00	0.00	0.00	0.00
01-508-810 TRANSFER TO COURT SEC. FUND	0	0	0.00	0.00	0.00	0.00	0.00	0.00
TOTAL CAPITAL EXPENSES	0	0	0.00	0.00	0.00	0.00	0.00	0.00
OTHER INCOME/EXPENSES								
01-508-900 UNALLOCATED FUNDS	0	0	0.00	0.00	0.00	0.00	0.00	0.00
TOTAL OTHER INCOME/EXPENSES	0	0	0.00	0.00	0.00	0.00	0.00	0.00
TOTAL 08-COURT	558,301	558,301	43,282.13	261,710.73	258,919.58	775.00	47.02	295,815.05

REVENUE & EXPENSE REPORT (UNAUDITED)
AS OF: MARCH 31ST, 2025

01 -GENERAL FUND

% OF YEAR COMPLETED: 50.00

DEPARTMENTAL EXPENDITURES	ORIGINAL BUDGET	AMENDED BUDGET	CURRENT PERIOD	YEAR TO DATE BALANCE	PRIOR YEAR YTD BALANCE	TOTAL ENCUMBERED	% OF BUDGET	BUDGET BALANCE
10-FACILITY DIVISION								
OTHER EXPENSES								
01-510-100 UTILITIES	75,000	75,000	5,806.23	22,584.91	27,409.27	0.00	30.11	52,415.09
01-510-170 JANITORIAL SERVICES	30,000	30,000	2,300.00	13,945.00	13,248.00	0.00	46.48	16,055.00
01-510-240 CONTRACT MAINTENANCE	5,000	5,000	0.00	317.18	285.00	0.00	6.34	4,682.82
01-510-430 SUPPLIES	10,000	10,000	1,136.06	2,595.84	1,801.36	139.28	27.35	7,264.88
01-510-630 FACILITY MAINTENANCE	40,000	40,000	2,865.12	12,022.42	12,370.09	0.00	30.06	27,977.58
01-510-631 DORM MAINT 421 DALECREST	10,000	10,000	122.99	5,438.39	3,851.74	0.00	54.38	4,561.61
01-510-632 DORM MAINT 461 GOLFCREST	10,000	10,000	0.00	3,450.55	868.98	0.00	34.51	6,549.45
01-510-650 FIRE ALARM & EXT. INSPECTION	3,000	3,000	0.00	0.00	0.00	0.00	0.00	3,000.00
01-510-700 CONTINGENCIES	0	0	0.00	0.00	0.00	0.00	0.00	0.00
TOTAL OTHER EXPENSES	183,000	183,000	12,230.40	60,354.29	59,834.44	139.28	33.06	122,506.43
CAPITAL EXPENSES								
01-510-800 CAPITAL EXPENDITURES	0	0	0.00	0.00	0.00	0.00	0.00	0.00
TOTAL CAPITAL EXPENSES	0	0	0.00	0.00	0.00	0.00	0.00	0.00
OTHER INCOME/EXPENSES								
01-510-900 UNALLOCATED FUNDS	0	0	0.00	0.00	0.00	0.00	0.00	0.00
TOTAL OTHER INCOME/EXPENSES	0	0	0.00	0.00	0.00	0.00	0.00	0.00
TOTAL 10-FACILITY DIVISION	183,000	183,000	12,230.40	60,354.29	59,834.44	139.28	33.06	122,506.43

REVENUE & EXPENSE REPORT (UNAUDITED)
AS OF: MARCH 31ST, 2025

01 -GENERAL FUND

% OF YEAR COMPLETED: 50.00

DEPARTMENTAL EXPENDITURES	ORIGINAL BUDGET	AMENDED BUDGET	CURRENT PERIOD	YEAR TO DATE BALANCE	PRIOR YEAR YTD BALANCE	TOTAL ENCUMBERED	% OF BUDGET	BUDGET BALANCE
11-CIVIC CENTER								
SALARIES & BENEFITS								
01-511-010 CIVIC CENTER SALARIES	134,120	134,120	10,894.22	69,109.61	35,998.97	0.00	51.53	65,010.88
01-511-012 STIPEND	0	0	0.00	0.00	0.00	0.00	0.00	0.00
01-511-017 CERTIFICATION PAY	0	0	0.00	0.00	0.00	0.00	0.00	0.00
01-511-018 CC EDUCATION PAY	0	0	0.00	0.00	0.00	0.00	0.00	0.00
01-511-020 OVERTIME - CIVIC CENTER	9,000	9,000	180.60	2,579.38	4,153.51	0.00	28.66	6,420.62
01-511-030 SOCIAL SECURITY	10,949	10,949	809.15	5,005.14	2,490.78	0.00	45.71	5,943.58
01-511-040 HEALTH INSURANCE	35,580	35,580	4,657.41	24,605.42	11,906.96	0.00	69.16	10,974.58
01-511-050 RETIREMENT	26,513	26,513	1,672.82	9,390.27	4,641.32	0.00	35.42	17,122.80
01-511-060 WORKERS' COMPENSATION	18,998	18,998	1,583.17	11,082.19	7,845.43	0.00	58.33	7,915.42
01-511-070 UNEMPLOYMENT COMPENSATION	405	405	79.06	353.76	319.36	0.00	87.35	51.24
TOTAL SALARIES & BENEFITS	235,565	235,565	19,876.43	122,125.77	67,356.33	0.00	51.84	113,439.12
OTHER EXPENSES								
01-511-100 UTILITIES	40,000	40,000	4,127.61	19,800.92	9,081.79	0.00	49.50	20,199.08
01-511-430 SUPPLIES	15,000	15,000	973.03	3,817.79	4,324.77	0.00	25.45	11,182.21
01-511-630 FACILITY MAINTENANCE	53,000	53,000	4,624.00	29,881.00	27,066.36	5,632.53	67.01	17,486.47
TOTAL OTHER EXPENSES	108,000	108,000	9,724.64	53,499.71	40,472.92	5,632.53	54.75	48,867.76
CAPITAL EXPENSES								
01-511-800 CAPITAL EXPENDITURES	0	0	0.00	0.00	0.00	0.00	0.00	0.00
TOTAL CAPITAL EXPENSES	0	0	0.00	0.00	0.00	0.00	0.00	0.00
OTHER INCOME/EXPENSES								
01-511-900 UNALLOCATED FUNDS	0	0	0.00	0.00	0.00	0.00	0.00	0.00
TOTAL OTHER INCOME/EXPENSES	0	0	0.00	0.00	0.00	0.00	0.00	0.00
TOTAL 11-CIVIC CENTER	343,565	343,565	29,601.07	175,625.48	107,829.25	5,632.53	52.76	162,306.88

REVENUE & EXPENSE REPORT (UNAUDITED)
AS OF: MARCH 31ST, 2025

01 -GENERAL FUND

% OF YEAR COMPLETED: 50.00

DEPARTMENTAL EXPENDITURES	ORIGINAL BUDGET	AMENDED BUDGET	CURRENT PERIOD	YEAR TO DATE BALANCE	PRIOR YEAR YTD BALANCE	TOTAL ENCUMBERED	% OF BUDGET	BUDGET BALANCE
14-CONTRACT SERVICES								
OTHER EXPENSES								
01-514-151 CONTRACT SVC - INSPECTIONS	65,000	65,000	8,890.00	30,367.50	27,568.75	0.00	46.72	34,632.50
01-514-220 FOOD HEALTH OFFICER FEES	15,000	15,000	1,805.00	6,175.00	5,486.25	0.00	41.17	8,825.00
01-514-221 FIRE INSPECTION FEES	0	0	0.00	0.00	0.00	0.00	0.00	0.00
01-514-250 LEGAL & CITY ATTORNEY	95,000	95,000	2,700.00	39,100.00	68,300.00	0.00	41.16	55,900.00
01-514-255 SPECIAL LEGAL FEES	250,000	320,897	7,432.17	258,798.73	200,460.80	0.00	80.65	62,097.84
01-514-260 DUES & FEES-BCAD	19,000	19,000	5,640.00	11,280.00	14,333.00	0.00	59.37	7,720.00
01-514-290 AUDIT	30,000	30,000	24,400.00	24,400.00	23,600.00	0.00	81.33	5,600.00
01-514-300 EMS	131,700	131,700	21,950.00	76,825.00	65,850.00	0.00	58.33	54,875.00
01-514-301 EMS MEDICAL DIRECTION	20,000	20,000	0.00	20,000.00	20,000.00	0.00	100.00	0.00
01-514-310 MUNICIPAL INSURANCE	130,000	139,684	0.00	139,683.54	124,840.98	0.00	100.00	0.00
01-514-320 ENGINEER / ARCHITECT	50,000	50,000	0.00	4,400.00	4,550.00	0.00	8.80	45,600.00
01-514-322 RACIAL PROFILING	10,000	10,000	0.00	9,890.00	9,890.00	0.00	98.90	110.00
01-514-325 SALES TAX COLLECTION SERVICE	60,300	60,300	0.00	48,754.00	65,787.00	0.00	80.85	11,546.00
01-514-326 SALES TAX-MEIA	0	0	0.00	0.00	125,000.00	0.00	0.00	0.00
01-514-360 MOBILITY IMPAIRED TRANSPORT	12,000	12,000	0.00	12,000.00	9,000.00	0.00	100.00	0.00
01-514-400 CREDIT CARD TERMINAL	35,000	35,000	0.00	10,071.34	10,420.83	0.00	28.78	24,928.66
01-514-403 RECORDS MANAGEMENT	75,852	75,852	8,685.00	45,975.35	10,719.68	0.01	60.61	29,877.04
01-514-405 RECORDS STORAGE RENTAL	3,948	3,948	409.00	2,972.40	4,032.20	0.00	75.29	975.60
01-514-410 RECORDS DESTRUCTION	2,172	2,172	0.00	1,105.00	1,758.00	0.00	50.87	1,067.00
TOTAL OTHER EXPENSES	1,004,972	1,085,553	81,911.17	741,797.86	791,597.49	0.01	68.33	343,754.64
CAPITAL EXPENSES								
01-514-800 CAPITAL EXPENDITURES	0	0	0.00	0.00	0.00	0.00	0.00	0.00
TOTAL CAPITAL EXPENSES	0	0	0.00	0.00	0.00	0.00	0.00	0.00
OTHER INCOME/EXPENSES								
01-514-900 UNALLOCATED FUNDS	0	0	0.00	0.00	0.00	0.00	0.00	0.00
TOTAL OTHER INCOME/EXPENSES	0	0	0.00	0.00	0.00	0.00	0.00	0.00
TOTAL 14-CONTRACT SERVICES	1,004,972	1,085,553	81,911.17	741,797.86	791,597.49	0.01	68.33	343,754.64

REVENUE & EXPENSE REPORT (UNAUDITED)
AS OF: MARCH 31ST, 2025

01 -GENERAL FUND

% OF YEAR COMPLETED: 50.00

DEPARTMENTAL EXPENDITURES	ORIGINAL BUDGET	AMENDED BUDGET	CURRENT PERIOD	YEAR TO DATE BALANCE	PRIOR YEAR YTD BALANCE	TOTAL ENCUMBERED	% OF BUDGET	BUDGET BALANCE
15-TECH SUPPORT								
OTHER EXPENSES								
01-515-200 COMPUTER CONTRACTS	105,000	105,000	19,740.21	45,756.19	33,842.47	0.00	43.58	59,243.81
01-515-201 COMPUTER MAINTENANCE	0	0	0.00	0.00	0.00	0.00	0.00	0.00
01-515-205 TELECOMMUNICATIONS CONTRACT	0	0	0.00	0.00	0.00	0.00	0.00	0.00
01-515-210 TELEPHONE MAINT.CONTRACT	0	0	0.00	0.00	0.00	0.00	0.00	0.00
01-515-215 MOBILE PHONES CONTRACT	70,400	70,400	8,360.34	27,370.73	26,973.96	0.00	38.88	43,029.27
01-515-221 MOBILE DATA TERMINAL SERVICE	857	857	(658.27)	768.52	428.70	0.00	89.63	88.88
01-515-286 CONTRACTSERVICES - IT	149,000	149,000	17,532.75	110,476.57	85,883.42	0.00	74.15	38,523.43
01-515-287 CONTRACT SERVICES-IT POLICE	10,000	10,000	320.00	5,301.39	4,602.08	0.00	53.01	4,698.61
01-515-288 CONTRACT SERVICES-IT FIRE	5,000	5,000	0.00	0.00	119.99	0.00	0.00	5,000.00
01-515-289 CONTRACT SERVICES-IT ADMIN	3,000	3,000	10.44	581.79	1,345.06	5,820.45	213.41	(3,402.24)
01-515-290 CONTRACT SERVICES-IT FINANCE	3,000	3,000	0.00	62.49	1,025.00	0.00	2.08	2,937.51
01-515-291 CONTRACT SERVICES-IT COURT	3,000	3,000	0.00	0.00	0.00	0.00	0.00	3,000.00
01-515-292 CONTRACT SERVICES-IT PUBILC	1,500	1,500	0.00	95.00	0.00	0.00	6.33	1,405.00
01-515-293 CONTRACT SERVICES-IT CIVIC C	1,500	1,500	0.00	0.00	6,193.67	0.00	0.00	1,500.00
01-515-332 WEBSITE MAINTENANCE	25,000	25,000	0.00	12,784.50	13,807.14	0.00	51.14	12,215.50
01-515-333 CLOUD HOSTING FEES	0	0	0.00	0.00	0.00	0.00	0.00	0.00
01-515-460 COPIER CONTRACT & SUPPLIES	37,069	37,069	2,844.11	12,152.11	13,323.64	0.00	32.78	24,916.61
TOTAL OTHER EXPENSES	414,326	414,326	48,149.58	215,349.29	187,545.13	5,820.45	53.38	193,156.38
CAPITAL EXPENSES								
01-515-800 CAPITAL EXPENSE	0	0	0.00	0.00	0.00	0.00	0.00	0.00
TOTAL CAPITAL EXPENSES	0	0	0.00	0.00	0.00	0.00	0.00	0.00
OTHER INCOME/EXPENSES								
01-515-900 UNALLOCATED FUNDS	0	0	0.00	0.00	0.00	0.00	0.00	0.00
TOTAL OTHER INCOME/EXPENSES	0	0	0.00	0.00	0.00	0.00	0.00	0.00
TOTAL 15-TECH SUPPORT	414,326	414,326	48,149.58	215,349.29	187,545.13	5,820.45	53.38	193,156.38

REVENUE & EXPENSE REPORT (UNAUDITED)
AS OF: MARCH 31ST, 2025

01 -GENERAL FUND

% OF YEAR COMPLETED: 50.00

DEPARTMENTAL EXPENDITURES	ORIGINAL BUDGET	AMENDED BUDGET	CURRENT PERIOD	YEAR TO DATE BALANCE	PRIOR YEAR YTD BALANCE	TOTAL ENCUMBERED	% OF BUDGET	BUDGET BALANCE
16-PUBLIC WORKS								
SALARIES & BENEFITS								
01-516-010 PUBLIC WORKS SALARIES	447,918	447,918	32,794.94	195,503.50	203,650.40	0.00	43.65	252,414.54
01-516-012 STIPEND	0	0	0.00	0.00	0.00	0.00	0.00	0.00
01-516-015 P.W .INCENTIVE PAY-BILINGUAL	600	600	0.00	0.00	276.96	0.00	0.00	600.00
01-516-017 SALARIES-CERTIFICATION	0	0	92.32	276.96	0.00	0.00	0.00	(276.96)
01-516-018 P.W. EDUCATION PAY	600	600	0.00	0.00	0.00	0.00	0.00	600.00
01-516-020 PUBLIC WORKS OVERTIME	15,000	15,000	1,525.04	11,709.45	28,653.13	0.00	78.06	3,290.55
01-516-030 SOCIAL SECURITY	35,864	35,864	2,626.62	15,860.51	17,784.33	0.00	44.22	20,003.89
01-516-040 HEALTH INSURANCE	106,739	106,739	5,650.14	40,588.16	47,211.19	0.00	38.03	66,150.84
01-516-050 RETIREMENT	68,693	68,693	5,641.71	31,536.43	33,080.89	0.00	45.91	37,156.94
01-516-060 WORKERS' COMPENSATION	38,936	38,936	3,244.67	22,712.69	14,223.35	0.00	58.33	16,223.31
01-516-070 UNEMPLOYMENT COMPENSATION	1,215	1,215	151.11	946.84	1,074.50	0.00	77.93	268.16
01-516-080 CONTRACT LABOR	0	0	0.00	0.00	0.00	0.00	0.00	0.00
TOTAL SALARIES & BENEFITS	715,566	715,566	51,726.55	319,134.54	345,954.75	0.00	44.60	396,431.27
OTHER EXPENSES								
01-516-100 UTILITIES	96,191	96,191	17,872.01	32,301.42	40,925.53	0.00	33.58	63,889.44
01-516-130 TRAINING	2,500	2,500	0.00	175.00	72.00	0.00	7.00	2,325.00
01-516-240 CONTRACT OUT MAINTENANCE	5,000	5,000	0.00	0.00	0.00	0.00	0.00	5,000.00
01-516-430 SUPPLIES	15,000	15,000	1,244.98	9,448.25	5,475.72	79.95	63.52	5,471.80
01-516-431 EMPLOYEE APPRECIATION LUNCHE	1,500	1,500	0.00	0.00	466.56	0.00	0.00	1,500.00
01-516-480 UNIFORM ALLOWANCE	18,000	18,000	(278.43)	922.79	2,845.25	0.00	5.13	17,077.21
01-516-510 VEHICLE OUTSIDE MAINTENAN	0	0	0.00	0.00	0.00	0.00	0.00	0.00
01-516-525 EQUIPMENT RENTAL	2,500	2,500	210.70	984.30	1,397.26	0.00	39.37	1,515.70
01-516-530 STREET SIGNS & MARKERS	18,000	18,000	120.00	5,289.77	2,935.00	0.00	29.39	12,710.23
01-516-590 POSTAGE	0	0	0.00	0.00	0.00	0.00	0.00	0.00
01-516-630 FACILITIES MAINTENANCE	10,000	10,000	0.00	2,171.98	4,184.22	0.00	21.72	7,828.02
01-516-701 LEASE PURCHASE PRINCIPAL	0	0	0.00	0.00	0.00	0.00	0.00	0.00
01-516-702 LEASE PURCHASE INTEREST	0	0	0.00	0.00	0.00	0.00	0.00	0.00
01-516-710 STREET CRACK FILLING MATERIA	0	0	0.00	0.00	0.00	0.00	0.00	0.00
01-516-720 ALLEY/CURB/SIDEWALK REPAIR	0	0	0.00	0.00	0.00	0.00	0.00	0.00
TOTAL OTHER EXPENSES	168,691	168,691	19,169.26	51,293.51	58,301.54	79.95	30.45	117,317.40
CAPITAL EXPENSES								
01-516-800 CAPITAL EXPENDITURES	0	0	0.00	0.00	0.00	0.00	0.00	0.00
01-516-810 STREET CAPITAL REPAIRS	0	0	0.00	0.00	0.00	0.00	0.00	0.00
01-516-890 STREET SWEEPER PRINCIPAL	0	0	0.00	0.00	0.00	0.00	0.00	0.00
01-516-892 STREET SWEEPER INTEREST	0	0	0.00	0.00	0.00	0.00	0.00	0.00
TOTAL CAPITAL EXPENSES	0	0	0.00	0.00	0.00	0.00	0.00	0.00
OTHER INCOME/EXPENSES								
01-516-900 UNALLOCATED FUNDS	0	0	0.00	0.00	0.00	0.00	0.00	0.00
TOTAL OTHER INCOME/EXPENSES	0	0	0.00	0.00	0.00	0.00	0.00	0.00
TOTAL 16-PUBLIC WORKS	884,257	884,257	70,895.81	370,428.05	404,256.29	79.95	41.90	513,748.67

REVENUE & EXPENSE REPORT (UNAUDITED)
AS OF: MARCH 31ST, 2025

01 -GENERAL FUND

% OF YEAR COMPLETED: 50.00

DEPARTMENTAL EXPENDITURES	ORIGINAL BUDGET	AMENDED BUDGET	CURRENT PERIOD	YEAR TO DATE BALANCE	PRIOR YEAR YTD BALANCE	TOTAL ENCUMBERED	% OF BUDGET	BUDGET BALANCE
17-ANIMAL CONTROL								
SALARIES & BENEFITS								
01-517-010 SALARIES-ANIMAL CONTROL	77,440	77,440	3,236.92	30,508.96	27,695.72	0.00	39.40	46,931.09
01-517-012 STIPEND	0	0	0.00	0.00	0.00	0.00	0.00	0.00
01-517-013 Salaries - Animal on call	3,600	3,600	138.46	761.53	415.38	0.00	21.15	2,838.47
01-517-018 ANIMAL CONTROL EDUCATION PAY	0	0	0.00	0.00	276.96	0.00	0.00	0.00
01-517-020 OVERTIME-ANIMAL CONTROL	7,000	7,000	480.46	2,795.30	3,740.57	0.00	39.93	4,204.70
01-517-030 SOCIAL SECURITY	6,735	6,735	294.97	2,606.04	2,457.82	0.00	38.69	4,129.02
01-517-040 HEALTH INSURANCE	23,720	23,720	1,869.18	12,246.87	10,902.32	0.00	51.63	11,473.13
01-517-050 RETIREMENT	13,048	13,048	652.83	5,173.67	4,535.25	0.00	39.65	7,873.86
01-517-060 WORKER'S COMPENSATION	1,780	1,780	148.33	1,038.31	742.07	0.00	58.33	741.84
01-517-070 UNEMPLOYMENT COMPENSATION	504	504	17.29	270.56	223.43	0.00	53.68	233.44
TOTAL SALARIES & BENEFITS	133,827	133,827	6,838.44	55,401.24	50,989.52	0.00	41.40	78,425.55
OTHER EXPENSES								
01-517-230 VET/INPOUNDING/SHELTER	150,000	40,000	1,056.96	29,899.24	79,761.47	0.00	74.75	10,100.76
01-517-231 INPOUNDING/SHELTER	0	260,000	82,495.00	213,580.00	0.00	0.00	82.15	46,420.00
01-517-240 TRAINING & CERTIFICATION	2,000	2,000	0.00	105.48	119.00	0.00	5.27	1,894.52
01-517-420 EQUIPMENT	3,600	3,600	0.00	75.86	129.46	1,350.00	39.61	2,174.14
01-517-430 SUPPLIES	0	0	0.00	1,380.34	1,334.62	0.00	0.00	(1,380.34)
01-517-433 IT SOFTWARE HARDWARE &SUPP	500	500	0.00	0.00	0.00	0.00	0.00	500.00
01-517-480 UNIFORMS	800	800	0.00	246.00	0.00	0.00	30.75	554.00
TOTAL OTHER EXPENSES	156,900	306,900	83,551.96	245,286.92	81,344.55	1,350.00	80.36	60,263.08
CAPITAL EXPENSES								
01-517-800 CAPITAL EXPENDITURES	0	0	0.00	0.00	0.00	0.00	0.00	0.00
TOTAL CAPITAL EXPENSES	0	0	0.00	0.00	0.00	0.00	0.00	0.00
OTHER INCOME/EXPENSES								
01-517-900 UNALLOCATED FUNDS	0	0	0.00	0.00	0.00	0.00	0.00	0.00
TOTAL OTHER INCOME/EXPENSES	0	0	0.00	0.00	0.00	0.00	0.00	0.00
TOTAL 17-ANIMAL CONTROL	290,727	440,727	90,390.40	300,688.16	132,334.07	1,350.00	68.53	138,688.63

REVENUE & EXPENSE REPORT (UNAUDITED)
AS OF: MARCH 31ST, 2025

01 -GENERAL FUND

% OF YEAR COMPLETED: 50.00

DEPARTMENTAL EXPENDITURES	ORIGINAL BUDGET	AMENDED BUDGET	CURRENT PERIOD	YEAR TO DATE BALANCE	PRIOR YEAR YTD BALANCE	TOTAL ENCUMBERED	% OF BUDGET	BUDGET BALANCE
19-CODE ENFORCEMENT								
SALARIES & BENEFITS								
01-519-010 INSPECTION SALARIES	43,629	43,629	3,289.60	19,886.67	19,191.51	0.00	45.58	23,742.81
01-519-012 STIPEND	0	0	0.00	0.00	0.00	0.00	0.00	0.00
01-519-015 INSP.INCENTIVE PAY-BILINGUAL	0	0	0.00	0.00	0.00	0.00	0.00	0.00
01-519-018 INSPECTION EDUCATION PAY	600	600	46.16	276.96	276.96	0.00	46.16	323.04
01-519-020 OVERTIME	1,800	1,800	378.17	1,693.03	2,342.40	0.00	94.06	106.97
01-519-021 7K HOURS	3,272	3,272	0.00	0.00	0.00	0.00	0.00	3,272.21
01-519-026 HAZARDOUS DUTY PAY	360	360	0.00	0.00	0.00	0.00	0.00	360.00
01-519-030 SOCIAL SECURITY	3,801	3,801	284.11	1,672.02	1,668.52	0.00	43.99	2,128.70
01-519-040 HEALTH INSURANCE	11,861	11,861	26.44	158.64	111.29	0.00	1.34	11,702.36
01-519-050 RETIREMENT	7,363	7,363	608.60	3,325.70	3,105.97	0.00	45.17	4,037.27
01-519-060 WORKER'S COMPENSATION	2,415	2,415	201.25	1,408.75	1,006.25	0.00	58.33	1,006.25
01-519-070 UNEMPLOYMENT COMPENSATION	180	180	23.96	116.30	115.61	0.00	64.61	63.70
TOTAL SALARIES & BENEFITS	75,281	75,281	4,858.29	28,538.07	27,818.51	0.00	37.91	46,743.31
OTHER EXPENSES								
01-519-120 DUES & SUBSCRIPTIONS	1,000	1,000	0.00	0.00	0.00	0.00	0.00	1,000.00
01-519-125 CONTRACT INSPECTION SVCS	0	0	0.00	0.00	0.00	0.00	0.00	0.00
01-519-130 BONDS & TRAINING	2,000	2,000	0.00	0.00	0.00	0.00	0.00	2,000.00
01-519-150 CONTRACT SERVICES - INSPECTI	0	0	0.00	0.00	0.00	0.00	0.00	0.00
01-519-420 OFFICE SUPPLIES	0	0	0.00	0.00	0.00	0.00	0.00	0.00
01-519-430 SUPPLIES & EQUIPMENT	0	0	0.00	0.00	0.00	0.00	0.00	0.00
01-519-480 UNIFORMS	0	0	0.00	0.00	0.00	0.00	0.00	0.00
01-519-700 CONTINGENCIES	0	0	0.00	0.00	0.00	0.00	0.00	0.00
TOTAL OTHER EXPENSES	3,000	3,000	0.00	0.00	0.00	0.00	0.00	3,000.00
CAPITAL EXPENSES								
01-519-800 CAPITAL EXPENDITURES	0	0	0.00	0.00	0.00	0.00	0.00	0.00
TOTAL CAPITAL EXPENSES	0	0	0.00	0.00	0.00	0.00	0.00	0.00
OTHER INCOME/EXPENSES								
01-519-900 UNALLOCATED FUNDS	0	0	0.00	0.00	0.00	0.00	0.00	0.00
TOTAL OTHER INCOME/EXPENSES	0	0	0.00	0.00	0.00	0.00	0.00	0.00
TOTAL 19-CODE ENFORCEMENT	78,281	78,281	4,858.29	28,538.07	27,818.51	0.00	36.46	49,743.31

REVENUE & EXPENSE REPORT (UNAUDITED)
AS OF: MARCH 31ST, 2025

01 -GENERAL FUND

% OF YEAR COMPLETED: 50.00

DEPARTMENTAL EXPENDITURES	ORIGINAL BUDGET	AMENDED BUDGET	CURRENT PERIOD	YEAR TO DATE BALANCE	PRIOR YEAR YTD BALANCE	TOTAL ENCUMBERED	% OF BUDGET	BUDGET BALANCE
20-FINANCE								
SALARIES & BENEFITS								
01-520-010 FINANCE SALARIES	287,738	287,738	26,150.21	143,853.58	129,177.98	0.00	49.99	143,884.21
01-520-012 STIPEND	0	0	0.00	0.00	0.00	0.00	0.00	0.00
01-520-018 FINANCE EDUCATION PAY	1,200	1,200	46.16	484.68	553.92	0.00	40.39	715.32
01-520-020 FINANCE OVERTIME	3,000	3,000	11.62	83.77	203.70	0.00	2.79	2,916.23
01-520-030 FINANCE SOCIAL SECURITY	22,517	22,517	2,003.42	10,769.95	9,616.78	0.00	47.83	11,746.89
01-520-040 FINANCE HEALTH INSURANCE	47,441	47,441	2,869.36	22,786.02	22,454.20	0.00	48.03	24,654.98
01-520-050 FINANCE RETIREMENT	43,443	43,443	4,306.54	22,049.21	18,551.37	0.00	50.75	21,393.81
01-520-060 WORKER'S COMPENSATION	585	585	48.75	341.25	243.75	0.00	58.33	243.75
01-520-070 UNEMPLOYMENT COMPENSATION	540	540	23.44	512.19	446.62	0.00	94.85	27.81
TOTAL SALARIES & BENEFITS	406,464	406,464	35,459.50	200,880.65	181,248.32	0.00	49.42	205,583.00
OTHER EXPENSES								
01-520-120 DUES & SUBSCRIPTIONS	3,000	3,000	0.00	1,825.00	2,843.90	0.00	60.83	1,175.00
01-520-130 BONDS & TRAINING	9,000	9,000	224.34	3,959.76	2,441.70	0.00	44.00	5,040.24
01-520-260 DUES & FEES- BCAD	0	0	0.00	0.00	0.00	0.00	0.00	0.00
01-520-400 BANK/CREDIT CARD TERMINAL CH	0	0	0.00	0.00	0.00	0.00	0.00	0.00
01-520-420 OFFICE SUPPLIES	6,000	6,000	0.00	3,597.33	1,569.17	0.00	59.96	2,402.67
01-520-431 EMPLOYEE APPRECIATION LUNCHE	0	0	0.00	0.00	0.00	0.00	0.00	0.00
01-520-590 POSTAGE	1,500	1,500	0.00	420.90	981.89	0.00	28.06	1,079.10
01-520-600 OFFICE EQUIP. & MAINT	0	0	0.00	0.00	0.00	0.00	0.00	0.00
01-520-700 CONTINGENCIES	0	0	0.00	0.00	0.00	0.00	0.00	0.00
TOTAL OTHER EXPENSES	19,500	19,500	224.34	9,802.99	7,836.66	0.00	50.27	9,697.01
CAPITAL EXPENSES								
01-520-800 CAPITAL EXPENDITURES	0	0	0.00	0.00	0.00	0.00	0.00	0.00
TOTAL CAPITAL EXPENSES	0	0	0.00	0.00	0.00	0.00	0.00	0.00
OTHER INCOME/EXPENSES								
01-520-900 UNALLOCATED FUNDS	0	0	0.00	0.00	0.00	0.00	0.00	0.00
TOTAL OTHER INCOME/EXPENSES	0	0	0.00	0.00	0.00	0.00	0.00	0.00
TOTAL 20-FINANCE	425,964	425,964	35,683.84	210,683.64	189,084.98	0.00	49.46	215,280.01

REVENUE & EXPENSE REPORT (UNAUDITED)
AS OF: MARCH 31ST, 2025

01 -GENERAL FUND

% OF YEAR COMPLETED: 50.00

DEPARTMENTAL EXPENDITURES	ORIGINAL BUDGET	AMENDED BUDGET	CURRENT PERIOD	YEAR TO DATE BALANCE	PRIOR YEAR YTD BALANCE	TOTAL ENCUMBERED	% OF BUDGET	BUDGET BALANCE
25-CITY MANAGEMENT								
SALARIES & BENEFITS								
01-525-010 CITY MANAGEMENT SALARIES	168,585	168,585	0.00	109,067.74	77,808.36	0.00	64.70	59,516.90
01-525-012 STIPEND	0	0	0.00	0.00	0.00	0.00	0.00	0.00
01-525-030 SOCIAL SECURITY	12,897	12,897	0.00	7,818.83	5,529.24	0.00	60.63	5,077.89
01-525-040 HEALTH INSURANCE	11,860	11,860	970.46	5,958.40	5,706.85	0.00	50.24	5,901.95
01-525-050 RETIREMENT	24,984	24,984	561.31	16,725.13	11,107.14	0.00	66.94	8,259.11
01-525-060 WORKER'S COMPENSATION	585	585	48.75	341.25	243.75	0.00	58.33	243.75
01-525-070 UNEMPLOYMENT COMPENSATION	135	135	0.00	117.00	111.66	0.00	86.67	18.00
01-525-080 CONTRACT LABOR - HR	0	0	0.00	0.00	0.00	0.00	0.00	0.00
TOTAL SALARIES & BENEFITS	219,046	219,046	1,580.52	140,028.35	100,507.00	0.00	63.93	79,017.60
OTHER EXPENSES								
01-525-120 DUES & SUBSCRIPTIONS	2,000	2,000	0.00	1,378.96	357.72	0.00	68.95	621.04
01-525-130 BONDS & TRAINING	3,500	3,500	0.00	0.00	0.00	0.00	0.00	3,500.00
01-525-420 OFFICE SUPPLIES	1,000	1,000	0.00	0.00	49.95	0.00	0.00	1,000.00
01-525-640 EMPLOYEE RECOGNITION	6,800	6,800	0.00	0.00	2,411.73	0.00	0.00	6,800.00
01-525-645 MEALS & ENTERTAINMENT	1,000	1,000	0.00	117.98	0.00	0.00	11.80	882.02
01-525-646 MEIA TERMINATION	0	0	0.00	0.00	700,000.00	0.00	0.00	0.00
TOTAL OTHER EXPENSES	14,300	14,300	0.00	1,496.94	702,819.40	0.00	10.47	12,803.06
OTHER INCOME/EXPENSES								
01-525-900 TRANSFERS	0	0	0.00	0.00	0.00	0.00	0.00	0.00
01-525-901 TRANSFER TO STREETS FUND	0	0	0.00	0.00	0.00	0.00	0.00	0.00
01-525-902 UNALLOCATED FUNDS	0	0	0.00	0.00	0.00	0.00	0.00	0.00
TOTAL OTHER INCOME/EXPENSES	0	0	0.00	0.00	0.00	0.00	0.00	0.00
TOTAL 25-CITY MANAGEMENT	233,346	233,346	1,580.52	141,525.29	803,326.40	0.00	60.65	91,820.66

REVENUE & EXPENSE REPORT (UNAUDITED)
AS OF: MARCH 31ST, 2025

01 -GENERAL FUND

% OF YEAR COMPLETED: 50.00

DEPARTMENTAL EXPENDITURES	ORIGINAL BUDGET	AMENDED BUDGET	CURRENT PERIOD	YEAR TO DATE BALANCE	PRIOR YEAR YTD BALANCE	TOTAL ENCUMBERED	% OF BUDGET	BUDGET BALANCE
26-POOL								
SALARIES & BENEFITS								
01-526-010 SALARIES	0	0	0.00	0.00	0.00	0.00	0.00	0.00
01-526-020 OVERTIME	0	0	0.00	0.00	0.00	0.00	0.00	0.00
01-526-030 SOCIAL SECURITY	0	0	0.00	0.00	0.00	0.00	0.00	0.00
01-526-040 HEALTH INSURANCE	0	0	0.00	0.00	0.00	0.00	0.00	0.00
01-526-050 RETIREMENT	0	0	0.00	0.00	0.00	0.00	0.00	0.00
01-526-060 WORKER'S COMPENSATION	0	0	0.00	0.00	0.00	0.00	0.00	0.00
01-526-070 UNEMPLOYMENT COMPENSATION	0	0	0.00	0.00	0.00	0.00	0.00	0.00
TOTAL SALARIES & BENEFITS	0	0	0.00	0.00	0.00	0.00	0.00	0.00
OTHER EXPENSES								
01-526-100 UTILITIES	7,500	7,500	39.38	201.95	3,255.56	0.00	2.69	7,298.05
01-526-130 BONDS & TRAINING	0	0	0.00	0.00	0.00	0.00	0.00	0.00
01-526-140 EMPLOYMENT SCREENING	0	0	0.00	0.00	0.00	0.00	0.00	0.00
01-526-210 EQUIPMENT LEASE	0	0	0.00	0.00	0.00	0.00	0.00	0.00
01-526-255 CONTRACT SERVICES - POOL	0	0	0.00	0.00	0.00	0.00	0.00	0.00
01-526-420 OFFICE SUPPLIES	0	0	0.00	0.00	0.00	0.00	0.00	0.00
01-526-430 MISCELLANEOUS SUPPLIES	2,000	2,000	0.00	0.00	1,095.13	0.00	0.00	2,000.00
01-526-431 POOL CHEMICALS	6,500	6,500	0.00	0.00	373.94	0.00	0.00	6,500.00
01-526-480 UNIFORM ALLOWANCE	0	0	0.00	0.00	0.00	0.00	0.00	0.00
01-526-500 VEHICLE PARTS	0	0	0.00	0.00	0.00	0.00	0.00	0.00
01-526-510 VEHICLE OUTSIDE MAINTENANCE	0	0	0.00	0.00	0.00	0.00	0.00	0.00
01-526-520 EQUIPMENT REPAIR	0	0	0.00	0.00	0.00	0.00	0.00	0.00
01-526-630 FACILITY MAINTENANCE	1,500	1,500	0.00	0.00	974.16	0.00	0.00	1,500.00
01-526-700 CONTINGENCIES	0	0	0.00	0.00	0.00	0.00	0.00	0.00
TOTAL OTHER EXPENSES	17,500	17,500	39.38	201.95	5,698.79	0.00	1.15	17,298.05
CAPITAL EXPENSES								
01-526-800 CAPITAL EXPENDITURES	0	0	0.00	0.00	0.00	0.00	0.00	0.00
TOTAL CAPITAL EXPENSES	0	0	0.00	0.00	0.00	0.00	0.00	0.00
OTHER INCOME/EXPENSES								
01-526-900 UNALLOCATED FUNDS	0	0	0.00	0.00	0.00	0.00	0.00	0.00
TOTAL OTHER INCOME/EXPENSES	0	0	0.00	0.00	0.00	0.00	0.00	0.00
TOTAL 26-POOL	17,500	17,500	39.38	201.95	5,698.79	0.00	1.15	17,298.05

REVENUE & EXPENSE REPORT (UNAUDITED)
AS OF: MARCH 31ST, 2025

01 -GENERAL FUND

% OF YEAR COMPLETED: 50.00

DEPARTMENTAL EXPENDITURES	ORIGINAL BUDGET	AMENDED BUDGET	CURRENT PERIOD	YEAR TO DATE BALANCE	PRIOR YEAR YTD BALANCE	TOTAL ENCUMBERED	% OF BUDGET	BUDGET BALANCE
27-POST OFFICE								
SALARIES & BENEFITS								
01-527-010 POST OFFICE SALARIES	50,384	50,384	1,464.00	15,651.63	25,259.63	0.00	31.06	34,732.48
01-527-012 STIPEND	0	0	0.00	0.00	0.00	0.00	0.00	0.00
01-527-015 P. O. INCENTIVE PAY-BILINGUA	0	0	0.00	0.00	0.00	0.00	0.00	0.00
01-527-020 OVERTIME - POST OFFICE	1,200	1,200	21.41	188.33	140.25	0.00	15.69	1,011.67
01-527-030 SOCIAL SECURITY	3,946	3,946	113.64	1,211.74	1,943.11	0.00	30.71	2,734.44
01-527-040 HEALTH INSURANCE	11,860	11,860	965.84	7,741.98	5,495.03	0.00	65.28	4,118.37
01-527-050 RETIREMENT	7,645	7,645	253.01	2,404.02	2,619.66	0.00	31.45	5,240.75
01-527-060 WORKER'S COMPENSATION	2,462	2,462	205.17	1,436.20	869.44	0.00	58.33	1,025.80
01-527-070 UNEMPLOYMENT COMPENSATION	175	175	19.31	134.61	144.23	0.00	76.92	40.39
TOTAL SALARIES & BENEFITS	77,672	77,672	3,042.38	28,768.51	36,471.35	0.00	37.04	48,903.90
OTHER EXPENSES								
01-527-120 DUES & SUBSCRIPTIONS	0	0	0.00	0.00	0.00	0.00	0.00	0.00
01-527-130 BONDS & TRAINING	0	0	0.00	0.00	0.00	0.00	0.00	0.00
01-527-420 OFFICE SUPPLIES - POST OFFIC	6,000	6,000	0.00	131.00	1,131.14	0.00	2.18	5,869.00
01-527-421 CONTRACT / SEASONAL HELP	3,200	3,200	0.00	0.00	0.00	0.00	0.00	3,200.00
01-527-590 POSTAGE - POST OFFICE	0	0	0.00	0.00	0.00	0.00	0.00	0.00
01-527-600 OFFICE EQUIPMENT & MAINTENAN	0	0	0.00	0.00	0.00	0.00	0.00	0.00
01-527-610 OFFICE EQUIPMENT LEASE	8,000	8,000	0.00	1,560.70	3,077.85	0.00	19.51	6,439.30
01-527-710 INVENTORY ADJUSTMENTS	400	400	0.00	0.00	0.00	0.00	0.00	400.00
TOTAL OTHER EXPENSES	17,600	17,600	0.00	1,691.70	4,208.99	0.00	9.61	15,908.30
CAPITAL EXPENSES								
01-527-800 CAPITAL EXPENSE	0	0	0.00	0.00	0.00	0.00	0.00	0.00
TOTAL CAPITAL EXPENSES	0	0	0.00	0.00	0.00	0.00	0.00	0.00
OTHER INCOME/EXPENSES								
01-527-900 UNALLOCATED FUNDS	0	0	0.00	0.00	0.00	0.00	0.00	0.00
TOTAL OTHER INCOME/EXPENSES	0	0	0.00	0.00	0.00	0.00	0.00	0.00
TOTAL 27-POST OFFICE	95,272	95,272	3,042.38	30,460.21	40,680.34	0.00	31.97	64,812.20

REVENUE & EXPENSE REPORT (UNAUDITED)
AS OF: MARCH 31ST, 2025

01 -GENERAL FUND

% OF YEAR COMPLETED: 50.00

DEPARTMENTAL EXPENDITURES	ORIGINAL BUDGET	AMENDED BUDGET	CURRENT PERIOD	YEAR TO DATE BALANCE	PRIOR YEAR YTD BALANCE	TOTAL ENCUMBERED	% OF BUDGET	BUDGET BALANCE
28-HUMAN RESOUCES								
OTHER EXPENSES								
01-528-130 INSURANCE ADMIN. FEES	5,000	5,000	580.00	2,080.00	2,118.48	0.00	41.60	2,920.00
01-528-140 EMPLOYMENT SCREENING/RECRUIT	15,000	15,000	2,306.76	7,511.00	7,643.61	0.00	50.07	7,489.00
01-528-141 ADP SERVICES	70,000	70,000	7,076.55	36,464.55	33,651.00	0.00	52.09	33,535.45
01-528-142 RECOGNITION PROGRAM	2,700	2,700	0.00	1,652.72	1,808.25	0.00	61.21	1,047.28
01-528-150 EMP MED COST ASSIST	50,000	50,000	10,376.03	23,342.94	11,587.26	0.00	46.69	26,657.06
01-528-162 INSURANCE INCREASE	0	0	0.00	0.00	0.00	0.00	0.00	0.00
01-528-180 COLA 4%	0	0	0.00	0.00	0.00	0.00	0.00	0.00
01-528-701 PRIOR YEAR ADJUSTMENTS	0	0	0.00	0.00	0.00	0.00	0.00	0.00
TOTAL OTHER EXPENSES	142,700	142,700	20,339.34	71,051.21	56,808.60	0.00	49.79	71,648.79
OTHER INCOME/EXPENSES								
01-528-900 UNALLOCATED FUNDS	0	0	0.00	0.00	0.00	0.00	0.00	0.00
TOTAL OTHER INCOME/EXPENSES	0	0	0.00	0.00	0.00	0.00	0.00	0.00
TOTAL 28-HUMAN RESOUCES	142,700	142,700	20,339.34	71,051.21	56,808.60	0.00	49.79	71,648.79

REVENUE & EXPENSE REPORT (UNAUDITED)
AS OF: MARCH 31ST, 2025

01 -GENERAL FUND

% OF YEAR COMPLETED: 50.00

DEPARTMENTAL EXPENDITURES	ORIGINAL BUDGET	AMENDED BUDGET	CURRENT PERIOD	YEAR TO DATE BALANCE	PRIOR YEAR YTD BALANCE	TOTAL ENCUMBERED	% OF BUDGET	BUDGET BALANCE
30-CAPITAL								
OTHER EXPENSES								
01-530-506 PARKS CAPITAL	0	0	0.00	0.00	0.00	0.00	0.00	0.00
01-530-507 FLEET CAPITAL	0	0	0.00	0.00	0.00	0.00	0.00	0.00
01-530-508 COURT CAPITAL	0	0	0.00	0.00	0.00	0.00	0.00	0.00
01-530-525 CITY MANAGER CAPITAL	0	0	0.00	0.00	0.00	0.00	0.00	0.00
01-530-526 POOL CAPITAL	0	0	0.00	0.00	0.00	0.00	0.00	0.00
01-530-527 POST OFFICE CAPITAL	0	0	0.00	0.00	0.00	0.00	0.00	0.00
01-530-528 HUMAN RESOURCES CAPITAL	0	0	0.00	0.00	0.00	0.00	0.00	0.00
TOTAL OTHER EXPENSES	0	0	0.00	0.00	0.00	0.00	0.00	0.00
CAPITAL EXPENSES								
01-530-801 ADMIN CAPITAL	0	0	0.00	0.00	0.00	0.00	0.00	0.00
01-530-802 POLICE CAPITAL	0	0	0.00	0.00	0.00	0.00	0.00	0.00
01-530-803 FIRE CAPITAL	21,145	21,145	21,145.00	21,145.00	8,665.00	0.00	100.00	0.00
01-530-804 SPECIAL SERVICES CAPITAL	0	0	0.00	0.00	0.00	0.00	0.00	0.00
01-530-806 PARKS CAPITAL	114,627	114,627	0.00	0.00	13,987.55	0.00	0.00	114,627.00
01-530-810 FACILITY CAPITAL	0	0	0.00	0.00	5,440.00	0.00	0.00	0.00
01-530-811 CIVIC CENTER CAPITAL	0	0	6,097.21	6,097.21	4,998.00	0.00	0.00	(6,097.21)
01-530-814 CONTRACT SERVICES CAPITAL	0	0	0.00	0.00	0.00	0.00	0.00	0.00
01-530-815 TECH SUPPORT CAPITAL	65,000	65,000	0.00	11,269.39	0.00	0.00	17.34	53,730.61
01-530-816 PUBLIC WORKS CAPITAL	25,000	25,000	2,118.81	14,563.83	18,482.86	0.00	58.26	10,436.17
01-530-817 ANIMAL CONTROL CAPITAL	0	0	0.00	0.00	0.00	0.00	0.00	0.00
01-530-819 CODE ENFORCEMENT CAPITAL	0	0	0.00	0.00	0.00	0.00	0.00	0.00
01-530-820 FINANCE CAPITAL	0	0	0.00	0.00	0.00	0.00	0.00	0.00
TOTAL CAPITAL EXPENSES	225,772	225,772	29,361.02	53,075.43	51,573.41	0.00	23.51	172,696.57
OTHER INCOME/EXPENSES								
01-530-925 TRANSFER OUT TO STREETS	0	0	0.00	0.00	0.00	0.00	0.00	0.00
TOTAL OTHER INCOME/EXPENSES	0	0	0.00	0.00	0.00	0.00	0.00	0.00
TOTAL 30-CAPITAL	225,772	225,772	29,361.02	53,075.43	51,573.41	0.00	23.51	172,696.57

REVENUE & EXPENSE REPORT (UNAUDITED)
AS OF: MARCH 31ST, 2025

01 -GENERAL FUND

% OF YEAR COMPLETED: 50.00

DEPARTMENTAL EXPENDITURES	ORIGINAL BUDGET	AMENDED BUDGET	CURRENT PERIOD	YEAR TO DATE BALANCE	PRIOR YEAR YTD BALANCE	TOTAL ENCUMBERED	% OF BUDGET	BUDGET BALANCE
00-GENERAL EXPENDITURES								
SALARIES & BENEFITS								
01-500-030 SOCIAL SECURITY	0	0	0.00	0.00	0.00	0.00	0.00	0.00
01-500-050 RETIREMENT	0	0	0.00	0.00	0.00	0.00	0.00	0.00
TOTAL SALARIES & BENEFITS	0	0	0.00	0.00	0.00	0.00	0.00	0.00
TOTAL 00-GENERAL EXPENDITURES	0	0	0.00	0.00	0.00	0.00	0.00	0.00
TOTAL EXPENDITURES	10,813,527	11,044,107	846,007.39	5,171,044.20	5,590,720.09	32,342.23	47.11	5,840,720.49
REVENUE OVER/(UNDER) EXPENDITURES	(163,622)	(433,810)	(59,981.48)	808,664.55	735,556.83	(32,342.23)	178.95-	(1,210,132.13)

BALANCE SHEET
AS OF: MARCH 31ST, 2025

02 -GARBAGE FUND

ACCOUNT #	ACCOUNT DESCRIPTION	BALANCE		
ASSETS				
02-1100	CASH	29,146.22		
02-1102	CLAIM ON CASH	684,852.86		
02-1105	SAVINGS	525.20		
02-1115	INVESTMENT - TEXPOOL	432.15		
02-1200	BUILDING AND IMPROVEMENTS	12,240.00		
02-1201	FURNITURE AND EQUIPMENT	157,171.19		
02-1220	ACC. DEPR.-BULDINGS&IMPROV.	(3,978.00)		
02-1221	ACC. DEPR.-EQUIP	(63,651.68)		
02-1315	DUE FROM GENERAL FUND	0.00		
02-1601	A/R-COMMERCIAL GARBAGE	233,700.24		
02-1605	A/R-RESIDENTIAL GARBAGE	80,581.29		
02-1606	ALLOW FOR DOUBTFUL ACCTS	(126,463.69)		
02-1607	A/R-RECYCLING INCOME	0.00		
02-1608	A/R - UNAPPLIED CREDITS	(19,696.75)		
02-1610	A/R-ACCRUED INTEREST	0.00		
			984,859.03	
	TOTAL ASSETS			984,859.03
LIABILITIES				
02-2200	WAGES PAYABLE	0.00		
02-2315	DUE TO GENERAL FUND	0.00		
02-2400	A/P PENDING	(759.73)		
02-2401	AP MANUAL	0.00		
02-2410	A/P-SALES TAX	988.24		
02-2415	A/P-GARBAGE CONTRACTOR	0.00		
02-2420	DEFERRED REVENUE-RESIDENT	0.00		
02-2600	NOTE PAYABLE-CURRENT	26,006.00		
02-2605	NOTE PAYABLE-LONG-TERM	56,953.00		
	TOTAL LIABILITIES		83,187.51	
EQUITY				
02-3201	FUND BALANCE	456,838.73		
02-3205	NET INVESTMENT IN CAPITAL ASST	18,822.51		
	TOTAL BEGINNING EQUITY	475,661.24		
	TOTAL REVENUE	1,677,109.42		
	TOTAL EXPENSES	1,251,099.14		
	TOTAL INCREASE/(DECREASE) IN FUND BAL.	426,010.28		
	TOTAL EQUITY & FUND BALANCE		901,671.52	
	TOTAL LIABILITIES, EQUITY & FUND BALANCE			984,859.03

REVENUE & EXPENSE REPORT (UNAUDITED)
AS OF: MARCH 31ST, 2025

02 -GARBAGE FUND

% OF YEAR COMPLETED: 50.00

	ORIGINAL BUDGET	AMENDED BUDGET	CURRENT PERIOD	YEAR TO DATE BALANCE	PRIOR YEAR YTD BALANCE	TOTAL ENCUMBERED	% OF BUDGET	BUDGET BALANCE
REVENUE SUMMARY								
ALL REVENUES	3,262,946	3,262,946	212,393.96	1,677,109.42	1,977,134.54	0.00	51.40	1,585,836.12
TOTAL REVENUES	3,262,946	3,262,946	212,393.96	1,677,109.42	1,977,134.54	0.00	51.40	1,585,836.12
EXPENDITURE SUMMARY								
00-GENERAL EXPENDITURES								
SALARIES & BENEFITS	72,054	72,054	7,169.06	37,037.48	31,433.02	0.00	51.40	35,016.95
OTHER EXPENSES	2,951,748	2,951,748	209,763.18	1,089,061.66	1,102,243.92	0.00	36.90	1,862,686.44
CAPITAL EXPENSES	0	0	0.00	0.00	0.00	0.00	0.00	0.00
OTHER INCOME/EXPENSES	450,000	450,000	125,000.00	125,000.00	0.00	0.00	27.78	325,000.00
TOTAL 00-GENERAL EXPENDITURES	3,473,803	3,473,803	341,932.24	1,251,099.14	1,133,676.94	0.00	36.02	2,222,703.39
TOTAL EXPENDITURES	3,473,803	3,473,803	341,932.24	1,251,099.14	1,133,676.94	0.00	36.02	2,222,703.39
REVENUE OVER/(UNDER) EXPENDITURES	(210,857)	(210,857)	(129,538.28)	426,010.28	843,457.60	0.00	202.04-	(636,867.27)

REVENUE & EXPENSE REPORT (UNAUDITED)
AS OF: MARCH 31ST, 2025

02 -GARBAGE FUND

% OF YEAR COMPLETED: 50.00

REVENUES	ORIGINAL BUDGET	AMENDED BUDGET	CURRENT PERIOD	YEAR TO DATE BALANCE	PRIOR YEAR YTD BALANCE	TOTAL ENCUMBERED	% OF BUDGET	BUDGET BALANCE
02-4101 INCOME-COMMERCIAL	2,495,634	2,495,634	211,637.09	1,252,610.81	1,211,472.71	0.00	50.19	1,243,023.57
02-4105 INCOME-RESIDENTIAL	747,311	747,311	(506.51)	392,440.44	739,815.05	0.00	52.51	354,870.72
02-4107 INCOME-RECYCLING	0	0	0.00	0.00	0.00	0.00	0.00	0.00
02-4110 INCOME-LATE CHARGE	29,000	29,000	1,153.66	31,212.32	24,917.73	0.00	107.63	(2,212.32)
02-4115 INCOME-INTEREST	1,000	1,000	77.14	484.53	581.39	0.00	48.45	515.47
02-4130 INCOME - MISCELLANEOUS	0	0	32.58	361.32	347.66	0.00	0.00	(361.32)
02-4475 INCOME - BAD DEBT	(10,000)	(10,000)	0.00	0.00	0.00	0.00	0.00	(10,000.00)
TOTAL REVENUES	3,262,946	3,262,946	212,393.96	1,677,109.42	1,977,134.54	0.00	51.40	1,585,836.12

REVENUE & EXPENSE REPORT (UNAUDITED)
AS OF: MARCH 31ST, 2025

02 -GARBAGE FUND

% OF YEAR COMPLETED: 50.00

DEPARTMENTAL EXPENDITURES	ORIGINAL BUDGET	AMENDED BUDGET	CURRENT PERIOD	YEAR TO DATE BALANCE	PRIOR YEAR YTD BALANCE	TOTAL ENCUMBERED	% OF BUDGET	BUDGET BALANCE
00-GENERAL EXPENDITURES								
SALARIES & BENEFITS								
02-500-010 SALARIES	45,320	45,320	3,418.67	21,147.05	20,162.51	0.00	46.66	24,173.31
02-500-018 EDUCATION PAY	0	0	0.00	0.00	0.00	0.00	0.00	0.00
02-500-020 OVERTIME	2,700	2,700	10.25	52.67	7.85	0.00	1.95	2,647.33
02-500-030 SOCIAL SECURITY	3,675	3,675	252.75	1,602.65	1,543.06	0.00	43.61	2,072.57
02-500-040 HEALTH INSURANCE	11,861	11,861	2,813.93	10,142.67	5,512.79	0.00	85.51	1,718.33
02-500-050 RETIREMENT	7,120	7,120	535.59	3,205.92	2,879.52	0.00	45.03	3,913.93
02-500-060 WORKERS' COMPENSATION	1,243	1,243	103.58	725.06	1,208.78	0.00	58.33	517.94
02-500-070 UNEMPLOYMENT COMPENSATION	135	135	34.29	161.46	118.51	0.00	119.60	(26.46)
TOTAL SALARIES & BENEFITS	72,054	72,054	7,169.06	37,037.48	31,433.02	0.00	51.40	35,016.95
OTHER EXPENSES								
02-500-120 DUES & SUBSCRIPTIONS	300	300	0.00	0.00	0.00	0.00	0.00	300.00
02-500-250 LEGAL & CITY ATTORNEY	5,000	5,000	0.00	0.00	537.00	0.00	0.00	5,000.00
02-500-320 ENGINEER/ARCHITECT	0	0	0.00	0.00	0.00	0.00	0.00	0.00
02-500-420 SUPPLIES	1,500	1,500	0.00	0.00	146.71	0.00	0.00	1,500.00
02-500-501 EXPENSES-COMMERCIAL	2,026,895	2,026,895	152,106.97	795,458.73	819,941.50	0.00	39.25	1,231,436.65
02-500-502 EXPENSES-RESIDENTIAL	646,453	646,453	55,131.00	275,655.00	261,510.00	0.00	42.64	370,797.72
02-500-503 EXPENSES-ADMINISTRATIVE	0	0	0.00	0.00	0.00	0.00	0.00	0.00
02-500-504 EXPENSES-BAD DEBT	0	0	0.00	0.00	0.00	0.00	0.00	0.00
02-500-505 EXPENSES-MED.WASTE&CLEAN UP	0	0	0.00	0.00	0.00	0.00	0.00	0.00
02-500-590 POSTAGE	5,000	5,000	0.00	2,412.20	2,331.33	0.00	48.24	2,587.80
02-500-591 EXPENSE - ALLY REPAIR	200,000	200,000	0.00	384.47	1,768.39	0.00	0.19	199,615.53
02-500-592 EXPENSES - ADDITIONAL CITY S	0	0	0.00	0.00	0.00	0.00	0.00	0.00
02-500-610 EQUIPMENT LEASE	3,600	3,600	0.00	0.00	857.73	0.00	0.00	3,600.00
02-500-700 DEPRECIATION	32,000	32,000	0.00	0.00	0.00	0.00	0.00	32,000.00
02-500-701 LEASE PURCHASE PRINCIPAL	23,000	23,000	2,161.38	12,807.04	12,058.51	0.00	55.68	10,192.96
02-500-702 LEASE PURCHASE INTEREST	8,000	8,000	363.83	2,344.22	3,092.75	0.00	29.30	5,655.78
TOTAL OTHER EXPENSES	2,951,748	2,951,748	209,763.18	1,089,061.66	1,102,243.92	0.00	36.90	1,862,686.44
CAPITAL EXPENSES								
02-500-800 CAPITAL EXPENDITURES	0	0	0.00	0.00	0.00	0.00	0.00	0.00
TOTAL CAPITAL EXPENSES	0	0	0.00	0.00	0.00	0.00	0.00	0.00
OTHER INCOME/EXPENSES								
02-500-900 EXPENSES-TRANSFER GENERAL FU	450,000	450,000	125,000.00	125,000.00	0.00	0.00	27.78	325,000.00
TOTAL OTHER INCOME/EXPENSES	450,000	450,000	125,000.00	125,000.00	0.00	0.00	27.78	325,000.00
TOTAL 00-GENERAL EXPENDITURES	3,473,803	3,473,803	341,932.24	1,251,099.14	1,133,676.94	0.00	36.02	2,222,703.39
TOTAL EXPENDITURES	3,473,803	3,473,803	341,932.24	1,251,099.14	1,133,676.94	0.00	36.02	2,222,703.39
REVENUE OVER/(UNDER) EXPENDITURES	(210,857)	(210,857)	(129,538.28)	426,010.28	843,457.60	0.00	202.04-	(636,867.27)

04 -ASSET SEIZ FUND- FEDERAL

ACCOUNT #	ACCOUNT DESCRIPTION	BALANCE		
ASSETS				
======				
04-1102	CLAIM ON CASH	136.56		
04-1105	SAVINGS	395.98		
04-1115	INVESTMENTS	0.00		
04-1315	DUE FROM GENERAL FUND	0.00		
04-1515	A/R-ACCRUED INTEREST	0.00		
04-1550	A/R-MISCELLANEOUS	0.00		
			532.54	
	TOTAL ASSETS			532.54
				==========
LIABILITIES				
==========				
04-2315	DUE TO GENERAL FUND	0.00		
04-2400	A/P PENDING	0.00		
	TOTAL LIABILITIES		0.00	
EQUITY				
======				
04-3201	FUND BALANCE-RESTRICTED	526.07		
	TOTAL BEGINNING EQUITY	526.07		
	TOTAL REVENUE	6.47		
	TOTAL EXPENSES	0.00		
	TOTAL INCREASE/(DECREASE) IN FUND BAL.	6.47		
	TOTAL EQUITY & FUND BALANCE		532.54	
	TOTAL LIABILITIES, EQUITY & FUND BALANCE			532.54
				==========

REVENUE & EXPENSE REPORT (UNAUDITED)
AS OF: MARCH 31ST, 2025

04 -ASSET SEIZ FUND- FEDERAL

% OF YEAR COMPLETED: 50.00

	ORIGINAL BUDGET	AMENDED BUDGET	CURRENT PERIOD	YEAR TO DATE BALANCE	PRIOR YEAR YTD BALANCE	TOTAL ENCUMBERED	% OF BUDGET	BUDGET BALANCE
REVENUE SUMMARY								
ALL REVENUES	0	0	1.03	6.47	7.76	0.00	0.00	(6.47)
TOTAL REVENUES	0	0	1.03	6.47	7.76	0.00	0.00	(6.47)
EXPENDITURE SUMMARY								
00-GENERAL EXPENDITURES								
SALARIES & BENEFITS	0	0	0.00	0.00	0.00	0.00	0.00	0.00
CAPITAL EXPENSES	0	0	0.00	0.00	0.00	0.00	0.00	0.00
TOTAL 00-GENERAL EXPENDITURES	0	0	0.00	0.00	0.00	0.00	0.00	0.00
TOTAL EXPENDITURES	0	0	0.00	0.00	0.00	0.00	0.00	0.00
REVENUE OVER/(UNDER) EXPENDITURES	0	0	1.03	6.47	7.76	0.00	0.00	(6.47)

REVENUE & EXPENSE REPORT (UNAUDITED)
AS OF: MARCH 31ST, 2025

04 -ASSET SEIZ FUND- FEDERAL

% OF YEAR COMPLETED: 50.00

REVENUES	ORIGINAL BUDGET	AMENDED BUDGET	CURRENT PERIOD	YEAR TO DATE BALANCE	PRIOR YEAR YTD BALANCE	TOTAL ENCUMBERED	% OF BUDGET	BUDGET BALANCE
04-4101 INCOME-COURT FORFEITED PR	0	0	0.00	0.00	0.00	0.00	0.00	0.00
04-4105 INCOME-ABAND/SEIZED PROP	0	0	0.00	0.00	0.00	0.00	0.00	0.00
04-4115 INCOME-INTEREST	0	0	1.03	6.47	7.76	0.00	0.00	(6.47)
TOTAL REVENUES	0	0	1.03	6.47	7.76	0.00	0.00	(6.47)

REVENUE & EXPENSE REPORT (UNAUDITED)
AS OF: MARCH 31ST, 2025

04 -ASSET SEIZ FUND- FEDERAL

% OF YEAR COMPLETED: 50.00

DEPARTMENTAL EXPENDITURES	ORIGINAL BUDGET	AMENDED BUDGET	CURRENT PERIOD	YEAR TO DATE BALANCE	PRIOR YEAR YTD BALANCE	TOTAL ENCUMBERED	% OF BUDGET	BUDGET BALANCE
00-GENERAL EXPENDITURES								
SALARIES & BENEFITS								
04-500-050 MISCELLANEOUS	0	0	0.00	0.00	0.00	0.00	0.00	0.00
TOTAL SALARIES & BENEFITS	0	0	0.00	0.00	0.00	0.00	0.00	0.00
CAPITAL EXPENSES								
04-500-800 CAPITAL EXPENDITURES	0	0	0.00	0.00	0.00	0.00	0.00	0.00
TOTAL CAPITAL EXPENSES	0	0	0.00	0.00	0.00	0.00	0.00	0.00
TOTAL 00-GENERAL EXPENDITURES	0	0	0.00	0.00	0.00	0.00	0.00	0.00
TOTAL EXPENDITURES	0	0	0.00	0.00	0.00	0.00	0.00	0.00
REVENUE OVER/(UNDER) EXPENDITURES	0	0	1.03	6.47	7.76	0.00	0.00	(6.47)

06 -SCHOOL CROSSING GUARD

ACCOUNT #	ACCOUNT DESCRIPTION	BALANCE		
ASSETS				
======				
06-1102	CLAIM ON CASH	17,506.39		
06-1105	SAVINGS	16,076.86		
06-1115	INVESTMENTS	0.00		
06-1315	DUE FROM GENERAL FUND	0.00		
06-1515	A/R-ACCRUED INTEREST	0.00		
06-1550	A/R-MISCELLANEOUS	0.00		
			33,583.25	
	TOTAL ASSETS			33,583.25
				==========
LIABILITIES				
==========				
06-2315	DUE TO GENERAL FUND	0.00		
06-2400	A/P PENDING	0.00		
	TOTAL LIABILITIES		0.00	
EQUITY				
======				
06-3201	FUND BALANCE-RESTRICTED	29,678.67		
	TOTAL BEGINNING EQUITY	29,678.67		
	TOTAL REVENUE	3,958.54		
	TOTAL EXPENSES	53.96		
	TOTAL INCREASE/(DECREASE) IN FUND BAL.	3,904.58		
	TOTAL EQUITY & FUND BALANCE		33,583.25	
	TOTAL LIABILITIES, EQUITY & FUND BALANCE			33,583.25
				==========

REVENUE & EXPENSE REPORT (UNAUDITED)
AS OF: MARCH 31ST, 2025

06 -SCHOOL CROSSING GUARD

% OF YEAR COMPLETED: 50.00

	ORIGINAL BUDGET	AMENDED BUDGET	CURRENT PERIOD	YEAR TO DATE BALANCE	PRIOR YEAR YTD BALANCE	TOTAL ENCUMBERED	% OF BUDGET	BUDGET BALANCE
REVENUE SUMMARY								
ALL REVENUES	7,170	7,170	698.70	3,958.54	3,094.31	0.00	55.21	3,211.06
TOTAL REVENUES	7,170	7,170	698.70	3,958.54	3,094.31	0.00	55.21	3,211.06
EXPENDITURE SUMMARY								
00-GENERAL EXPENDITURES								
SALARIES & BENEFITS	5,000	5,000	34.37	53.96	2,074.22	1,472.00	30.52	3,474.04
CAPITAL EXPENSES	15,000	15,000	0.00	0.00	13,139.00	0.00	0.00	15,000.00
TOTAL 00-GENERAL EXPENDITURES	20,000	20,000	34.37	53.96	15,213.22	1,472.00	7.63	18,474.04
TOTAL EXPENDITURES	20,000	20,000	34.37	53.96	15,213.22	1,472.00	7.63	18,474.04
REVENUE OVER/(UNDER) EXPENDITURES	(12,830)	(12,830)	664.33	3,904.58	(12,118.91)	(1,472.00)	18.96-	(15,262.98)

REVENUE & EXPENSE REPORT (UNAUDITED)
AS OF: MARCH 31ST, 2025

06 -SCHOOL CROSSING GUARD

% OF YEAR COMPLETED: 50.00

REVENUES	ORIGINAL BUDGET	AMENDED BUDGET	CURRENT PERIOD	YEAR TO DATE BALANCE	PRIOR YEAR YTD BALANCE	TOTAL ENCUMBERED	% OF BUDGET	BUDGET BALANCE
06-4101 INCOME-BEXAR COUNTY	6,670	6,670	656.90	3,696.00	2,779.30	0.00	55.42	2,973.60
06-4115 INCOME-INTEREST	500	500	41.80	262.54	315.01	0.00	52.51	237.46
06-4310 SCHOOL ZONE FINES	0	0	0.00	0.00	0.00	0.00	0.00	0.00
TOTAL REVENUES	7,170	7,170	698.70	3,958.54	3,094.31	0.00	55.21	3,211.06

REVENUE & EXPENSE REPORT (UNAUDITED)
AS OF: MARCH 31ST, 2025

06 -SCHOOL CROSSING GUARD

% OF YEAR COMPLETED: 50.00

DEPARTMENTAL EXPENDITURES	ORIGINAL BUDGET	AMENDED BUDGET	CURRENT PERIOD	YEAR TO DATE BALANCE	PRIOR YEAR YTD BALANCE	TOTAL ENCUMBERED	% OF BUDGET	BUDGET BALANCE
00-GENERAL EXPENDITURES								
SALARIES & BENEFITS								
06-500-010 DARE PROGRAM	0	0	0.00	0.00	0.00	0.00	0.00	0.00
06-500-020 SAFETY EQUIPMENT	3,000	3,000	0.00	0.00	2,011.44	1,472.00	49.07	1,528.00
06-500-030 STREET MAINTENANCE	0	0	0.00	0.00	0.00	0.00	0.00	0.00
06-500-050 MISCELLANEOUS	2,000	2,000	34.37	53.96	62.78	0.00	2.70	1,946.04
TOTAL SALARIES & BENEFITS	5,000	5,000	34.37	53.96	2,074.22	1,472.00	30.52	3,474.04
CAPITAL EXPENSES								
06-500-800 CAPITAL EXPENDITURES	15,000	15,000	0.00	0.00	13,139.00	0.00	0.00	15,000.00
TOTAL CAPITAL EXPENSES	15,000	15,000	0.00	0.00	13,139.00	0.00	0.00	15,000.00
TOTAL 00-GENERAL EXPENDITURES	20,000	20,000	34.37	53.96	15,213.22	1,472.00	7.63	18,474.04
TOTAL EXPENDITURES	20,000	20,000	34.37	53.96	15,213.22	1,472.00	7.63	18,474.04
REVENUE OVER/(UNDER) EXPENDITURES	(12,830)	(12,830)	664.33	3,904.58	(12,118.91)	(1,472.00)	18.96-	(15,262.98)

BALANCE SHEET
AS OF: MARCH 31ST, 2025

08 -POLICE DONATIONS ACCOUNT

ACCOUNT #	ACCOUNT DESCRIPTION	BALANCE		
ASSETS				
======				
08-1102	CLAIM ON CASH	16,185.79		
08-1105	SAVINGS	1,869.05		
08-1315	DUE FROM GENERAL FUND	0.00		
			18,054.84	
	TOTAL ASSETS			18,054.84
				==========
LIABILITIES				
==========				
08-2315	DUE TO GENERAL FUND	0.00		
08-2400	A/P PENDING	0.00		
	TOTAL LIABILITIES		0.00	
EQUITY				
======				
08-3201	FUND BALANCE	15,995.51		
	TOTAL BEGINNING EQUITY	15,995.51		
	TOTAL REVENUE	5,630.52		
	TOTAL EXPENSES	3,571.19		
	TOTAL INCREASE/(DECREASE) IN FUND BAL.	2,059.33		
	TOTAL EQUITY & FUND BALANCE		18,054.84	
	TOTAL LIABILITIES, EQUITY & FUND BALANCE			18,054.84
				==========

REVENUE & EXPENSE REPORT (UNAUDITED)
AS OF: MARCH 31ST, 2025

08 -POLICE DONATIONS ACCOUNT

% OF YEAR COMPLETED: 50.00

	ORIGINAL BUDGET	AMENDED BUDGET	CURRENT PERIOD	YEAR TO DATE BALANCE	PRIOR YEAR YTD BALANCE	TOTAL ENCUMBERED	% OF BUDGET	BUDGET BALANCE
REVENUE SUMMARY								
ALL REVENUES	1,000	1,000	304.86	5,630.52	2,576.63	0.00	563.05	(4,630.52)
TOTAL REVENUES	1,000	1,000	304.86	5,630.52	2,576.63	0.00	563.05	(4,630.52)
EXPENDITURE SUMMARY								
00-GENERAL EXPENDITURES								
SALARIES & BENEFITS	15,000	15,000	0.00	3,571.19	3,069.34	414.98	26.57	11,013.83
OTHER EXPENSES	1,000	1,000	0.00	0.00	0.00	0.00	0.00	1,000.00
CAPITAL EXPENSES	0	0	0.00	0.00	0.00	0.00	0.00	0.00
TOTAL 00-GENERAL EXPENDITURES	16,000	16,000	0.00	3,571.19	3,069.34	414.98	24.91	12,013.83
TOTAL EXPENDITURES	16,000	16,000	0.00	3,571.19	3,069.34	414.98	24.91	12,013.83
REVENUE OVER/(UNDER) EXPENDITURES	(15,000)	(15,000)	304.86	2,059.33	(492.71)	(414.98)	10.96-	(16,644.35)

REVENUE & EXPENSE REPORT (UNAUDITED)
AS OF: MARCH 31ST, 2025

08 -POLICE DONATIONS ACCOUNT

% OF YEAR COMPLETED: 50.00

REVENUES	ORIGINAL BUDGET	AMENDED BUDGET	CURRENT PERIOD	YEAR TO DATE BALANCE	PRIOR YEAR YTD BALANCE	TOTAL ENCUMBERED	% OF BUDGET	BUDGET BALANCE
08-4101 INCOME-POLICE DONATIONS	1,000	1,000	300.00	5,600.00	2,540.00	0.00	560.00	(4,600.00)
08-4102 INCOME-WINDCREST PROUD	0	0	0.00	0.00	0.00	0.00	0.00	0.00
08-4106 INCOME-SWIM TEAM DONATIONS	0	0	0.00	0.00	0.00	0.00	0.00	0.00
08-4115 INCOME-INTEREST	0	0	4.86	30.52	36.63	0.00	0.00	(30.52)
TOTAL REVENUES	1,000	1,000	304.86	5,630.52	2,576.63	0.00	563.05	(4,630.52)

REVENUE & EXPENSE REPORT (UNAUDITED)
AS OF: MARCH 31ST, 2025

08 -POLICE DONATIONS ACCOUNT

% OF YEAR COMPLETED: 50.00

DEPARTMENTAL EXPENDITURES	ORIGINAL BUDGET	AMENDED BUDGET	CURRENT PERIOD	YEAR TO DATE BALANCE	PRIOR YEAR YTD BALANCE	TOTAL ENCUMBERED	% OF BUDGET	BUDGET BALANCE
00-GENERAL EXPENDITURES								
SALARIES & BENEFITS								
08-500-010 MISCELLANEOUS EXPENSES	15,000	15,000	0.00	3,571.19	3,069.34	414.98	26.57	11,013.83
TOTAL SALARIES & BENEFITS	15,000	15,000	0.00	3,571.19	3,069.34	414.98	26.57	11,013.83
OTHER EXPENSES								
08-500-431 EMPLOYEE APPRECIATION LUNCHE	1,000	1,000	0.00	0.00	0.00	0.00	0.00	1,000.00
TOTAL OTHER EXPENSES	1,000	1,000	0.00	0.00	0.00	0.00	0.00	1,000.00
CAPITAL EXPENSES								
08-500-800 CAPITAL EXPENDITURES	0	0	0.00	0.00	0.00	0.00	0.00	0.00
TOTAL CAPITAL EXPENSES	0	0	0.00	0.00	0.00	0.00	0.00	0.00
TOTAL 00-GENERAL EXPENDITURES	16,000	16,000	0.00	3,571.19	3,069.34	414.98	24.91	12,013.83
TOTAL EXPENDITURES	16,000	16,000	0.00	3,571.19	3,069.34	414.98	24.91	12,013.83
REVENUE OVER/(UNDER) EXPENDITURES	(15,000)	(15,000)	304.86	2,059.33	(492.71)	(414.98)	10.96-	(16,644.35)

BALANCE SHEET
AS OF: MARCH 31ST, 2025

09 -ASSET SEIZURE FUND- STATE

ACCOUNT #	ACCOUNT DESCRIPTION	BALANCE		
ASSETS				
======				
09-1102	CLAIM ON CASH	27,372.57		
09-1105	SAVINGS	438.14		
09-1115	INVESTMENTS	0.00		
09-1315	DUE FROM GENERAL FUND	0.00		
09-1515	A/R-ACCRUED INTEREST	0.00		
09-1550	A/R-MISCELLANEOUS	0.00		
			27,810.71	
	TOTAL ASSETS			27,810.71
				==========
LIABILITIES				
==========				
09-2315	DUE TO GENERAL FUND	0.00		
09-2400	A/P PENDING	0.00		
	TOTAL LIABILITIES		0.00	
EQUITY				
======				
09-3201	FUND BALANCE	27,546.22		
	TOTAL BEGINNING EQUITY	27,546.22		
	TOTAL REVENUE	264.49		
	TOTAL EXPENSES	0.00		
	TOTAL INCREASE/(DECREASE) IN FUND BAL.	264.49		
	TOTAL EQUITY & FUND BALANCE		27,810.71	
	TOTAL LIABILITIES, EQUITY & FUND BALANCE			27,810.71
				==========

REVENUE & EXPENSE REPORT (UNAUDITED)
AS OF: MARCH 31ST, 2025

09 -ASSET SEIZURE FUND- STATE

% OF YEAR COMPLETED: 50.00

DEPARTMENTAL EXPENDITURES	ORIGINAL BUDGET	AMENDED BUDGET	CURRENT PERIOD	YEAR TO DATE BALANCE	PRIOR YEAR YTD BALANCE	TOTAL ENCUMBERED	% OF BUDGET	BUDGET BALANCE
00-GENERAL EXPENDITURES								
SALARIES & BENEFITS								
09-500-050 MISCELLANEOUS	0	0	0.00	0.00	0.00	0.00	0.00	0.00
TOTAL SALARIES & BENEFITS	0	0	0.00	0.00	0.00	0.00	0.00	0.00
CAPITAL EXPENSES								
09-500-800 CAPITAL EXPENDITURES	0	0	0.00	0.00	0.00	0.00	0.00	0.00
TOTAL CAPITAL EXPENSES	0	0	0.00	0.00	0.00	0.00	0.00	0.00
TOTAL 00-GENERAL EXPENDITURES	0	0	0.00	0.00	0.00	0.00	0.00	0.00
TOTAL EXPENDITURES	0	0	0.00	0.00	0.00	0.00	0.00	0.00
REVENUE OVER/(UNDER) EXPENDITURES	0	0	1.14	264.49	8.59	0.00	0.00	(264.49)

BALANCE SHEET
AS OF: MARCH 31ST, 2025

10 -POLICE EDUCATION TRAINING

ACCOUNT #	ACCOUNT DESCRIPTION	BALANCE		
ASSETS				
======				
10-1102	CLAIM ON CASH	0.00		
10-1105	SAVINGS	11,511.29		
10-1115	INVESTMENTS	0.00		
10-1315	DUE FROM GENERAL FUND	0.00		
10-1515	A/R ACCRUED INTEREST	0.00		
10-1550	A/R-MISCELLANEOUS	0.00		
10-1601	A/R-MISCELLANEOUS INCOME	0.00		
			11,511.29	
	TOTAL ASSETS			11,511.29
				==========
LIABILITIES				
==========				
10-2315	DUE TO GENERAL FUND	0.00		
10-2400	A/P PENDING	0.00		
	TOTAL LIABILITIES		0.00	
EQUITY				
======				
10-3201	FUND BALANCE	9,028.68		
	TOTAL BEGINNING EQUITY	9,028.68		
	TOTAL REVENUE	2,607.61		
	TOTAL EXPENSES	125.00		
	TOTAL INCREASE/(DECREASE) IN FUND BAL.	2,482.61		
	TOTAL EQUITY & FUND BALANCE		11,511.29	
	TOTAL LIABILITIES, EQUITY & FUND BALANCE			11,511.29
				==========

REVENUE & EXPENSE REPORT (UNAUDITED)
AS OF: MARCH 31ST, 2025

10 -POLICE EDUCATION TRAINING

% OF YEAR COMPLETED: 50.00

	ORIGINAL BUDGET	AMENDED BUDGET	CURRENT PERIOD	YEAR TO DATE BALANCE	PRIOR YEAR YTD BALANCE	TOTAL ENCUMBERED	% OF BUDGET	BUDGET BALANCE
REVENUE SUMMARY								
ALL REVENUES	1,000	1,000	29.93	2,607.61	5,144.32	0.00	260.76	(1,607.61)
TOTAL REVENUES	1,000	1,000	29.93	2,607.61	5,144.32	0.00	260.76	(1,607.61)
EXPENDITURE SUMMARY								
00-GENERAL EXPENDITURES								
SALARIES & BENEFITS	5,000	5,000	0.00	125.00	2,083.61	0.00	2.50	4,875.00
CAPITAL EXPENSES	0	0	0.00	0.00	0.00	0.00	0.00	0.00
TOTAL 00-GENERAL EXPENDITURES	5,000	5,000	0.00	125.00	2,083.61	0.00	2.50	4,875.00
TOTAL EXPENDITURES	5,000	5,000	0.00	125.00	2,083.61	0.00	2.50	4,875.00
REVENUE OVER/(UNDER) EXPENDITURES	(4,000)	(4,000)	29.93	2,482.61	3,060.71	0.00	62.07-	(6,482.61)

REVENUE & EXPENSE REPORT (UNAUDITED)
AS OF: MARCH 31ST, 2025

10 -POLICE EDUCATION TRAINING

% OF YEAR COMPLETED: 50.00

REVENUES	ORIGINAL BUDGET	AMENDED BUDGET	CURRENT PERIOD	YEAR TO DATE BALANCE	PRIOR YEAR YTD BALANCE	TOTAL ENCUMBERED	% OF BUDGET	BUDGET BALANCE
10-4101 INCOME-LEOSE	0	0	0.00	2,451.07	4,983.84	0.00	0.00	(2,451.07)
10-4105 INCOME- OTHER	1,000	1,000	0.00	0.00	0.00	0.00	0.00	1,000.00
10-4115 INCOME-INTEREST	0	0	29.93	156.54	160.48	0.00	0.00	(156.54)
TOTAL REVENUES	1,000	1,000	29.93	2,607.61	5,144.32	0.00	260.76	(1,607.61)

REVENUE & EXPENSE REPORT (UNAUDITED)
AS OF: MARCH 31ST, 2025

10 -POLICE EDUCATION TRAINING

% OF YEAR COMPLETED: 50.00

DEPARTMENTAL EXPENDITURES	ORIGINAL BUDGET	AMENDED BUDGET	CURRENT PERIOD	YEAR TO DATE BALANCE	PRIOR YEAR YTD BALANCE	TOTAL ENCUMBERED	% OF BUDGET	BUDGET BALANCE
00-GENERAL EXPENDITURES								
SALARIES & BENEFITS								
10-500-050 EDUCATION/TRAINING	5,000	5,000	0.00	125.00	2,083.61	0.00	2.50	4,875.00
TOTAL SALARIES & BENEFITS	5,000	5,000	0.00	125.00	2,083.61	0.00	2.50	4,875.00
CAPITAL EXPENSES								
10-500-800 CAPITAL EXPENDITURES	0	0	0.00	0.00	0.00	0.00	0.00	0.00
TOTAL CAPITAL EXPENSES	0	0	0.00	0.00	0.00	0.00	0.00	0.00
TOTAL 00-GENERAL EXPENDITURES	5,000	5,000	0.00	125.00	2,083.61	0.00	2.50	4,875.00
TOTAL EXPENDITURES	5,000	5,000	0.00	125.00	2,083.61	0.00	2.50	4,875.00
REVENUE OVER/(UNDER) EXPENDITURES	(4,000)	(4,000)	29.93	2,482.61	3,060.71	0.00	62.07-	(6,482.61)

BALANCE SHEET

AS OF: MARCH 31ST, 2025

14 -COURT TECHNOLOGY FUND

ACCOUNT #	ACCOUNT DESCRIPTION	BALANCE		
ASSETS				
======				
14-1102	CLAIM ON CASH	54,435.11		
14-1105	CASH - SAVINGS	23,768.64		
14-1315	DUE FROM GENERAL FUND	0.00		
			78,203.75	
	TOTAL ASSETS			78,203.75
				==========
LIABILITIES				
==========				
14-2315	DUE TO GENERAL FUND	0.00		
14-2400	A/P PENDING	0.00		
	TOTAL LIABILITIES		0.00	
EQUITY				
======				
14-3201	FUND BALANCE	68,735.77		
	TOTAL BEGINNING EQUITY	68,735.77		
	TOTAL REVENUE	13,016.88		
	TOTAL EXPENSES	3,548.90		
	TOTAL INCREASE/(DECREASE) IN FUND BAL.	9,467.98		
	TOTAL EQUITY & FUND BALANCE		78,203.75	
	TOTAL LIABILITIES, EQUITY & FUND BALANCE			78,203.75
				==========

REVENUE & EXPENSE REPORT (UNAUDITED)
AS OF: MARCH 31ST, 2025

14 -COURT TECHNOLOGY FUND

% OF YEAR COMPLETED: 50.00

	ORIGINAL BUDGET	AMENDED BUDGET	CURRENT PERIOD	YEAR TO DATE BALANCE	PRIOR YEAR YTD BALANCE	TOTAL ENCUMBERED	% OF BUDGET	BUDGET BALANCE
REVENUE SUMMARY								
ALL REVENUES	24,842	24,842	2,561.38	13,016.88	12,925.25	0.00	52.40	11,825.12
TOTAL REVENUES	24,842	24,842	2,561.38	13,016.88	12,925.25	0.00	52.40	11,825.12
EXPENDITURE SUMMARY								
00-GENERAL EXPENDITURES								
SALARIES & BENEFITS	9,000	9,000	1,968.05	3,548.90	4,585.78	0.00	39.43	5,451.10
CAPITAL EXPENSES	0	0	0.00	0.00	129.32	0.00	0.00	0.00
TOTAL 00-GENERAL EXPENDITURES	9,000	9,000	1,968.05	3,548.90	4,715.10	0.00	39.43	5,451.10
TOTAL EXPENDITURES	9,000	9,000	1,968.05	3,548.90	4,715.10	0.00	39.43	5,451.10
REVENUE OVER/(UNDER) EXPENDITURES	15,842	15,842	593.33	9,467.98	8,210.15	0.00	59.77	6,374.02

REVENUE & EXPENSE REPORT (UNAUDITED)
AS OF: MARCH 31ST, 2025

14 -COURT TECHNOLOGY FUND

% OF YEAR COMPLETED: 50.00

REVENUES	ORIGINAL BUDGET	AMENDED BUDGET	CURRENT PERIOD	YEAR TO DATE BALANCE	PRIOR YEAR YTD BALANCE	TOTAL ENCUMBERED	% OF BUDGET	BUDGET BALANCE
14-4101 INCOME-COURT TECHNOLOGY FEES	24,142	24,142	2,499.59	12,628.74	12,459.52	0.00	52.31	11,513.26
14-4115 INCOME - INTEREST	700	700	61.79	388.14	465.73	0.00	55.45	311.86
TOTAL REVENUES	24,842	24,842	2,561.38	13,016.88	12,925.25	0.00	52.40	11,825.12

REVENUE & EXPENSE REPORT (UNAUDITED)
AS OF: MARCH 31ST, 2025

14 -COURT TECHNOLOGY FUND

% OF YEAR COMPLETED: 50.00

DEPARTMENTAL EXPENDITURES	ORIGINAL BUDGET	AMENDED BUDGET	CURRENT PERIOD	YEAR TO DATE BALANCE	PRIOR YEAR YTD BALANCE	TOTAL ENCUMBERED	% OF BUDGET	BUDGET BALANCE
00-GENERAL EXPENDITURES								
SALARIES & BENEFITS								
14-500-050 MISCELLANEOUS	9,000	9,000	1,968.05	3,548.90	4,585.78	0.00	39.43	5,451.10
TOTAL SALARIES & BENEFITS	9,000	9,000	1,968.05	3,548.90	4,585.78	0.00	39.43	5,451.10
CAPITAL EXPENSES								
14-500-800 CAPITAL EXPENDITURES	0	0	0.00	0.00	129.32	0.00	0.00	0.00
TOTAL CAPITAL EXPENSES	0	0	0.00	0.00	129.32	0.00	0.00	0.00
TOTAL 00-GENERAL EXPENDITURES	9,000	9,000	1,968.05	3,548.90	4,715.10	0.00	39.43	5,451.10
TOTAL EXPENDITURES	9,000	9,000	1,968.05	3,548.90	4,715.10	0.00	39.43	5,451.10
REVENUE OVER/(UNDER) EXPENDITURES	15,842	15,842	593.33	9,467.98	8,210.15	0.00	59.77	6,374.02

CITY OF WINDCREST
BALANCE SHEET
AS OF: MARCH 31ST, 2025

15 -COURT BLDG. SECURITY FUND

ACCOUNT #	ACCOUNT DESCRIPTION	BALANCE		
ASSETS				
======				
15-1102	CLAIM ON CASH	95,562.04		
15-1105	CASH - SAVINGS	807.54		
15-1315	DUE FROM GENERAL FUND	0.00		
			96,369.58	
	TOTAL ASSETS			96,369.58
				==========
LIABILITIES				
==========				
15-2315	DUE TO GENERAL FUND	0.00		
15-2400	A/P PENDING	0.00		
15-2451	A/P CAPITAL	0.00		
	TOTAL LIABILITIES		0.00	
EQUITY				
======				
15-3201	FUND BALANCE	81,169.51		
	TOTAL BEGINNING EQUITY	81,169.51		
	TOTAL REVENUE	15,200.07		
	TOTAL EXPENSES	0.00		
	TOTAL INCREASE/(DECREASE) IN FUND BAL.	15,200.07		
	TOTAL EQUITY & FUND BALANCE		96,369.58	
	TOTAL LIABILITIES, EQUITY & FUND BALANCE			96,369.58
				==========

REVENUE & EXPENSE REPORT (UNAUDITED)
AS OF: MARCH 31ST, 2025

15 -COURT BLDG. SECURITY FUND

% OF YEAR COMPLETED: 50.00

	ORIGINAL BUDGET	AMENDED BUDGET	CURRENT PERIOD	YEAR TO DATE BALANCE	PRIOR YEAR YTD BALANCE	TOTAL ENCUMBERED	% OF BUDGET	BUDGET BALANCE
REVENUE SUMMARY								
ALL REVENUES	29,154	29,154	3,007.93	15,200.07	15,043.75	0.00	52.14	13,953.93
TOTAL REVENUES	29,154	29,154	3,007.93	15,200.07	15,043.75	0.00	52.14	13,953.93
EXPENDITURE SUMMARY								
00-GENERAL EXPENDITURES								
SALARIES & BENEFITS	2,500	2,500	0.00	0.00	0.00	0.00	0.00	2,500.00
CAPITAL EXPENSES	0	0	0.00	0.00	0.00	0.00	0.00	0.00
TOTAL 00-GENERAL EXPENDITURES	2,500	2,500	0.00	0.00	0.00	0.00	0.00	2,500.00
TOTAL EXPENDITURES	2,500	2,500	0.00	0.00	0.00	0.00	0.00	2,500.00
REVENUE OVER/(UNDER) EXPENDITURES	26,654	26,654	3,007.93	15,200.07	15,043.75	0.00	57.03	11,453.93

REVENUE & EXPENSE REPORT (UNAUDITED)
AS OF: MARCH 31ST, 2025

15 -COURT BLDG. SECURITY FUND

% OF YEAR COMPLETED: 50.00

REVENUES	ORIGINAL BUDGET	AMENDED BUDGET	CURRENT PERIOD	YEAR TO DATE BALANCE	PRIOR YEAR YTD BALANCE	TOTAL ENCUMBERED	% OF BUDGET	BUDGET BALANCE
15-4101 INCOME-COURT BLDG SECURITY FEE	29,128	29,128	3,005.83	15,186.89	15,027.93	0.00	52.14	13,941.11
15-4115 INCOME - INTEREST	26	26	2.10	13.18	15.82	0.00	50.69	12.82
15-4120 TRANSFER FROM GENERAL FUND	0	0	0.00	0.00	0.00	0.00	0.00	0.00
TOTAL REVENUES	29,154	29,154	3,007.93	15,200.07	15,043.75	0.00	52.14	13,953.93

REVENUE & EXPENSE REPORT (UNAUDITED)
AS OF: MARCH 31ST, 2025

15 -COURT BLDG. SECURITY FUND

% OF YEAR COMPLETED: 50.00

DEPARTMENTAL EXPENDITURES	ORIGINAL BUDGET	AMENDED BUDGET	CURRENT PERIOD	YEAR TO DATE BALANCE	PRIOR YEAR YTD BALANCE	TOTAL ENCUMBERED	% OF BUDGET	BUDGET BALANCE
00-GENERAL EXPENDITURES								
SALARIES & BENEFITS								
15-500-050 MISCELLANEOUS	2,500	2,500	0.00	0.00	0.00	0.00	0.00	2,500.00
TOTAL SALARIES & BENEFITS	2,500	2,500	0.00	0.00	0.00	0.00	0.00	2,500.00
CAPITAL EXPENSES								
15-500-800 CAPITAL EXPENDITURES	0	0	0.00	0.00	0.00	0.00	0.00	0.00
TOTAL CAPITAL EXPENSES	0	0	0.00	0.00	0.00	0.00	0.00	0.00
TOTAL 00-GENERAL EXPENDITURES	2,500	2,500	0.00	0.00	0.00	0.00	0.00	2,500.00
TOTAL EXPENDITURES	2,500	2,500	0.00	0.00	0.00	0.00	0.00	2,500.00
REVENUE OVER/(UNDER) EXPENDITURES	26,654	26,654	3,007.93	15,200.07	15,043.75	0.00	57.03	11,453.93

CITY OF WINDCREST
BALANCE SHEET
AS OF: MARCH 31ST, 2025

16 -HOTEL/MOTEL TAX FUND

ACCOUNT #	ACCOUNT DESCRIPTION	BALANCE		
ASSETS				
16-1102	CLAIM ON CASH	89,635.72		
16-1105	SAVINGS	180,278.76		
16-1115	INVESTMENTS	0.00		
16-1315	DUE FROM GENERAL FUND	0.00		
16-1357	DUE FROM TEXAS TAX NOTE FUND	0.00		
16-1515	A/R - ACCRUED INTEREST	0.00		
16-1550	A/R - MISCELLANEOUS	0.00		
			269,914.48	
	TOTAL ASSETS			269,914.48
LIABILITIES				
16-2315	DUE TO GENERAL FUND	0.00		
16-2357	DUE TO TEXAS TAX NOTES FUND	0.00		
16-2375	DUE TO EDC FUND	0.00		
16-2400	A/P PENDING	0.00		
	TOTAL LIABILITIES		0.00	
EQUITY				
16-3201	FUND BALANCE	344,129.55		
	TOTAL BEGINNING EQUITY	344,129.55		
	TOTAL REVENUE	131,779.73		
	TOTAL EXPENSES	205,994.80		
	TOTAL INCREASE/(DECREASE) IN FUND BAL.	(74,215.07)		
	TOTAL EQUITY & FUND BALANCE		269,914.48	
	TOTAL LIABILITIES, EQUITY & FUND BALANCE			269,914.48

REVENUE & EXPENSE REPORT (UNAUDITED)
AS OF: MARCH 31ST, 2025

16 -HOTEL/MOTEL TAX FUND

% OF YEAR COMPLETED: 50.00

	ORIGINAL BUDGET	AMENDED BUDGET	CURRENT PERIOD	YEAR TO DATE BALANCE	PRIOR YEAR YTD BALANCE	TOTAL ENCUMBERED	% OF BUDGET	BUDGET BALANCE
REVENUE SUMMARY								
ALL REVENUES	342,696	342,696	32,694.78	131,779.73	124,469.46	0.00	38.45	210,915.97
TOTAL REVENUES	342,696	342,696	32,694.78	131,779.73	124,469.46	0.00	38.45	210,915.97
EXPENDITURE SUMMARY								
00-GENERAL EXPENDITURES								
SALARIES & BENEFITS	3,500	3,500	168.10	994.80	327.00	0.00	28.42	2,505.20
OTHER EXPENSES	300,000	300,000	205,000.00	205,000.00	0.00	0.00	68.33	95,000.00
CAPITAL EXPENSES	0	0	0.00	0.00	0.00	0.00	0.00	0.00
TOTAL 00-GENERAL EXPENDITURES	303,500	303,500	205,168.10	205,994.80	327.00	0.00	67.87	97,505.20
TOTAL EXPENDITURES	303,500	303,500	205,168.10	205,994.80	327.00	0.00	67.87	97,505.20
REVENUE OVER/(UNDER) EXPENDITURES	39,196	39,196	(172,473.32)	(74,215.07)	124,142.46	0.00	189.34-	113,410.77

REVENUE & EXPENSE REPORT (UNAUDITED)
AS OF: MARCH 31ST, 2025

16 -HOTEL/MOTEL TAX FUND

% OF YEAR COMPLETED: 50.00

REVENUES	ORIGINAL BUDGET	AMENDED BUDGET	CURRENT PERIOD	YEAR TO DATE BALANCE	PRIOR YEAR YTD BALANCE	TOTAL ENCUMBERED	% OF BUDGET	BUDGET BALANCE
16-4101 INCOME-HOT	339,696	339,696	31,743.12	126,314.30	118,333.10	0.00	37.18	213,381.40
16-4105 INCOME-OTHER	0	0	0.00	0.00	0.00	0.00	0.00	0.00
16-4115 INCOME-INTEREST	3,000	3,000	951.66	5,465.43	6,136.36	0.00	182.18	(2,465.43)
TOTAL REVENUES	342,696	342,696	32,694.78	131,779.73	124,469.46	0.00	38.45	210,915.97

REVENUE & EXPENSE REPORT (UNAUDITED)
AS OF: MARCH 31ST, 2025

16 -HOTEL/MOTEL TAX FUND

% OF YEAR COMPLETED: 50.00

DEPARTMENTAL EXPENDITURES	ORIGINAL BUDGET	AMENDED BUDGET	CURRENT PERIOD	YEAR TO DATE BALANCE	PRIOR YEAR YTD BALANCE	TOTAL ENCUMBERED	% OF BUDGET	BUDGET BALANCE
00-GENERAL EXPENDITURES								
SALARIES & BENEFITS								
16-500-040 ADVERTISING & PROMOTION	0	0	0.00	0.00	0.00	0.00	0.00	0.00
16-500-050 MISCELLANEOUS	3,500	3,500	168.10	994.80	327.00	0.00	28.42	2,505.20
TOTAL SALARIES & BENEFITS	3,500	3,500	168.10	994.80	327.00	0.00	28.42	2,505.20
OTHER EXPENSES								
16-500-501 TRANSFER TO GENERAL FUND	300,000	300,000	35,000.00	35,000.00	0.00	0.00	11.67	265,000.00
16-500-502 TRANSFER TO GENERAL FUND	0	0	170,000.00	170,000.00	0.00	0.00	0.00	(170,000.00)
16-500-503 TRANSFER TO GENERAL FUND	0	0	0.00	0.00	0.00	0.00	0.00	0.00
TOTAL OTHER EXPENSES	300,000	300,000	205,000.00	205,000.00	0.00	0.00	68.33	95,000.00
CAPITAL EXPENSES								
16-500-800 CAPITAL EXPENDITURES	0	0	0.00	0.00	0.00	0.00	0.00	0.00
TOTAL CAPITAL EXPENSES	0	0	0.00	0.00	0.00	0.00	0.00	0.00
TOTAL 00-GENERAL EXPENDITURES	303,500	303,500	205,168.10	205,994.80	327.00	0.00	67.87	97,505.20
TOTAL EXPENDITURES	303,500	303,500	205,168.10	205,994.80	327.00	0.00	67.87	97,505.20
REVENUE OVER/(UNDER) EXPENDITURES	39,196	39,196	(172,473.32)	(74,215.07)	124,142.46	0.00	189.34-	113,410.77

BALANCE SHEET

AS OF: MARCH 31ST, 2025

17 -DEBT SERVICE

ACCOUNT #	ACCOUNT DESCRIPTION	BALANCE		
ASSETS				
======				
17-1102	CLAIM ON CASH	145,602.40		
17-1105	SAVINGS	0.00		
17-1115	INVESTMENTS	0.00		
17-1315	DUE FROM GENERAL FUND	0.00		
17-1316	DUE FROM 2019A BOND	0.00		
17-1356	DUE FROM HOTEL/MOTEL TAX FND	0.00		
17-1501	A/R - ADVALOREM TAXES	23,121.55		
17-1505	ALLOW FOR DOUBTFUL ACCTS	(3,468.23)		
17-1515	A/R - ACCRUED INTEREST	0.00		
17-1550	A/R - MISCELLANEOUS	598.36		
			165,854.08	
	TOTAL ASSETS			165,854.08
				==========
LIABILITIES				
==========				
17-2315	DUE TO GENERAL FUND	0.00		
17-2316	ACCRUED INTEREST	0.00		
17-2356	DUE TO HOTEL/MOTEL TAX FUND	0.00		
17-2400	A/P PENDING	0.00		
17-2501	DEFFERED REVENUE - TAXES	19,105.35		
	TOTAL LIABILITIES		19,105.35	
EQUITY				
======				
17-3201	FUND BALANCE	36,577.51		
	TOTAL BEGINNING EQUITY	36,577.51		
	TOTAL REVENUE	636,296.22		
	TOTAL EXPENSES	526,125.00		
	TOTAL INCREASE/(DECREASE) IN FUND BAL.	110,171.22		
	TOTAL EQUITY & FUND BALANCE		146,748.73	
	TOTAL LIABILITIES, EQUITY & FUND BALANCE			165,854.08
				==========

REVENUE & EXPENSE REPORT (UNAUDITED)
AS OF: MARCH 31ST, 2025

17 -DEBT SERVICE

% OF YEAR COMPLETED: 50.00

	ORIGINAL BUDGET	AMENDED BUDGET	CURRENT PERIOD	YEAR TO DATE BALANCE	PRIOR YEAR YTD BALANCE	TOTAL ENCUMBERED	% OF BUDGET	BUDGET BALANCE
REVENUE SUMMARY								
ALL REVENUES	665,000	665,000	54,906.09	636,296.22	540,457.73	0.00	95.68	28,703.78
TOTAL REVENUES	665,000	665,000	54,906.09	636,296.22	540,457.73	0.00	95.68	28,703.78
EXPENDITURE SUMMARY								
00-GENERAL EXPENDITURES								
OTHER EXPENSES	662,750	662,750	0.00	526,125.00	515,125.00	0.00	79.39	136,625.00
TOTAL 00-GENERAL EXPENDITURES	662,750	662,750	0.00	526,125.00	515,125.00	0.00	79.39	136,625.00
TOTAL EXPENDITURES	662,750	662,750	0.00	526,125.00	515,125.00	0.00	79.39	136,625.00
REVENUE OVER/(UNDER) EXPENDITURES	2,250	2,250	54,906.09	110,171.22	25,332.73	0.00	4,896.50	(107,921.22)

REVENUE & EXPENSE REPORT (UNAUDITED)
AS OF: MARCH 31ST, 2025

17 -DEBT SERVICE

% OF YEAR COMPLETED: 50.00

REVENUES	ORIGINAL BUDGET	AMENDED BUDGET	CURRENT PERIOD	YEAR TO DATE BALANCE	PRIOR YEAR YTD BALANCE	TOTAL ENCUMBERED	% OF BUDGET	BUDGET BALANCE
17-4101 INCOME - TAX NOTES PROCEEDS	0	0	0.00	0.00	0.00	0.00	0.00	0.00
17-4105 INCOME - OTHER	0	0	0.00	0.00	0.00	0.00	0.00	0.00
17-4115 INCOME - INTEREST	0	0	0.00	0.00	0.00	0.00	0.00	0.00
17-4116 INCOME - SALES TAX (.25)	0	0	0.00	0.00	0.00	0.00	0.00	0.00
17-4117 AD VALOREM TAX (I&S)	665,000	665,000	54,906.09	636,296.22	540,457.73	0.00	95.68	28,703.78
TOTAL REVENUES	665,000	665,000	54,906.09	636,296.22	540,457.73	0.00	95.68	28,703.78

REVENUE & EXPENSE REPORT (UNAUDITED)
AS OF: MARCH 31ST, 2025

17 -DEBT SERVICE

% OF YEAR COMPLETED: 50.00

DEPARTMENTAL EXPENDITURES	ORIGINAL BUDGET	AMENDED BUDGET	CURRENT PERIOD	YEAR TO DATE BALANCE	PRIOR YEAR YTD BALANCE	TOTAL ENCUMBERED	% OF BUDGET	BUDGET BALANCE
00-GENERAL EXPENDITURES								
OTHER EXPENSES								
17-500-211 GO SERIES 2019 A PRINCIPAL E	270,000	270,000	0.00	270,000.00	255,000.00	0.00	100.00	0.00
17-500-212 GO SERIES 2019 A INTEREST EX	226,800	226,800	0.00	116,775.00	123,150.00	0.00	51.49	110,025.00
17-500-213 GO SERIES 2019 B PRINCIPAL E	110,000	110,000	0.00	110,000.00	105,000.00	0.00	100.00	0.00
17-500-214 GO SERIES 2019 B INTEREST EX	55,950	55,950	0.00	29,350.00	31,975.00	0.00	52.46	26,600.00
17-500-351 GO SERIES 2019 A ISSUANCE CO	0	0	0.00	0.00	0.00	0.00	0.00	0.00
17-500-352 GO SERIES 2019 B ISSUANCE CO	0	0	0.00	0.00	0.00	0.00	0.00	0.00
17-500-400 PAY AGENT/REGISTRAR FEES	0	0	0.00	0.00	0.00	0.00	0.00	0.00
TOTAL OTHER EXPENSES	662,750	662,750	0.00	526,125.00	515,125.00	0.00	79.39	136,625.00
TOTAL 00-GENERAL EXPENDITURES	662,750	662,750	0.00	526,125.00	515,125.00	0.00	79.39	136,625.00
TOTAL EXPENDITURES	662,750	662,750	0.00	526,125.00	515,125.00	0.00	79.39	136,625.00
REVENUE OVER/(UNDER) EXPENDITURES	2,250	2,250	54,906.09	110,171.22	25,332.73	0.00	4,896.50 (	107,921.22)

CITY OF WINDCREST
BALANCE SHEET
AS OF: MARCH 31ST, 2025

18 -WCC&PD FUND

ACCOUNT #	ACCOUNT DESCRIPTION	BALANCE		
ASSETS				
18-1102	CLAIM ON CASH	(7,957.15)		
18-1105	CASH - SAVINGS	294,591.12		
18-1210	PREPAID MAINTENANCE	0.00		
18-1315	DUE FROM GENERAL FUND	0.00		
18-1510	A/R-SALES TAX	0.00		
18-1515	A/R - MISC.	0.00		
			286,633.97	
	TOTAL ASSETS			286,633.97
LIABILITIES				
18-2200	WAGES PAYABLE	0.00		
18-2230	TMRS PAYABLE	0.00		
18-2250	INSURANCE A/P	0.40		
18-2315	DUE TO GENERAL FUND	0.00		
18-2400	A/P PENDING	(6,837.57)		
18-2401	A/P MANUAL	0.00		
18-2410	A/P - SALES TAX	0.00		
18-2451	A/P SALES TAX PAYBACK	0.00		
	TOTAL LIABILITIES		(6,837.17)	
EQUITY				
18-3201	FUND BALANCE	579,904.53		
	TOTAL BEGINNING EQUITY	579,904.53		
	TOTAL REVENUE	291,323.55		
	TOTAL EXPENSES	577,756.94		
	TOTAL INCREASE/(DECREASE) IN FUND BAL.	(286,433.39)		
	TOTAL EQUITY & FUND BALANCE		293,471.14	
	TOTAL LIABILITIES, EQUITY & FUND BALANCE			286,633.97

REVENUE & EXPENSE REPORT (UNAUDITED)
AS OF: MARCH 31ST, 2025

18 -WCC&PD FUND

% OF YEAR COMPLETED: 50.00

	ORIGINAL BUDGET	AMENDED BUDGET	CURRENT PERIOD	YEAR TO DATE BALANCE	PRIOR YEAR YTD BALANCE	TOTAL ENCUMBERED	% OF BUDGET	BUDGET BALANCE
REVENUE SUMMARY								
ALL REVENUES	1,253,313	1,253,313	58,536.65	291,323.55	377,874.27	0.00	23.24	961,989.45
TOTAL REVENUES	1,253,313	1,253,313	58,536.65	291,323.55	377,874.27	0.00	23.24	961,989.45
EXPENDITURE SUMMARY								
00-GENERAL EXPENDITURES								
SALARIES & BENEFITS	932,797	932,797	62,073.07	410,934.32	324,268.94	0.00	44.05	521,863.12
OTHER EXPENSES	252,880	252,880	1,211.67	104,028.13	27,698.91	0.00	41.14	148,851.40
CAPITAL EXPENSES	351,594	351,594	0.00	62,794.49	33,215.94	0.00	17.86	288,799.57
OTHER INCOME/EXPENSES	78,000	78,000	0.00	0.00	0.00	0.00	0.00	78,000.00
TOTAL 00-GENERAL EXPENDITURES	1,615,271	1,615,271	63,284.74	577,756.94	385,183.79	0.00	35.77	1,037,514.09
TOTAL EXPENDITURES	1,615,271	1,615,271	63,284.74	577,756.94	385,183.79	0.00	35.77	1,037,514.09
REVENUE OVER/(UNDER) EXPENDITURES	(361,958)	(361,958)	(4,748.09)	(286,433.39)	(7,309.52)	0.00	79.13	(75,524.64)

REVENUE & EXPENSE REPORT (UNAUDITED)
AS OF: MARCH 31ST, 2025

18 -WCC&PD FUND

% OF YEAR COMPLETED: 50.00

REVENUES	ORIGINAL BUDGET	AMENDED BUDGET	CURRENT PERIOD	YEAR TO DATE BALANCE	PRIOR YEAR YTD BALANCE	TOTAL ENCUMBERED	% OF BUDGET	BUDGET BALANCE
18-4101 INCOME - SALES TAX	1,213,313	1,213,313	57,471.15	282,098.45	356,927.98	0.00	23.25	931,214.55
18-4102 INCOME-K9 DONATIONS	0	0	0.00	0.00	0.00	0.00	0.00	0.00
18-4105 INCOME - OTHER	0	0	0.00	0.00	0.00	0.00	0.00	0.00
18-4115 INCOME - INTEREST	40,000	40,000	1,065.50	9,225.10	20,946.29	0.00	23.06	30,774.90
18-4120 PROCEEDS FROM GUN SALES	0	0	0.00	0.00	0.00	0.00	0.00	0.00
18-4515 ARPA FUNDS	0	0	0.00	0.00	0.00	0.00	0.00	0.00
18-4900 PROCEEDS FROM CAPITAL LEASE	0	0	0.00	0.00	0.00	0.00	0.00	0.00
TOTAL REVENUES	1,253,313	1,253,313	58,536.65	291,323.55	377,874.27	0.00	23.24	961,989.45

REVENUE & EXPENSE REPORT (UNAUDITED)
AS OF: MARCH 31ST, 2025

18 -WCC&PD FUND

% OF YEAR COMPLETED: 50.00

DEPARTMENTAL EXPENDITURES	ORIGINAL BUDGET	AMENDED BUDGET	CURRENT PERIOD	YEAR TO DATE BALANCE	PRIOR YEAR YTD BALANCE	TOTAL ENCUMBERED	% OF BUDGET	BUDGET BALANCE
00-GENERAL EXPENDITURES								
SALARIES & BENEFITS								
18-500-009 SALARIES	550,346	550,346	36,193.04	230,682.27	191,763.84	0.00	41.92	319,663.69
18-500-010 ADMINISTRATIVE EXPENSE	0	0	0.00	0.00	0.00	0.00	0.00	0.00
18-500-011 LONGEVITY	0	0	0.00	0.00	0.00	0.00	0.00	0.00
18-500-013 STIPEND	0	0	0.00	0.00	0.00	0.00	0.00	0.00
18-500-014 SPECIAL ASSIGNMENT PAY K-9	600	600	0.00	0.00	0.00	0.00	0.00	600.00
18-500-015 INCENTIVE PAY-BILING & SHIFT	0	0	116.50	598.97	511.94	0.00	0.00	(598.97)
18-500-017 CERTIFICATION PAY	1,500	1,500	161.54	1,038.48	1,384.65	0.00	69.23	461.52
18-500-018 EDUCATION PAY	1,500	1,500	92.32	530.84	392.36	0.00	35.39	969.16
18-500-019 TUITION REIMBURSEMENT	0	0	0.00	0.00	0.00	0.00	0.00	0.00
18-500-020 OVERTIME	60,000	60,000	3,548.51	34,005.63	14,833.61	0.00	56.68	25,994.37
18-500-021 7K HOURS	24,924	24,924	1,309.56	7,885.84	5,810.00	0.00	31.64	17,037.84
18-500-026 HAZARDOUS DUTY PAY	2,160	2,160	36.94	249.33	267.78	0.00	11.54	1,910.67
18-500-030 SOCIAL SECURITY	49,307	49,307	3,147.26	20,940.00	16,530.11	0.00	42.47	28,366.52
18-500-040 HEALTH INSURANCE	123,987	123,987	8,354.65	56,026.80	49,608.01	0.00	45.19	67,960.20
18-500-050 RETIREMENT	91,249	91,249	6,848.15	41,880.85	30,961.60	0.00	45.90	49,368.43
18-500-060 WORKERS COMPENSATION	27,000	27,000	2,250.00	15,714.73	11,101.02	0.00	58.20	11,285.27
18-500-070 UNEMPLOYMENT COMPENSATION	225	225	14.60	1,380.58	1,104.02	0.00	613.59	(1,155.58)
TOTAL SALARIES & BENEFITS	932,797	932,797	62,073.07	410,934.32	324,268.94	0.00	44.05	521,863.12
OTHER EXPENSES								
18-500-120 DUES & SUBSCRIPTIONS	0	0	0.00	0.00	0.00	0.00	0.00	0.00
18-500-130 BONDS & TRAINING	0	0	0.00	0.00	0.00	0.00	0.00	0.00
18-500-250 LEGAL EXPENSE	0	0	0.00	0.00	0.00	0.00	0.00	0.00
18-500-290 AUDIT	4,000	4,000	0.00	0.00	3,930.00	0.00	0.00	4,000.00
18-500-325 SALES TAX COLLECTION SERVICE	20,000	20,000	0.00	4,065.00	12,001.00	0.00	20.33	15,935.00
18-500-420 OFFICE SUPPLIES/FURNITURE	0	0	0.00	0.00	0.00	0.00	0.00	0.00
18-500-430 JUVENILE PROG.FEES & SUPPLIE	0	0	0.00	0.00	0.00	0.00	0.00	0.00
18-500-431 MISCELLANEOUS SUPPLIES	0	0	0.00	0.00	0.00	0.00	0.00	0.00
18-500-433 IT SOFWARE HARDWARE&SUPPLIES	0	0	0.00	0.00	0.00	0.00	0.00	0.00
18-500-435 K-9 PROGRAM EXPENSES	0	0	0.00	0.00	0.00	0.00	0.00	0.00
18-500-440 ELECTION EXPENSE	0	0	0.00	0.00	0.00	0.00	0.00	0.00
18-500-450 SYSTEM ACCESS FEE	0	0	0.00	0.00	0.00	0.00	0.00	0.00
18-500-480 UNIFORMS	0	0	0.00	0.00	0.00	0.00	0.00	0.00
18-500-485 WEAPONS & AMMUNITION	0	0	0.00	0.00	0.00	0.00	0.00	0.00
18-500-486 PERSONAL PROTECTIVE EQUIPMEN	0	0	0.00	0.00	0.00	0.00	0.00	0.00
18-500-487 VEHICLE EQUIPMENT	0	0	0.00	0.00	0.00	0.00	0.00	0.00
18-500-488 EMERGENCY SERVICES	0	0	0.00	0.00	0.00	0.00	0.00	0.00
18-500-489 COMMUNITY SERVICES	0	0	0.00	0.00	0.00	0.00	0.00	0.00
18-500-490 MEMORIAL SERVICES	0	0	0.00	0.00	0.00	0.00	0.00	0.00
18-500-500 MISC. CRIME PREVENTION	0	0	0.00	0.00	0.00	0.00	0.00	0.00
18-500-515 DEBT SERVICE - PRINCIPAL	0	0	0.00	0.00	0.00	0.00	0.00	0.00
18-500-516 DEBT SERVICE - PRINCIPAL	0	0	0.00	0.00	0.00	0.00	0.00	0.00
18-500-517 MAINTENANCE ON EQUIPMENT	228,880	228,880	1,211.67	99,963.13	11,767.91	0.00	43.67	128,916.40
18-500-518 DEBT SERVICE - INTEREST	0	0	0.00	0.00	0.00	0.00	0.00	0.00
18-500-520 BICYCLE PARTS & MAINTENANCE	0	0	0.00	0.00	0.00	0.00	0.00	0.00
TOTAL OTHER EXPENSES	252,880	252,880	1,211.67	104,028.13	27,698.91	0.00	41.14	148,851.40

REVENUE & EXPENSE REPORT (UNAUDITED)
AS OF: MARCH 31ST, 2025

18 -WCC&PD FUND

% OF YEAR COMPLETED: 50.00

DEPARTMENTAL EXPENDITURES	ORIGINAL BUDGET	AMENDED BUDGET	CURRENT PERIOD	YEAR TO DATE BALANCE	PRIOR YEAR YTD BALANCE	TOTAL ENCUMBERED	% OF BUDGET	BUDGET BALANCE
CAPITAL EXPENSES								
18-500-800 CAPITAL EXPENDITURES	351,594	351,594	0.00	62,794.49	33,215.94	0.00	17.86	288,799.57
TOTAL CAPITAL EXPENSES	351,594	351,594	0.00	62,794.49	33,215.94	0.00	17.86	288,799.57
OTHER INCOME/EXPENSES								
18-500-900 PRIOR PERIOD ADJUSTMENTS	0	0	0.00	0.00	0.00	0.00	0.00	0.00
18-500-901 TRANSFER TO GEN FUND	78,000	78,000	0.00	0.00	0.00	0.00	0.00	78,000.00
TOTAL OTHER INCOME/EXPENSES	78,000	78,000	0.00	0.00	0.00	0.00	0.00	78,000.00
TOTAL 00-GENERAL EXPENDITURES	1,615,271	1,615,271	63,284.74	577,756.94	385,183.79	0.00	35.77	1,037,514.09
TOTAL EXPENDITURES	1,615,271	1,615,271	63,284.74	577,756.94	385,183.79	0.00	35.77	1,037,514.09
REVENUE OVER/(UNDER) EXPENDITURES	(361,958)	(361,958)	(4,748.09)	(286,433.39)	(7,309.52)	0.00	79.13	(75,524.64)

BALANCE SHEET
AS OF: MARCH 31ST, 2025

19 -CAPITAL PROJECTS STREETS

ACCOUNT #	ACCOUNT DESCRIPTION	BALANCE		
ASSETS				
19-1102	CLAIM ON CASH	1,167,469.31		
19-1105	CASH - SAVINGS	27,426.27		
19-1115	INVESTMENTS-TEXPOOL #159000002	11,596.51		
19-1116	INVESTMENTS-TEXPOOL#159000001	8,312.08		
19-1204	PREPAID SALES TAX	0.26		
19-1315	DUE FROM GENERAL FUND	0.00		
19-1510	A/R-SALES TAX	(90.04)		
			1,214,714.39	
	TOTAL ASSETS			1,214,714.39
LIABILITIES				
19-2315	DUE TO GENERAL FUND	0.00		
19-2400	A/P PENDING	0.00		
19-2410	A/P - SALES TAX	0.00		
19-2441	Construction Retainage	0.01		
19-2451	A/P SALES TAX PAYBACK	0.00		
	TOTAL LIABILITIES		0.01	
EQUITY				
19-3201	FUND BALANCE	1,400,210.05		
	TOTAL BEGINNING EQUITY	1,400,210.05		
	TOTAL REVENUE	283,186.28		
	TOTAL EXPENSES	468,681.95		
	TOTAL INCREASE/(DECREASE) IN FUND BAL.	(185,495.67)		
	TOTAL EQUITY & FUND BALANCE		1,214,714.38	
	TOTAL LIABILITIES, EQUITY & FUND BALANCE			1,214,714.39

REVENUE & EXPENSE REPORT (UNAUDITED)
AS OF: MARCH 31ST, 2025

19 -CAPITAL PROJECTS STREETS

% OF YEAR COMPLETED: 50.00

	ORIGINAL BUDGET	AMENDED BUDGET	CURRENT PERIOD	YEAR TO DATE BALANCE	PRIOR YEAR YTD BALANCE	TOTAL ENCUMBERED	% OF BUDGET	BUDGET BALANCE
REVENUE SUMMARY								
ALL REVENUES	945,423	945,423	57,676.32	283,186.28	273,978.61	0.00	29.95	662,236.72
TOTAL REVENUES	945,423	945,423	57,676.32	283,186.28	273,978.61	0.00	29.95	662,236.72
EXPENDITURE SUMMARY								
00-GENERAL EXPENDITURES								
SALARIES & BENEFITS	5,000	5,000	0.00	550.00	1,100.00	0.00	11.00	4,450.00
OTHER EXPENSES	0	0	0.00	6,400.00	0.00	0.00	0.00	(6,400.00)
CAPITAL EXPENSES	0	0	68,740.37	461,731.95	0.00	0.00	0.00	(461,731.95)
OTHER INCOME/EXPENSES	0	0	0.00	0.00	0.00	0.00	0.00	0.00
TOTAL 00-GENERAL EXPENDITURES	5,000	5,000	68,740.37	468,681.95	1,100.00	0.00	9,373.64	(463,681.95)
TOTAL EXPENDITURES	5,000	5,000	68,740.37	468,681.95	1,100.00	0.00	9,373.64	(463,681.95)
REVENUE OVER/(UNDER) EXPENDITURES	940,423	940,423	(11,064.05)	(185,495.67)	272,878.61	0.00	19.72-	1,125,918.67

REVENUE & EXPENSE REPORT (UNAUDITED)
AS OF: MARCH 31ST, 2025

19 -CAPITAL PROJECTS STREETS

% OF YEAR COMPLETED: 50.00

REVENUES	ORIGINAL BUDGET	AMENDED BUDGET	CURRENT PERIOD	YEAR TO DATE BALANCE	PRIOR YEAR YTD BALANCE	TOTAL ENCUMBERED	% OF BUDGET	BUDGET BALANCE
19-4101 INCOME - TAX NOTES PROCEEDS	0	0	0.00	0.00	0.00	0.00	0.00	0.00
19-4105 TRANSFER FROM GENERAL FUND	0	0	0.00	0.00	0.00	0.00	0.00	0.00
19-4115 INCOME - INTEREST	1,500	1,500	116.60	724.30	798.31	0.00	48.29	775.70
19-4116 INCOME-SALES TAX (.25)	943,923	943,923	57,559.72	282,461.98	273,180.30	0.00	29.92	661,461.02
19-4460 MISC. INCOME	0	0	0.00	0.00	0.00	0.00	0.00	0.00
TOTAL REVENUES	945,423	945,423	57,676.32	283,186.28	273,978.61	0.00	29.95	662,236.72

REVENUE & EXPENSE REPORT (UNAUDITED)
AS OF: MARCH 31ST, 2025

19 -CAPITAL PROJECTS STREETS

% OF YEAR COMPLETED: 50.00

DEPARTMENTAL EXPENDITURES	ORIGINAL BUDGET	AMENDED BUDGET	CURRENT PERIOD	YEAR TO DATE BALANCE	PRIOR YEAR YTD BALANCE	TOTAL ENCUMBERED	% OF BUDGET	BUDGET BALANCE
00-GENERAL EXPENDITURES								
SALARIES & BENEFITS								
19-500-050 MISCELLANEOUS EXPENSE	5,000	5,000	0.00	550.00	1,100.00	0.00	11.00	4,450.00
TOTAL SALARIES & BENEFITS	5,000	5,000	0.00	550.00	1,100.00	0.00	11.00	4,450.00
OTHER EXPENSES								
19-500-320 ENGINEER/ARCHITECT	0	0	0.00	6,400.00	0.00	0.00	0.00	(6,400.00)
19-500-325 SALES TAX COLLECTION SERVICE	0	0	0.00	0.00	0.00	0.00	0.00	0.00
TOTAL OTHER EXPENSES	0	0	0.00	6,400.00	0.00	0.00	0.00	(6,400.00)
CAPITAL EXPENSES								
19-500-800 CAPITAL EXPENDITURES	0	0	68,740.37	461,731.95	0.00	0.00	0.00	(461,731.95)
19-500-810 STREET MAINTENANCE	0	0	0.00	0.00	0.00	0.00	0.00	0.00
TOTAL CAPITAL EXPENSES	0	0	68,740.37	461,731.95	0.00	0.00	0.00	(461,731.95)
OTHER INCOME/EXPENSES								
19-500-900 TRANSFER TO GENERAL FUND	0	0	0.00	0.00	0.00	0.00	0.00	0.00
TOTAL OTHER INCOME/EXPENSES	0	0	0.00	0.00	0.00	0.00	0.00	0.00
TOTAL 00-GENERAL EXPENDITURES	5,000	5,000	68,740.37	468,681.95	1,100.00	0.00	9,373.64	(463,681.95)
TOTAL EXPENDITURES	5,000	5,000	68,740.37	468,681.95	1,100.00	0.00	9,373.64	(463,681.95)
REVENUE OVER/(UNDER) EXPENDITURES	940,423	940,423	(11,064.05)	(185,495.67)	272,878.61	0.00	19.72-	1,125,918.67

CITY OF WINDCREST
BALANCE SHEET
AS OF: MARCH 31ST, 2025

20 -PUBLIC, EDUCATION&GOV.

ACCOUNT #	ACCOUNT DESCRIPTION	BALANCE		
ASSETS				
======				
20-1102	CLAIM ON CASH	97,928.92		
20-1605	A/R - FRANCHISE	0.00		
			97,928.92	
	TOTAL ASSETS			97,928.92
				==========
LIABILITIES				
==========				
20-2400	A/P PENDING	0.00		
	TOTAL LIABILITIES		0.00	
EQUITY				
======				
20-3201	FUND BALANCE	95,290.95		
	TOTAL BEGINNING EQUITY	95,290.95		
	TOTAL REVENUE	2,637.97		
	TOTAL EXPENSES	0.00		
	TOTAL INCREASE/(DECREASE) IN FUND BAL.	2,637.97		
	TOTAL EQUITY & FUND BALANCE		97,928.92	
	TOTAL LIABILITIES, EQUITY & FUND BALANCE			97,928.92
				==========

REVENUE & EXPENSE REPORT (UNAUDITED)

AS OF: MARCH 31ST, 2025

20 -PUBLIC, EDUCATION&GOV.

% OF YEAR COMPLETED: 50.00

	ORIGINAL BUDGET	AMENDED BUDGET	CURRENT PERIOD	YEAR TO DATE BALANCE	PRIOR YEAR YTD BALANCE	TOTAL ENCUMBERED	% OF BUDGET	BUDGET BALANCE
REVENUE SUMMARY								
ALL REVENUES	13,700	13,700	0.00	2,637.97	3,034.40	0.00	19.26	11,062.03
TOTAL REVENUES	13,700	13,700	0.00	2,637.97	3,034.40	0.00	19.26	11,062.03
REVENUE OVER/(UNDER) EXPENDITURES	13,700	13,700	0.00	2,637.97	3,034.40	0.00	19.26	11,062.03

20 -PUBLIC, EDUCATION&GOV.

% OF YEAR COMPLETED: 50.00

REVENUES	ORIGINAL BUDGET	AMENDED BUDGET	CURRENT PERIOD	YEAR TO DATE BALANCE	PRIOR YEAR YTD BALANCE	TOTAL ENCUMBERED	% OF BUDGET	BUDGET BALANCE
20-4105 INCOME OTHER	13,700	13,700	0.00	2,637.97	3,034.40	0.00	19.26	11,062.03
TOTAL REVENUES	13,700	13,700	0.00	2,637.97	3,034.40	0.00	19.26	11,062.03
REVENUE OVER/(UNDER) EXPENDITURES	13,700	13,700	0.00	2,637.97	3,034.40	0.00	19.26	11,062.03

21 -2019 SERIES A

ACCOUNT #	ACCOUNT DESCRIPTION	BALANCE		
ASSETS				
21-1102	CLAIM ON CASH	0.00		
21-1105	CASH	5,367.52		
			5,367.52	
	TOTAL ASSETS			5,367.52
LIABILITIES				
21-2316	DUE TO DEBT SERVICE	0.00		
21-2400	A/P PENDING	0.00		
21-2441	CONSTRUCTION RETAINAGE	0.00		
	TOTAL LIABILITIES		0.00	
EQUITY				
21-3201	FUND BALANCE	0.00		
	TOTAL BEGINNING EQUITY	0.00		
	TOTAL REVENUE	5,367.52		
	TOTAL EXPENSES	0.00		
	TOTAL INCREASE/(DECREASE) IN FUND BAL.	5,367.52		
	TOTAL EQUITY & FUND BALANCE		5,367.52	
	TOTAL LIABILITIES, EQUITY & FUND BALANCE			5,367.52

REVENUE & EXPENSE REPORT (UNAUDITED)
AS OF: MARCH 31ST, 2025

21 -2019 SERIES A

% OF YEAR COMPLETED: 50.00

	ORIGINAL BUDGET	AMENDED BUDGET	CURRENT PERIOD	YEAR TO DATE BALANCE	PRIOR YEAR YTD BALANCE	TOTAL ENCUMBERED	% OF BUDGET	BUDGET BALANCE
REVENUE SUMMARY								
ALL REVENUES	15,000	15,000	13.95	5,367.52	8,994.88	0.00	35.78	9,632.48
TOTAL REVENUES	15,000	15,000	13.95	5,367.52	8,994.88	0.00	35.78	9,632.48
EXPENDITURE SUMMARY								
00-GENERAL EXPENDITURES								
OTHER EXPENSES	0	0	0.00	0.00	0.00	0.00	0.00	0.00
CAPITAL EXPENSES	0	0	0.00	0.00	2,500.00	0.00	0.00	0.00
TOTAL 00-GENERAL EXPENDITURES	0	0	0.00	0.00	2,500.00	0.00	0.00	0.00
TOTAL EXPENDITURES	0	0	0.00	0.00	2,500.00	0.00	0.00	0.00
REVENUE OVER/(UNDER) EXPENDITURES	15,000	15,000	13.95	5,367.52	6,494.88	0.00	35.78	9,632.48

REVENUE & EXPENSE REPORT (UNAUDITED)
AS OF: MARCH 31ST, 2025

21 -2019 SERIES A

% OF YEAR COMPLETED: 50.00

REVENUES	ORIGINAL BUDGET	AMENDED BUDGET	CURRENT PERIOD	YEAR TO DATE BALANCE	PRIOR YEAR YTD BALANCE	TOTAL ENCUMBERED	% OF BUDGET	BUDGET BALANCE
21-4105 INCOME - OTHER	0	0	0.00	0.00	0.00	0.00	0.00	0.00
21-4106 BOND PREMIUM	0	0	0.00	0.00	0.00	0.00	0.00	0.00
21-4107 BONDISSUANCE	0	0	0.00	0.00	0.00	0.00	0.00	0.00
21-4115 INCOME-INTEREST	15,000	15,000	13.95	5,367.52	8,994.88	0.00	35.78	9,632.48
TOTAL REVENUES	15,000	15,000	13.95	5,367.52	8,994.88	0.00	35.78	9,632.48

REVENUE & EXPENSE REPORT (UNAUDITED)
AS OF: MARCH 31ST, 2025

21 -2019 SERIES A

% OF YEAR COMPLETED: 50.00

DEPARTMENTAL EXPENDITURES	ORIGINAL BUDGET	AMENDED BUDGET	CURRENT PERIOD	YEAR TO DATE BALANCE	PRIOR YEAR YTD BALANCE	TOTAL ENCUMBERED	% OF BUDGET	BUDGET BALANCE
00-GENERAL EXPENDITURES								
OTHER EXPENSES								
21-500-200 UNDERWRITERS FEES	0	0	0.00	0.00	0.00	0.00	0.00	0.00
21-500-201 BOND ISSUANCE COST	0	0	0.00	0.00	0.00	0.00	0.00	0.00
21-500-320 ENGENEER/ARCHITECT	0	0	0.00	0.00	0.00	0.00	0.00	0.00
21-500-500 MISC. EXPENSE	0	0	0.00	0.00	0.00	0.00	0.00	0.00
TOTAL OTHER EXPENSES	0	0	0.00	0.00	0.00	0.00	0.00	0.00
CAPITAL EXPENSES								
21-500-800 CAPITAL EXPENDITURES	0	0	0.00	0.00	2,500.00	0.00	0.00	0.00
TOTAL CAPITAL EXPENSES	0	0	0.00	0.00	2,500.00	0.00	0.00	0.00
TOTAL 00-GENERAL EXPENDITURES	0	0	0.00	0.00	2,500.00	0.00	0.00	0.00
TOTAL EXPENDITURES	0	0	0.00	0.00	2,500.00	0.00	0.00	0.00
REVENUE OVER/(UNDER) EXPENDITURES	15,000	15,000	13.95	5,367.52	6,494.88	0.00	35.78	9,632.48

BALANCE SHEET
AS OF: MARCH 31ST, 2025

23 -Capital Assets and Debt

ACCOUNT #	ACCOUNT DESCRIPTION	BALANCE		
ASSETS				
23-1200	BUILDINGS	2,530,530.44		
23-1201	EQUIPMENT	7,361,106.85		
23-1202	LAND	347,050.06		
23-1203	INFRASTRUCTURE	26,984,778.50		
23-1204	CONSTRUCTION IN PROGRESS	1,071,571.29		
23-1220	ACCUMULATED DEPR.-BUILDINGS	(2,075,060.49)		
23-1221	ACCUMULATED DEPR.-EQUIPMENT	(5,169,412.13)		
23-1222	ACCUMULATED DEPR.	(13,207,792.55)		
			17,842,771.97	
	TOTAL ASSETS			17,842,771.97
LIABILITIES				
23-2600	BONDS PAYABLE-CURRENT	462,560.00		
23-2605	BONDS PAYABLE-LONG-TERM	7,221,742.00		
23-2610	UNAMORTIZED BOND PREMIUMS	683,185.00		
23-2615	ACCRUED INTEREST	35,344.00		
	TOTAL LIABILITIES		8,402,831.00	
EQUITY				
23-3201	FUND BALANCE	(35,344.00)		
23-3205	NET INVEST. IN CAPITAL ASSETS	9,475,284.97		
	TOTAL BEGINNING EQUITY	9,439,940.97		
	TOTAL EQUITY & FUND BALANCE		9,439,940.97	
	TOTAL LIABILITIES, EQUITY & FUND BALANCE			17,842,771.97

REVENUE & EXPENSE REPORT (UNAUDITED)
AS OF: MARCH 31ST, 2025

23 -Capital Assets and Debt

% OF YEAR COMPLETED: 50.00

	ORIGINAL BUDGET	AMENDED BUDGET	CURRENT PERIOD	YEAR TO DATE BALANCE	PRIOR YEAR YTD BALANCE	TOTAL ENCUMBERED	% OF BUDGET	BUDGET BALANCE
REVENUE OVER/(UNDER) EXPENDITURES	0	0	0.00	0.00	0.00	0.00	0.00	0.00

CITY OF WINDCREST
BALANCE SHEET
AS OF: MARCH 31ST, 2025

24 -Grant Fund

ACCOUNT #	ACCOUNT DESCRIPTION	BALANCE		
ASSETS				
======				
24-1102	CLAIM ON CASH	3,399.33		
24-1315	DUE FROM GENERAL FUND	0.00		
24-1550	A/R-MISCELLANEOUS	0.00		
			3,399.33	
	TOTAL ASSETS			3,399.33
				==========
LIABILITIES				
==========				
24-2315	DUE TO GENERAL FUND	0.00		
24-2400	A/P PENDING	0.00		
	TOTAL LIABILITIES		0.00	
EQUITY				
======				
24-3201	FUND BALANCE	3,399.33		
	TOTAL BEGINNING EQUITY	3,399.33		
	TOTAL REVENUE	0.00		
	TOTAL EXPENSES	0.00		
	TOTAL INCREASE/(DECREASE) IN FUND BAL.	0.00		
	TOTAL EQUITY & FUND BALANCE		3,399.33	
	TOTAL LIABILITIES, EQUITY & FUND BALANCE			3,399.33
				==========

REVENUE & EXPENSE REPORT (UNAUDITED)
AS OF: MARCH 31ST, 2025

24 -Grant Fund

% OF YEAR COMPLETED: 50.00

	ORIGINAL BUDGET	AMENDED BUDGET	CURRENT PERIOD	YEAR TO DATE BALANCE	PRIOR YEAR YTD BALANCE	TOTAL ENCUMBERED	% OF BUDGET	BUDGET BALANCE
REVENUE SUMMARY								
ALL REVENUES	0	0	0.00	0.00	41,114.16	0.00	0.00	0.00
TOTAL REVENUES	0	0	0.00	0.00	41,114.16	0.00	0.00	0.00
EXPENDITURE SUMMARY								
02-POLICE DEPARTMENT								
OTHER EXPENSES	0	0	0.00	0.00	27,507.70	0.00	0.00	0.00
TOTAL 02-POLICE DEPARTMENT	0	0	0.00	0.00	27,507.70	0.00	0.00	0.00
TOTAL EXPENDITURES	0	0	0.00	0.00	27,507.70	0.00	0.00	0.00
REVENUE OVER/(UNDER) EXPENDITURES	0	0	0.00	0.00	13,606.46	0.00	0.00	0.00

REVENUE & EXPENSE REPORT (UNAUDITED)
AS OF: MARCH 31ST, 2025

24 -Grant Fund

% OF YEAR COMPLETED: 50.00

REVENUES	ORIGINAL BUDGET	AMENDED BUDGET	CURRENT PERIOD	YEAR TO DATE BALANCE	PRIOR YEAR YTD BALANCE	TOTAL ENCUMBERED	% OF BUDGET	BUDGET BALANCE
24-4001 BALISTIC SHILED INCOME	0	0	0.00	0.00	0.00	0.00	0.00	0.00
24-4101 POLICE GRANTS INCOME	0	0	0.00	0.00	41,114.16	0.00	0.00	0.00
24-4102 FIRE GRANTS INCOME	0	0	0.00	0.00	0.00	0.00	0.00	0.00
TOTAL REVENUES	0	0	0.00	0.00	41,114.16	0.00	0.00	0.00

REVENUE & EXPENSE REPORT (UNAUDITED)
AS OF: MARCH 31ST, 2025

24 -Grant Fund

% OF YEAR COMPLETED: 50.00

DEPARTMENTAL EXPENDITURES	ORIGINAL BUDGET	AMENDED BUDGET	CURRENT PERIOD	YEAR TO DATE BALANCE	PRIOR YEAR YTD BALANCE	TOTAL ENCUMBERED	% OF BUDGET	BUDGET BALANCE
02-POLICE DEPARTMENT								
OTHER EXPENSES								
24-502-200 BALISTIC SHIELDS GRANT	0	0	0.00	0.00	27,507.70	0.00	0.00	0.00
24-502-201 TECHNOLOGY GRANT	0	0	0.00	0.00	0.00	0.00	0.00	0.00
TOTAL OTHER EXPENSES	0	0	0.00	0.00	27,507.70	0.00	0.00	0.00
TOTAL 02-POLICE DEPARTMENT	0	0	0.00	0.00	27,507.70	0.00	0.00	0.00
TOTAL EXPENDITURES	0	0	0.00	0.00	27,507.70	0.00	0.00	0.00
REVENUE OVER/(UNDER) EXPENDITURES	0	0	0.00	0.00	13,606.46	0.00	0.00	0.00

25 -YOUTH DIVERSION FUND

ACCOUNT #	ACCOUNT DESCRIPTION	BALANCE		
ASSETS				
25-1102	CLAIM ON CASH	28.62		
			28.62	
	TOTAL ASSETS			28.62
LIABILITIES				
25-2400	A/P PENDING	0.00		
	TOTAL LIABILITIES		0.00	
EQUITY				
25-3201	FUND BALANCE	0.00		
	TOTAL BEGINNING EQUITY	0.00		
	TOTAL REVENUE	28.62		
	TOTAL EXPENSES	0.00		
	TOTAL INCREASE/(DECREASE) IN FUND BAL.	28.62		
	TOTAL EQUITY & FUND BALANCE		28.62	
	TOTAL LIABILITIES, EQUITY & FUND BALANCE			28.62

REVENUE & EXPENSE REPORT (UNAUDITED)

AS OF: MARCH 31ST, 2025

25 -YOUTH DIVERSION FUND

% OF YEAR COMPLETED: 50.00

	ORIGINAL BUDGET	AMENDED BUDGET	CURRENT PERIOD	YEAR TO DATE BALANCE	PRIOR YEAR YTD BALANCE	TOTAL ENCUMBERED	% OF BUDGET	BUDGET BALANCE
REVENUE SUMMARY								
ALL REVENUES	0	0	28.62	28.62	0.00	0.00	0.00	(28.62)
TOTAL REVENUES	0	0	28.62	28.62	0.00	0.00	0.00	(28.62)
REVENUE OVER/(UNDER) EXPENDITURES	0	0	28.62	28.62	0.00	0.00	0.00	(28.62)

25 -YOUTH DIVERSION FUND

% OF YEAR COMPLETED: 50.00

REVENUES	ORIGINAL BUDGET	AMENDED BUDGET	CURRENT PERIOD	YEAR TO DATE BALANCE	PRIOR YEAR YTD BALANCE	TOTAL ENCUMBERED	% OF BUDGET	BUDGET BALANCE
25-4101 INCOME YOUTH DIVERSION	0	0	28.62	28.62	0.00	0.00	0.00	(28.62)
TOTAL REVENUES	0	0	28.62	28.62	0.00	0.00	0.00	(28.62)
REVENUE OVER/(UNDER) EXPENDITURES	0	0	28.62	28.62	0.00	0.00	0.00	(28.62)

REVENUE & EXPENSE REPORT (UNAUDITED)
AS OF: MARCH 31ST, 2025

09 -ASSET SEIZURE FUND- STATE

% OF YEAR COMPLETED: 50.00

	ORIGINAL BUDGET	AMENDED BUDGET	CURRENT PERIOD	YEAR TO DATE BALANCE	PRIOR YEAR YTD BALANCE	TOTAL ENCUMBERED	% OF BUDGET	BUDGET BALANCE
REVENUE SUMMARY								
ALL REVENUES	0	0	1.14	264.49	8.59	0.00	0.00	(264.49)
TOTAL REVENUES	0	0	1.14	264.49	8.59	0.00	0.00	(264.49)
EXPENDITURE SUMMARY								
00-GENERAL EXPENDITURES								
SALARIES & BENEFITS	0	0	0.00	0.00	0.00	0.00	0.00	0.00
CAPITAL EXPENSES	0	0	0.00	0.00	0.00	0.00	0.00	0.00
TOTAL 00-GENERAL EXPENDITURES	0	0	0.00	0.00	0.00	0.00	0.00	0.00
TOTAL EXPENDITURES	0	0	0.00	0.00	0.00	0.00	0.00	0.00
REVENUE OVER/(UNDER) EXPENDITURES	0	0	1.14	264.49	8.59	0.00	0.00	(264.49)

REVENUE & EXPENSE REPORT (UNAUDITED)
AS OF: MARCH 31ST, 2025

09 -ASSET SEIZURE FUND- STATE

% OF YEAR COMPLETED: 50.00

REVENUES	ORIGINAL BUDGET	AMENDED BUDGET	CURRENT PERIOD	YEAR TO DATE BALANCE	PRIOR YEAR YTD BALANCE	TOTAL ENCUMBERED	% OF BUDGET	BUDGET BALANCE
09-4101 INCOME-COURT FORFEITED PR	0	0	0.00	257.34	0.00	0.00	0.00	(257.34)
09-4105 INCOME-ABAND/SEIZED PROP	0	0	0.00	0.00	0.00	0.00	0.00	0.00
09-4115 INCOME-INTEREST	0	0	1.14	7.15	8.59	0.00	0.00	(7.15)
TOTAL REVENUES	0	0	1.14	264.49	8.59	0.00	0.00	(264.49)

City of Windcrest

Quarterly Investment Report
January 1, 2025 to March 31, 2025
Portfolio Summary Management Report

Portfolio as of January 1, 2025			*Portfolio as of March 31, 2025*		
Beginning Book Value	$	13,693,881	Ending Book Value	$	13,624,132
Beginning Market Value	$	13,693,881	Ending Market Value	$	13,624,132
			Investment Income for the quarter	$	113,826
Unrealized Gain / Loss	$	-	Unrealized Gain/Loss	$	-
			Change in Unrealized Gain/Loss	$	-
			*Change in Market Value:	$	(69,749)

Authorized by:

N. Witmer 4.04.25

Natalia Witmer, CGFO
Municipal Finance Officer

N. Witmer

Natalia Witmer, CGFO
Interim City Manager

This report is prepared in compliance with the City's Investment Policy and reporting requirements in the Government Code Chapter 2256.

*Change in Market Value is required data, but will primarily reflect the receipt and expenditures of the City's funds from quarter to quarter.

Your Portfolio

As of March 31, 2025

Your portfolio by diversification.

TX Pool	6,975,554
CDs	26,498
Bank Money Market Accounts	-
Bank Checking Accounts	6,622,079

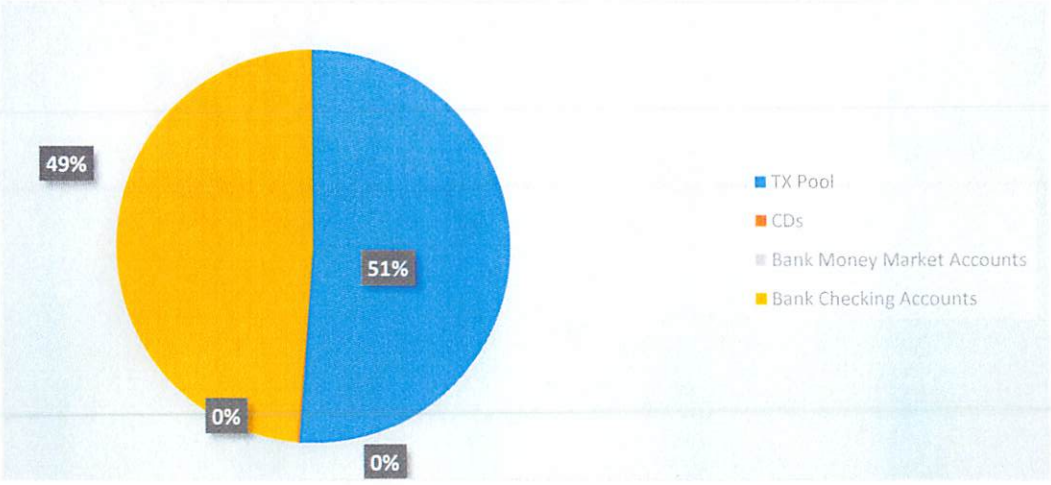

Your portfolio by maturity.

Current	13,597,633
3 months to 1 year	26,498

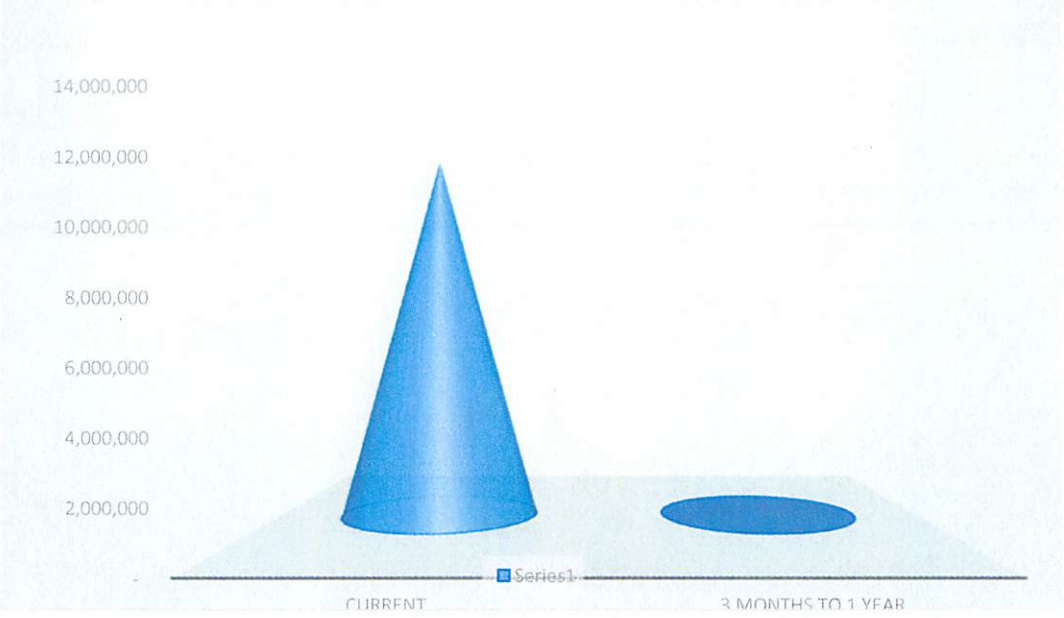

Your Portfolio

As of March 31, 2025

Investments	Par Value	Market Value	Book Value	% of Portfolio	Term (days)
Investment Pools	6,975,554	6,975,554	6,975,554	51.20%	1
Money Market Funds	-	-	-	0.00%	1
Bank Accounts	6,622,079	6,622,079	6,622,079	48.61%	1
CDs	26,498	26,498	26,498	0.19%	129/365
Weighted Average Maturity (TexPool)					37.3

CITY OF WINDCREST FINANCE SUMMARY
For the Period Ending March 31, 2025

		Account	Interest Rate Avg.	Term (da
Frost Bank Accounts:				
Pooled Checking	$	5,989,316	3.43%	1
General Fund Money Market	$	6,699	3.43%	1
MEIA Proceeds	$	33,862	3.43%	1
Garbage Fund Checking	$	29,146	3.43%	1
Garbage Fund Money Market	$	525	3.43%	1
Debt Service Fund	$	-	3.43%	1
Capital Projects Street Fund	$	27,426	3.43%	1
Hotel/Motel Occupancy Tax Fund	$	180,279	3.43%	1
Windcrest Crime Control & Prevention Dist. Fund	$	294,591	3.43%	1
Asset Forfeiture/Seizure Savings (Federal)	$	396	3.43%	1
School Crossing Guard Savings	$	16,077	3.43%	1
Police Donation Savings	$	1,869	3.43%	1
Asset Forfeiture/Seizure Savings (State)	$	438	3.43%	1
Police Education/Training Savings	$	11,511	3.43%	1
Municipal Court Technology Fund	$	23,769	3.43%	1
Municipal Court Building Security Fund	$	808	3.43%	1
2019 Series A	$	5,368	3.43%	1
Total - Frost National Bank	**$**	**6,622,079**		
INVESTMENTS:				
General Fund Certificate of Deposit	$	26,498	3.5000%	365
Texpool for Streets	$	11,597	4.3606%	1
Texpool (breakout by fund on following page)	$	6,963,957		1

01-1125	General Fund	2,169,261.56
01-1124	MEIA	4,785,951.67
02-1115	Garbage	432.15
17-1115	Debt Service	-
19-1116	Capital Project Street	8,312.08
09-1115	Asset Seizure Fund - State	-
Total All Funds		6,963,957.46

$	**13,624,132**	

Fund	Fund Title	Balance	Interest Earned	YTD 2025	
1	General Fund	7,022,272.78	108,656.48	$	209,527
2	Garbage Fund	30,103.57	225.40	$	484
4	Asset Seazure-Fed	395.98	3.01	$	6
6	School Crossing Guard	16,076.86	122.14	$	263
8	Police Donation	1,869.05	14.20	$	31
9	Asset Seazure-State	438.14	3.33	$	7
10	Police Education/Traning	11,511.29	76.15	$	157
14	Court Technology	23,768.64	180.57	$	388
15	Court Building Security	807.54	6.13	$	13
16	Hotel/Motel	180,278.76	2,830.28	$	5,465
17	Debt Services	-	-	$	-
18	WCCPD	294,591.12	4,014.88	$	9,225
19	Capital Projects Streets	47,334.86	340.17	$	724
21	2019 Series A	5,367.52	1,358.63	$	5,368
99	Pooled Cash	5,989,315.70	-	$	-
	Total	**13,624,131.81**	**117,831.37**		**231,657.50**

TEXPOOL

	2018-19	2019-20	2020-21	2021-22	2022-23	2023-24	2024-25
October	2.1377%	1.9115%	0.1335%	0.0354%	2.9336%	5.3589%	4.9130%
November	2.1980%	1.6774%	0.1231%	0.0381%	3.6110%	5.3724%	4.7302%
December	2.2687%	1.6226%	0.0909%	0.0376%	4.1765%	5.3694%	4.5610%
January	2.3892%	1.1000%	0.0793%	0.0376%	4.2443%	5.3455%	4.3919%
February	2.3972%	1.5800%	0.0431%	0.0632%	4.4991%	5.3251%	4.3555%
March	2.4164%	1.5900%	0.0187%	0.1536%	4.6108%	5.3350%	4.3345%
April	2.4344%	0.4800%	0.1010%	0.3000%	4.7984%	5.3200%	
May	2.4005%	0.2800%	0.1010%	0.5800%	5.0035%	5.3200%	
June	2.3812%	0.2200%	0.0174%	0.9400%	5.0543%	5.3200%	
July	2.3876%	0.2100%	0.0189%	1.4600%	5.1238%	5.3173%	
August	2.1715%	0.1800%	0.0222%	2.1400%	5.3047%	5.2977%	
September	2.1635%	0.1500%	0.0279%	2.3500%	5.3218%	5.1637%	

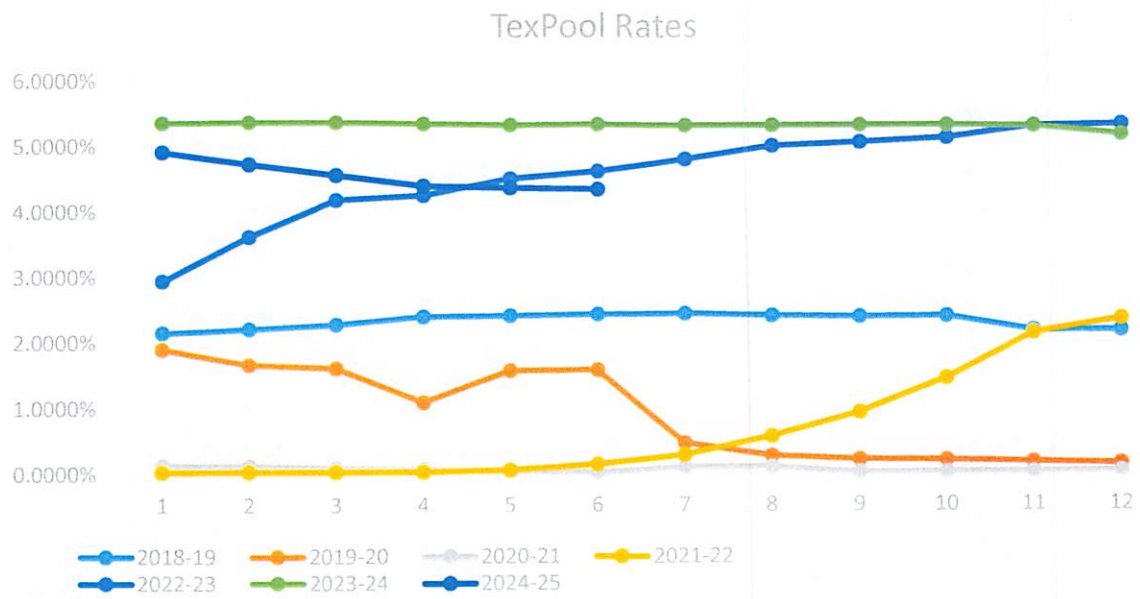

Frost CD

	2018-19	2019-20	2020-21	2021-22	2022-23	2023-24	2024-25
July	1.2000%	1.6000%	0.1000%	0.1000%	4.3600%	3.8000%	3.5000%

No graph for this CD.

FROST - ALL ACCOUNTS

	2018-19	2019-20	2020-21	2021-22	2022-23	2023-24	2024-25
October	1.8200%	1.5700%	0.0100%	0.0100%	0.0100%	5.5800%	3.9600%
November	1.9000%	1.3300%	0.0100%	0.0100%	0.0100%	5.5800%	3.6800%
December	1.9900%	1.3000%	0.0100%	0.0100%	0.0100%	4.5800%	3.6100%
January	2.0300%	1.1900%	0.0100%	0.0100%	3.5900%	4.5600%	3.4900%
February	2.0300%	1.1800%	0.0100%	0.0100%	3.9600%	4.5300%	3.4100%
March	2.0300%	1.1900%	0.0100%	0.0200%	3.9600%	4.5800%	3.4000%
April	2.0600%	0.1200%	0.0100%	0.0200%	4.0200%	4.4400%	
May	2.0300%	0.0100%	0.0100%	0.0200%	4.2600%	4.4400%	
June	2.0300%	0.0100%	0.0100%	0.0200%	4.4600%	4.4500%	
July	1.9600%	0.0100%	0.0100%	0.0350%	4.4900%	4.4500%	
August	1.8700%	0.0100%	0.0100%	0.0400%	4.5500%	4.4200%	
September	1.7200%	0.0100%	0.0100%	0.0700%	4.5900%	4.2400%	

A RESOLUTION OF THE CITY OF WINDCREST, TEXAS, CITY COUNCIL AUTHORIZING THE SALE OF ENGINE 187 BRAVO PREVIOUSLY UTILIZED BY THE WINDCREST FIRE DEPARTMENT

WHEREAS, the City of Windcrest is a home-rule municipality located within Bexar County, Texas; and

WHEREAS, the City of Windcrest is vested with the authority to approve or deny the sale of city owned property; and

WHEREAS, the Windcrest Fire Department has established a Fleet Replacement Plan for FY23 through FY28; and

WHEREAS, the City of Windcrest has approved the purchase of a Mini Pumper Fire Vehicle on April 15, 2024, in replacement of the Engine 187 Bravo; and

WHEREAS, the City of Windcrest finds that Engine 187 Bravo is no longer needed or essential to services and should be sold; and

WHEREAS, the City of Windcrest believes that there is no need to keep the Engine 187 Bravo, as the new Mini Pumper Fire Vehicle replaces the need; and

WHEREAS, the Windcrest City Council finds that such sale of this vehicle is in the best interest of the Windcrest Fire Department, the City, and its residents; and

WHEREAS, the City Council of the City of Windcrest finds and determines that the meeting at which this resolution was passed was open to the public and that public notice of the time, place, and purpose of said meeting was given as required by the Texas Open Meetings Act, Chapter 551, Texas Government Code.

NOW THEREFORE, BE IT RESOLVED BY THE CITY COUNCIL OF THE CITY OF WINDCREST, TEXAS that the City Council

1. The Windcrest City Council has authorized the sale of the Engine 187 Bravo.
2. The City manager is authorized to take such steps that are necessary to find an acceptable purchaser for Engine 187 Bravo and bring back to the city council for approval the sale to a specific purchaser.

DULY PASSED AND APPROVED, on the _____ day of _____, 2025 at a regular meeting of the City Council of the City of , Texas, which was held in compliance

Pending CC Approval

with the Open Meetings Act, Gov't. Code §551.001, et. Seq. at which meeting a quorum was present and voting.

CITY OF WINDCREST, TEXAS

_____
Dan Reese, *Mayor*

ATTEST:

_____
Rachel C. Dominguez, TRMC
City Secretary

APPROVED:

_____
Ryan S. Henry, *City Attorney*

Pending CC Approval

A RESOLUTION OF THE CITY OF WINDCREST, TEXAS, CITY COUNCIL DESIGNATING VACANT CITY-OWNED PROPERTY LOCATED ON THE NORTHWEST CORNER OF CRESTWAY DRIVE AND JIM SEAL DRIVE AS PARKLAND

WHEREAS, the City Council of the City of Windcrest (the "City Council") has previously determined that it is in the interest of the citizens to cooperate with Bexar County in facilitating the installation of a community pool; and

WHEREAS, the City-owned property located on the Northwest Corner of Crestway Drive and Jim Seal Drive, more particularly described as 6.54 acres situated in Lot 1, Block 113, Windcrest Subdivision, Unit 25, City of Windcrest, Bexar County, Texas, and situated in Tract M, New City Block 13808, City of Windcrest, Bexar County, Texas, is currently vacant; and

WHEREAS, the City Council has had the property appraised, and desires to designate the land for park and recreational use, to include but not be limited to the use of a public community pool, in order to preserve its use as park and recreation land only; and

WHEREAS, the City Council of the City of Windcrest finds and determines that the meeting at which this resolution was passed was open to the public and that public notice of the time, place, and purpose of said meeting was given as required by the Texas Open Meetings Act, Chapter 551, Texas Government Code.

NOW THEREFORE, BE IT RESOLVED BY THE CITY COUNCIL OF THE CITY OF WINDCREST, TEXAS that:

1. **The City Council of the City of Windcrest hereby designates the City-owned property located at the Northwest Corner of Crestway Drive and Jim Seal Drive to be used as park or recreational land, and to specifically include its use for a community pool.**

2. **The property being designated is 6.54 acres situated in Lot 1, Block 113, Windcrest Subdivision, Unit 25, City of Windcrest, Bexar County, Texas and situated in Tract M, New City Block 13808, City of Windcrest Bexar County, Texas, which is represented in Attachment A to this resolution and incorporated for all purposes**

Pending CC Approval

DULY PASSED AND APPROVED, on the 21st day of April 2025 at a regular meeting of the City Council of the City of , Texas, which was held in compliance with the Open Meetings Act, Gov't. Code §551.001, et. Seq. at which meeting a quorum was present and voting.

CITY OF WINDCREST, TEXAS

_____
Dan Reese, *Mayor*

ATTEST:

_____
Rachel C. Dominguez, TRMC
City Secretary

APPROVED:

_____
Ryan S. Henry, *City Attorney*

Pending CC Approval

SUBJECT
Takas Windcrest
Jim Seal Dr
Jim Seal Dr
Midtown Cleaners

AN ORDINANCE OF THE CITY OF WINDCREST, TEXAS, GRANTING A SPECIAL USE PERMIT TO ALLOW AN OIL CHANGE FACILITY LOCATED AT 5331 WALZEM RD., WINDCREST, TEXAS, A USE NOT SPECIFICALLY LISTED IN THE USE REGULATIONS OF ARTICLE III- DISTRICTS, GENERAL ZONING, DIVISION 5, SECTION 113-190 USE REGULATIONS OF THE CITY OF WINDCREST CODE OF ORDINANCES; ESTABLISHING CONDITIONS FOR SAID PERMIT; AND PROVIDING FOR FINDINGS OF FACT, A CUMULATIVE CLAUSE, SEVERABILITY, AND EFFECTIVE DATE.

WHEREAS, the City of Windcrest is a Texas home rule municipality that has codified its regulations and enforcement, including adoption of zoning ordinances and zoning maps; and

WHEREAS, the property located at 5331 Walzem Rd., Windcrest Tx 78218, consisting of Lot 1 block 98 Windcrest unit 24 subdivision recorded in volume 7000 page 170 deed and plat records Bexar County, Texas . It is currently zoned B-1; and

WHEREAS, the City has received an application, the relevant portions of which are attached as Exhibit A (the "***Application***"), for a specific use permit for an Oil Change Facility Services use, specifically, a Take 5 Oil Change (the "***Proposed Use***"), to be located on the Property, all as more particularly shown in Exhibit A; and

WHEREAS, Section 113-321 of the City of Windcrest city ordinances provides that uses designated as requiring a Specific Use Permit ("***SUP***") are so classified because the City Council has found that these uses may, because of their nature or intensity, be incompatible with other permitted uses in the same or adjacent district or may be compatible only with mitigation imposed through additional standards and conditions attached to the use; and

WHEREAS, the City Council determines that the SUP application for the Proposed Use is in conformance with the City of Windcrest Code of Ordinances; and

WHEREAS, the City Council desires that the City's appearance remain well kept, healthy, and safe for public use; and

WHEREAS, the City Council has determined that certain businesses are beneficial to the commerce and overall betterment of the City;

WHEREAS, the City Council finds that granting a special use permit for an oil change facility does not cause any detriment to the City's appearance and the safety of citiziens, including both real and personal property; and

WHEREAS, the City Council has received the report and recommendation to approve the SUP application from the City of Windcrest Planning and Zoning Commission regarding the Application; and

Pending CC Approval

WHEREAS, the City Council requires the following conditions and safeguards for the purpose of protecting other properties within the same or abutting zoning district (the "***Conditions***"):

(A) All permit applications submitted for the Property are subject to the requirements of the Code of Ordinances of the City of Windcrest, Texas (the "***Code***").

(B) Approval of this SUP does not constitute approval of any building permit, or any other required permit or authorization associated with the Property.

(C) The Proposed Use may not have a negative effect on the health, safety, or welfare of the public or surrounding properties.

(D) Approval of this SUP does not authorize any use other than the Proposed Use as applied for and the SUP may not be enlarged, extended, or relocated unless City Council approves a new specific use permit.

(E) The Property may only be developed substantially in conformance with the plans and specifications contained in the Application.

(F) The Property may only be used for the Proposed Use in accordance with the following:

(1) Use of the Property may only be conducted as a "Take 5 Oil Change" Oil Change Facility consistent with the branding, signage, and other operational protocols and policies of Take 5 Oil Change.

(2) The Property must be subdivided as a lot separate from the remainder of the B-1 zoning district, whether by replat, amending plat, or other process permitted under the code of ordinances, substantially in the configuration shown in the Site Plan.

(3) The Property must be developed and configured substantially as shown in Exhibit A – SUP application with attachments.

(G) This Specific Use Permit may be revoked pursuant to Section 113-326 of the City of Windcrest ordinances; and

WHEREAS, the Planning and Zoning Commission of the City of Windcrest, Texas, and the City Council of the City of Windcrest, Texas, in compliance with the Charter, State law, the City of Windcrest Code of Ordinances, have given the requisite notices by mailing, publication and otherwise, and after holding a due hearing and affording a full and fair hearing to all persons interested, the City Council, having received the final report of the Planning and Zoning Commission and having determined that the proposed zoning change will be harmonious with

Pending CC Approval

existing buildings, structures, and uses on abutting and nearby properties in the vicinity of the Property in accordance with the Code of Ordinances of the City, is of the opinion that the Property should be zoned as set forth herein; and

WHEREAS, the City Council finds and determines that adoption of this Ordinance promotes the health, safety, and welfare of the public; and

WHEREAS, the City Council of the City of Windcrest finds and determines that the meeting at which this Ordinance was passed was open to the public and that public notice of the time, place, and purpose of said meeting was given as required by the Texas Open Meetings Act, Chapter 551, Texas Government Code

NOW, THEREFORE, BE IT ORDAINED BY THE CITY COUNCIL OF THE CITY OF WINDREST, TEXAS that

I.
ENACTMENT

A. All of the above recitals are incorporated herein for all purposes.
B. The SUP requested in the Application is granted, and they possess a special use permit to allow the Proposed Use, subject to the Conditions set for in this ordinance; and
C. That this ordinance grants special use permit to Take 5 Oil Change, for construction and operation of an oil change facility in a B-1 zoning district, Neighborhoof Business District, at 5331 Walzem Rd., Windcrest Texas as an authorized use.
D. All other requirements applicable to a B-1 Zoning district apply.

II.
CUMULATIVE CLAUSE

That this Ordinance shall be cumulative of all provisions of the City of Windcrest, except where the provisions of this Ordinance are in direct conflict with the provisions of such other ordinance, in which event the conflicting provisions of such other ordinance are hereby repealed, while leaving the remainder of such other ordinance intact. To the extent of any conflict, this Ordinance is controlling.

III.
SEVERABILITY

That is hereby declared to be the intention of the City Council of the City of Windcrest. that the phrases, clauses, sentences, paragraphs, and sections of this Ordinance are severable, and if any phrase, clause, sentence, paragraph, or section of this Ordinance should be declared unconstitutional or invalid by final judgment or decree of any court of competent jurisdiction, such unconstitutionality or invalidity shall not affect any of the remaining phrases, clauses, sentences, paragraphs, or sections of the Ordinances, since the same would have been enacted by the City

Pending Approval

Council without incorporation in this ordinance of any such unconstitutional or invalid phrases, sentences, paragraphs, or sections.

IV.
PROPER NOTICE AND MEETING

It is hereby officially found and determined that the meeting at which this Ordinance was adopted was open to the public and that public notice of the time, place, and purpose of said meeting was given as required by the Texas Open Meetings Act, Chapter 551, Texas Government Code.

DULY PASSED ON FIRST READING, on the _____ day of _____, 2024 at a regular meeting of the City Council of the City of Windcrest, Texas, which was held in compliance with the Texas Open Meetings Act, Chapter 551, Texas Government Code, at which meeting a quorum was present and voting.

DULY PASSED AND APPROVED, on the _____ day of _____, 2024 at a regular meeting of the City Council of the City of Windcrest, Texas, which was held in compliance with the Texas Open Meetings Act, Chapter 551, Texas Government Code, at which meeting a quorum was present and voting.

CITY OF WINDCREST, TEXAS:

_____
Dan Reese, *Mayor*

ATTEST:

_____
Rachel C. Dominguez, *City Secretary*

APPROVED:

_____
Ryan S. Henry, *City Attorney*

Pending CC Approval

AN ORDINANCE OF THE CITY OF WINDCREST, TEXAS AMENDING CHAPTER 12 – FIRE PREVENTION AND PROTECTION, ARTICLE II – FIRE MARSHAL, OF THE CITY OF WINDCREST CODE OF ORDINANCES, TO AMEND SECTION 12-21 BY ADDING A DESIGNEE, AND PROVIDING FOR FINDINGS OF FACT, A CUMULATIVE CLAUSE, SEVERABILITY, AND EFFECTIVE DATE.

WHEREAS, the City of Windcrest is a home-rule municipality located within Bexar County, Texas; and

WHEREAS, the City of Windcrest, as a home rule municipality, derives its powers exclusively from its home rule charter and is limited in authority only by express provisions of the Texas Constitution and the State statutes; and

WHEREAS, the City Council of the City of Windcrest desires to amend Chapter 12 Fire prevention and protection, article II – Fire Marshal, General Code of Ordinances of the City of Windcrest to Amend 12-21 Office created; responsibilities; and

WHEREAS, the City believes it should adjust the definition of Fire Marshal to allow for the designation of a qualified officer to assume the duties of Fire Marshal if necessary; and

WHEREAS, the City Council of the City of Windcrest finds and determines that the adoption of this Ordinance promotes the health, safety, and welfare of the public; and

WHEREAS, the City believes that allowing the Fire Marshal to appoint a designee will allow for a more efficient process, keep the City and citizens safe; and

WHEREAS, the City wants to ensure that the duties of the Fire Marshal can still be carried out if the current Fire Marshal was unable to do their work for a short period of time, without the City Council having to appoint a new Fire Marshal; and

WHEREAS, the City Council of the City of Windcrest finds and determines that the meeting at which this Ordinance was passed was open to the public and that public notice of the time, place and purpose of said meeting was given as required by the Texas Open Meetings Act, Chapter 551, Texas Government Code;

NOW, THEREFORE, BE IT ORDAINED BY THE CITY COUNCIL OF THE CITY OF WINDCREST, TEXAS THAT

I.

Pending CC Approval

ENACTMENT

Chapter 18 licenses, permits and business regulations, article II Business Regulations, Code of Ordinances, City of Windcrest, Texas is amended as set forth below, with insertions indicated by underlines (e.g. underlines) and deletions indicated by strikethroughs (e.g. ~~strikethroughs~~):

Section 12-21:

The office of fire marshal is hereby created. The fire marshal or their qualified designee shall administer enforce, and carry out the applicable provisions of this article relating to the duties and responsibilities of the city fire marshal. Such office shall be independent of other city departments except that the fire marshal shall work closely with the fire chief, but has no authority, responsibility, or leadership role over the fire department or its personnel. The fire marshal shall report directly to the mayor and the city council.

II.
FINDINGS OF FACT

The foregoing recitals are incorporated into this Ordinance by reference as findings of fact as if expressly set forth herein.

III.
CUMULATIVE CLAUSE

This Ordinance is cumulative of all provisions of the Code of Ordinances of the City of Windcrest, except to the extent the provisions of this Ordinance are in direct conflict with the provisions of any other ordinance, in which event the conflicting provisions of such other ordinance are hereby repealed, while leaving the remainder of such other ordinance intact. To the extent of any conflict, this Ordinance is controlling.

III.
SEVERABILITY

The City Council of the City of Windcrest intends that the phrases, clauses, sentences, paragraphs, and sections of this Ordinance are severable, and if any phrase, clause, sentence, paragraph, or section of this Ordinance should be declared unconstitutional or invalid by final judgment or decree of any court of competent jurisdiction, such unconstitutionality or invalidity shall not affect any of the remaining phrases, clauses, sentences, paragraphs, or sections of the Ordinance, since the same would have been enacted by the City Council without incorporation in this ordinance of any such unconstitutional or invalid phrases, sentences, paragraphs, or sections.

IV.
EFFECTIVE DATE

Pending CC Approval

This Ordinance is effective as of the date of adoption on second reading.

DULY PASSED ON FIRST READING, on the ____day of _____, 2025, at a regular meeting of the City Council of the City of Windcrest, Texas, which was held in compliance with the Texas Open Meetings Act, Chapter 551, Texas Government Code, at which meeting a quorum was present and voting.

DULY PASSED AND APPROVED, on the _____ day of _____, 2025 at a regular meeting of the City Council of the City of Windcrest, Texas, which was held in compliance with the Texas Open Meetings Act, Chapter 551, Texas Government Code, at which meeting a quorum was present and voting.

CITY OF WINDCREST, TEXAS:

_____
Dan Reese, Mayor

ATTEST:

_____
Rachel C. Dominguez, TRMC
City Secretary

APPROVED:

_____
Ryan Henry, City Attorney

Pending CC Approval

AN ORDINANCE OF THE CITY OF WINDCREST, TEXAS AMENDING CHAPTER 1 OF THE CODE OF ORDINANCES TO ADOPT SECTION 1-12 ADDING A 3RD PARTY REVIEW FEES PROVISION; AND PROVIDING FOR FINDINGS OF FACT, A CUMULATIVE CLAUSE, SEVERABILITY, AND EFFECTIVE DATE.

WHEREAS, the City of Windcrest is a home-rule municipality located within Bexar County, Texas; and

WHEREAS, the City of Windcrest, as a home rule municipality, derives its powers exclusively from its home rule charter and is limited in authority only by express provisions of the Texas Constitution and state statutes; and

WHEREAS, the City may assess fees for services rendered provided such fees are not inconsistent with the Texas Constitution, state law, or the City's Charter; and

WHEREAS, the City assesses third-party review fees for legal, engineering, inspection and other services performed in connection with applications; and

WHEREAS, the City Council of the City of Windcrest desires to amend Chapter 1, Code of Ordinances of the City of Windcrest to recover fees related to third-party review by third-party providers for applications as set forth in this Ordinance; and

WHEREAS, the City finds that it is in the best interests of the public to not upcharge for fees associated with third-party reviews; and

WHEREAS, the City Council of the City of Windcrest finds and determines that the adoption of this Ordinance promotes the health, safety, and welfare of the public; and

WHEREAS, the City Council of the City of Windcrest finds and determines that the meeting at which this Ordinance was passed was open to the public and that public notice of the time, place and purpose of said meeting was given as required by the Texas Open Meetings Act, Chapter 551, Texas Government Code;

NOW, THEREFORE, BE IT ORDAINED BY THE CITY COUNCIL OF THE CITY OF WINDCREST, TEXAS THAT:

I.
ENACTMENT

The Code of Ordinances of the City of Windcrest, Texas is amended to add Section 1-12, reading as follows:

Sec. 1-12. – Third party review fees; deposit required; outside review fees.

Pending CC Approval

(a) For any ordinance establishing a third-party review of applications, applicants will be charged for all third-party review fees incurred by the city at the cost incurred by the city.

(b) A deposit of fifty (50) percent of the estimated initial review cost will be required prior to the start of any work performed by the city. Should the amount of the third-party review fees exceed the amount of the deposit, the applicant will be required to deposit additional funds based on an estimate provided by the city, and the city will not be obligated to perform any further work until such additional funds are deposited.

(c) Failure to deposit additional funds for third-party review fees as required by the city within ten (10) business days of notice of the required additional deposit will result in expiration of the original application.

(d) Should an applicant seek third-party review of an application outside of the city under Section 247.002 of the Texas Local Government Code, said applicant will be responsible for the fees associated with said third-party review.

II.
FINDINGS OF FACT

The recitals above are incorporated into this Ordinance by reference as findings of fact as if expressly set forth herein.

III.
CUMULATIVE CLAUSE

This Ordinance is cumulative of all provisions of the City of Windcrest, except to the extent the provisions of this Ordinance are in direct conflict with the provisions of any other ordinance, in which event the conflicting provisions of such other ordinance are hereby repealed, while leaving the remainder of such other ordinance intact. To the extent of any conflict, this Ordinance is controlling.

III.
SEVERABILITY

The City Council of the City of Windcrest intends that the phrases, clauses, sentences, paragraphs, and sections of this Ordinance are severable, and if any phrase, clause, sentence, paragraph, or section of this Ordinance should be declared unconstitutional or invalid by final judgment or decree of any court of competent jurisdiction, such unconstitutionality or invalidity shall not affect any of the remaining phrases, clauses, sentences, paragraphs, or sections of the Ordinances, since the same would have been enacted by the City Council without incorporation in this ordinance of any such unconstitutional or invalid phrases, sentences, paragraphs, or sections.

Pending CC Approval

IV.
EFFECTIVE DATE

This Ordinance is effective as of the date of adoption on second reading.

DULY PASSED ON FIRST READING, on the _____ day of _____, 2025, at a regular meeting of the City Council of the City of Windcrest, Texas, which was held in compliance with the Texas Open Meetings Act, Chapter 551, Texas Government Code, at which meeting a quorum was present and voting.

DULY PASSED AND APPROVED, on the _____ day of _____, 2025, at a regular meeting of the City Council of the City of Windcrest, Texas, which was held in compliance with the Texas Open Meetings Act, Chapter 551, Texas Government Code, at which meeting a quorum was present and voting.

CITY OF WINDCREST, TEXAS

_____
Dan Reese, Mayor

ATTEST:

_____
Rachel Dominguez, City Secretary

APPROVED:

_____
Ryan Henry, City Attorney

Pending CC Approval